Chapter 3

CIRCULATION ELEMENT

TABLE OF CONTENTS

I. PURPOSE & INTENT 72
II. BACKGROUND 72
III. FUNDAMENTAL CONCEPTS FOR CIRCULATION PLANNING 73
- Access and Mobility 73
- Capacity and Connectivity 74
- Level of Service 74
- Peak Hour and Average Daily Traffic Volumes 75
- Intersection Capacity 75
- Air Quality and Safety Issues 75

IV. CONGESTION MANAGEMENT 76
V. EXISTING ROADWAY SYSTEM WITHIN THE SANTA CLARITA VALLEY 77
- Regional Access 77
- Streets and Highways 77
- Arterial Highways and Collectors in the Santa Clarita Valley 78
- Cross-Valley Connector 79
- Major Roadway Improvements Recently Completed or Underway 80
- Peak Hour Traffic Conditions 80
- Transportation Management System 80
- Neighborhood Traffic Management 81
- Street Maintenance 81

VI. METHODOLOGY FOR TRAFFIC ANALYSIS 81
VII. RECOMMENDATIONS FOR STREET AND HIGHWAY SYSTEM 82
- Level of Service Standard 82
- Revised Roadway Designations 82
- Standard Cross Sections 91
- Truck Route Plan 98
- Additional Access for Castaic 98
- San Francisquito Canyon Road Extension 98

VIII. CONSTRAINTS AND OPPORTUNITIES FOR IMPROVING ROADWAYS 99
- Funding for Roadways 99
- Travel Demand Management 99
- Parking Management 100
- Intersection Improvements 100
- Land Use Strategies 100
- Congestion Relief 100

IX. RAIL SERVICE 101
- Rail Freight Service 101
- Metrolink Service 101
- Amtrak California 102
- High Speed Rail Development 102

X. AIR SERVICE 103
XI. PUBLIC TRANSIT AND OTHER TRANSPORTATION SERVICES 103
- City of Santa Clarita Transit 103
- Commuter Transit Service 105
- Special Transit Services 105
- Bus Stop Improvement Program 105
- Park-and-ride Lots 105
- School Bus Transportation 106
- Taxi Service 106

XII. NON-MOTORIZED TRAVEL MODES 106
- Planning for Bikeways 106
- Regional Bikeway Planning 107
- City of Santa Clarita Bikeway Planning 107
- Bicycle Parking and Support Facilities 108
- Pedestrian Circulation System 108
- Hiking Trails 110

XIII. HEALTHY STREETS FOR WALKABLE COMMUNITIES 110
XIV. CIRCULATION SYSTEMS, CARBON EMISSIONS, AND GLOBAL CLIMATE CHANGE 112
XV. SUMMARY OF CIRCULATION NEEDS 113
XVI. GOALS, OBJECTIVES, AND POLICIES 114
XVII. IMPLEMENTATION OF THE CIRCULATION ELEMENT 123

LIST OF TABLES

Table C-1: Level of Service Standards for Urban Streets 75
Table C-2: Highway Plan Roadways in the Planning Area 84
Table C-3: Roadway Improvements Needed for Build-Out of Highway Plan 86
Table C-4: Gaps in the Inter-Jurisdictional Bikeway Network - Santa Clarita Valley 106

LIST OF FIGURES

Figure C-3: Standard Roadway Cross Sections 91

Circulation Element

I. PURPOSE & INTENT

The Santa Clarita Valley's circulation system provides vital connections linking neighborhoods, services, and employment centers throughout the community and the region. A comprehensive transportation network of roadways, multi-use trails and bike paths, bus transit, and commuter rail provides mobility options to Valley residents and businesses. Planning for the ultimate location and capacity of circulation improvements will also enhance economic strength and quality of life in the Valley.

The Circulation Element plans for the continued development of efficient, cost-effective and comprehensive transportation systems that are consistent with regional plans, local needs, and the Valley's community character. The Circulation Element complements and supports the Land Use Element, insofar as a cohesive land use pattern cannot be achieved without adequate circulation. The Circulation Element identifies and promotes a variety of techniques for improving mobility that go beyond planning for construction of new streets and highways. These techniques include development of alternative travel modes and support facilities; increased efficiency and capacity of existing systems through management strategies; and coordination of land use planning with transportation planning by promoting concentrated, mixed-use development near transit facilities.

II. BACKGROUND

The California Government Code describes conditions and data that must be researched, analyzed, and discussed in a Circulation Element. Section 65302(b) states that the General Plan shall include the general location and extent of existing and proposed major thoroughfares, transportation routes, terminals and other local public utilities and facilities. The City and County are also required to coordinate the Circulation Element provisions with regional transportation plans, as set forth in Government Code Sections 65103(f) and 65080. Regional plans affecting the Santa Clarita Valley include those of the California Department of Transportation (Caltrans); the Regional Mobility Plan prepared by the Southern California Association of Governments (SCAG); the Los Angeles Metropolitan Transportation Authority's (MTA or Metro) Congestion Management Program and bikeway strategic plan; Santa Clarita Transit's Transportation Development Plan; and Los Angeles County's Airport Land Use Plan. The Circulation Element has been developed in conformance with these regional transportation programs.

The proposed street and highway network is based on projected development permitted by the Land Use Element. Policies have been included requiring coordination of land use and circulation planning in order to reduce vehicle trips by mixing land uses, locating higher densities within proximity of public transit, and providing greater access and connectivity for non-motorized travel modes. In addition, implementation of the Circulation Element will assist the City and County in achieving their land use goals for job creation, because the economic viability of new commercial and industrial development throughout the Valley will be improved with better access.

The Circulation Element is also consistent with other elements of the General Plan and Area Plan. Projected noise levels as contained in the Noise Element are based upon traffic volumes estimated for the Circulation Element. By planning for a smooth-flowing transportation system, the potential of shorter trip lengths, and alternative travel modes, the Circulation Element encourages reduction of vehicle emissions as envisioned by the Conservation and Open Space Element. Trails and bikeways are addressed in the Circulation Element as well as in the Conservation and Open Space Element. Policies to ensure that the circulation system is safe, such as provision of emergency access and maintenance of evacuation routes, are consistent with provisions of the Safety Element. Finally, the provision of an adequate circulation system to support residential development is consistent with the Housing Element.

The Circulation Element has been developed based on analysis of existing conditions in the Valley, future development in both City and County areas, and anticipated growth. A variety of data were used to quantify and characterize existing and future projected traffic volumes and conditions along roadway links and at key intersections. A traffic model was developed to distribute and analyze projected trips based on development projections. Based on this information, recommendations were formulated

for the roadway designations shown on the Circulation Map, and for goals, policies and programs included in the Circulation Element.

III. FUNDAMENTAL CONCEPTS FOR CIRCULATION PLANNING

To provide greater clarity on circulation issues and needs affecting the street and highway system, several key terms are discussed in this section.

Access and Mobility

The Valley's system of streets and highways consists of a range of transportation facilities that serve two basic functions for motorists: mobility, and land access. Mobility means providing the facilities for motorists to travel between points of activity, and access means providing for entrance and egress to a particular land parcel or development site at the final destination. A circulation network is composed of facilities that emphasize the mobility or access functions to different degrees. For example, freeways provide limited access but good mobility between access points, while local neighborhood streets provide access to every residence but a low degree of mobility, due to slow speeds and frequent stops. The streets and highways in the Valley have been classified as follows, based on differing degrees of mobility and access:

- Freeways. Freeways provide mobility with very limited access. Generally, federal guidelines call for at least one mile of separation between freeway access ramps. Within the Santa Clarita Valley, Interstate 5 (I-5, or the Golden State Freeway) and State Route 14 (SR-14, or the Antelope Valley Freeway) are classified as freeways; both are under the jurisdiction of Caltrans for maintenance and traffic control.

- Expressways. Expressways refer to State routes that provide a high degree of mobility and limited access, but do not meet the design standards for freeways. Access to expressways can be either by grade separated crossings or by at-grade intersections, and state guidelines call for at least one mile of separation between signalized intersections. Within the planning area, State Route 126 west of I-5 is classified as an expressway.

- Arterial streets (Highways). Arterials provide a high degree of mobility as major traffic carriers with access to collectors and some local streets. These roadways are referred to as Highways in the County Highway Plan, a component of the Countywide General Plan, and in the City of Santa Clarita General Plan. Arterials are typically the widest streets in terms of right-of-way and pavement width, and they generally have the highest speed limits. Arterials may be further classified as major or secondary, based on their width and capacity.

- Collector streets. Collectors connect local streets with arterials and also provide access to adjacent land uses, thus balancing mobility with access. While a collector street is not as wide as an arterial, it is often wider than local streets in terms of right-of-way and lane width.

- Local streets. Local streets are intended to provide access to adjacent land uses exclusively, and are not designed or intended to carry through-traffic or allow for high speeds. Typically, residential streets within neighborhoods are designed as local streets.

Roadway systems are designed with different types of streets to balance mobility and access needs in an efficient manner. The different functions of various roadways require specific methods of analysis and design, because each street type must meet different traffic capacity and access requirements. While it might be considered desirable to provide both access and mobility on all roadways, most residents would not like their local neighborhood streets to be designed to carry large volumes of through traffic. Conversely, congestion problems occur when a street designed to provide mobility is expected to provide for access as well. Local streets typically require numerous driveways to move vehicles off the street and onto adjacent properties. When too many access points are provided on a street intended for mobility, friction and conflicts occur between those vehicles needing access and other vehicles using the facility for mobility. Therefore, the designation of streets for different uses has both a functional and economic value, and must be considered in developing a viable circulation plan.

Capacity and Connectivity

In evaluating and planning for a functional circulation system, both capacity and connectivity must also be considered. Capacity refers to the ability of the street system, including roadways and intersections, to adequately serve the traffic demand. It is a measure of how well the mobility needs of the Valley are met. Connectivity is defined as a measure of how well various parts of the Valley are linked, and how easy it is to move between different parts of the Valley.

A poorly connected transportation system can make even nearby destinations functionally far apart. Conversely, a well-connected system can ease travel between destinations by shortening on-the-ground distances. The street arrangement with the greatest connectivity is a grid pattern, which provides many intersections and routes. Subdivision patterns that contain numerous cul-de-sacs and looped streets provide low connectivity, increasing dependence on the automobile to reach destinations that may be relatively nearby "as the crow flies." One of the defining features of urban sprawl is lack of connectivity, which requires more driving time to reach destinations.

Within the Santa Clarita Valley, connectivity of the street network is interrupted by topographic constraints, including rolling terrain, canyons, and the Santa Clara River. In addition, the prevalent subdivision pattern, comprised of local cul-de-sac streets with limited connectivity, acts to funnel all traffic onto collector and arterial streets. As a result, regional traffic is concentrated on a limited number of arterial streets. Projects such as completion of the Cross-Valley Connector, the Via Princessa gap closure, and plans to create a new north-south connection through the center of the Valley (Santa Clarita Parkway), are examples of projects intended to increase connectivity.

The capacity of a roadway is affected by several factors, including the street's width, the number of cross streets, the amount of green time given to the street at each signal (signal timing), the presence or absence of on-street parking, the number of turn lanes at each intersection, and the number of driveways. Intersection capacity depends on the lane configuration, meaning the number of through lanes and turn lanes, their width and alignment, and the signal timing. Daily capacity analysis is a general measure of a street's ability to carry traffic; this indicator is typically used to identify roadways which are nearing or exceeding their capacity, and which should be the subject of further peak hour analysis. Traffic operations are usually described by a roadway's or intersection's level of service during peak traffic hours.

Planners and traffic engineers are faced with competing demands when designing street patterns. In order to increase traffic flow and reduce congestion, they need to increase roadway capacity and limit access; however, in order to increase connectivity and public safety, they need to slow traffic down to allow for turn movements, bikeways, and pedestrian crossings. The design solutions to these challenges are complex, but many potential problems can be solved by creating mixed-use communities that provide alternative travel modes between homes, employment, schools, shopping, and services.

Level of Service

The level of service (LOS) designation of a roadway or intersection indicates whether the capacity is adequate to handle the volume of traffic using the facility. The LOS provided by street segments and intersections are dependent upon traffic volumes, number of lanes, whether the roadway is divided, the number of access points (driveways and cross streets) along the roadway, and the lane configuration at intersections. LOS is a term used to describe prevailing conditions and their effect on traffic. It is a qualitative measure which describes operational conditions within a traffic stream, generally in terms of such factors as travel speed, travel time, traffic interruptions, freedom to maneuver, safety, driving comfort, and convenience. The LOS is represented alphabetically, with LOS A representing the least impacted roadway, and LOS E representing a roadway operating at the maximum capacity. LOS F represents long queues of traffic and unstable flows, and is generally considered to be unsatisfactory (see Table C-1).

Although LOS is an important factor in transportation planning, it is not the only or even the most important criterion used in all cases. Depending on the area being planned, other factors may be considered as having priority over expedited movement of vehicles. For example, in pedestrian-oriented commercial areas, high-speed vehicle movements could be detrimental to the desired character of development, and traffic-calming measures may be used to slow vehicle speeds. In all portions of the planning area, traffic LOS must be weighed against other community pri-

Table C-1: Level of Service Standards for Urban Streets

LOS	Description of Traffic Conditions
A	LOS "A" describes primarily free-flow operations at average travel speeds, usually about 90 percent of the Free Flow Speed (FFS) for the given street class. Vehicles are completely unimpeded in their ability to maneuver within the traffic stream. Control delay at signalized intersections is normal.
B	LOS "B" describes reasonably unimpeded operations at average travel speeds, usually about 70 percent of the FFS for the street class. Vehicles are completely unimpeded in their ability to maneuver with the traffic stream. Control delay at signalized intersections is minimal.
C	LOS "C" describes stable operations; however, ability to maneuver and change lanes in midblock locations may be more restricted that at LOS "B," and longer queues, adverse signal coordination, or both may contribute to lower average travel speeds of about 50 percent of the FFS for the street class.
D	LOS "D" borders on a range in which small increases in flow may cause substantial increases in delay and decreases in travel speed. LOS "D" may be due to adverse signal progression, inappropriate signal timing, high volumes, or a combination of these factors. Average travel speeds are about 40 percent of FFS.
E	LOS "E" is characterized by significant delays and average travel speeds of 33 percent or less of the FFS. Such operations are caused by a combination of adverse progression, high signal density, high volumes, extensive delays at critical intersections, and inappropriate signal timing.
F	LOS "F" is characterized by urban street flow at extremely low speeds, typically one-third to one-fourth of the FFS. Intersection congestion is likely at critical signalized locations, with high delays, high volumes, and extensive queuing.

orities such as quality of life and environmental resource protection, in order to achieve a balanced approach to transportation and land use planning.

Peak Hour and Average Daily Traffic Volumes

Average Daily Traffic (ADT) is a measurement of the average number of vehicles that travel a segment of roadway during a 24-hour period. The ADT is a useful benchmark for determining roadway capacities, and is typically used for long-range planning analysis. Peak hour information, which is the highest volume of traffic to pass over a road in a one-hour period, allows for a more detailed method of evaluating traffic conditions along roadways and intersections, and is used whenever operational analysis is required.

Intersection Capacity

The LOS along urban streets is typically dependent on the quality of traffic flow at the intersections along that roadway. Usually bottlenecks and delays start at intersections rather than on the roadway between them. The LOS at intersections is based on factors such as delay time or volume to capacity ratios, with specific methods of analysis utilized for signalized and unsignalized intersections.

Air Quality and Safety Issues

In addition to vehicular mobility and access issues, the Circulation Element addresses broader issues of public health and safety as they relate to the circulation network. The greatest source of air pollutants in the Valley is generated from transportation (mobile sources). Because of its geographical location and meteorological conditions, the Santa Clarita Valley records some of the highest ozone readings in the South Coast Air Basin. Although ozone concentrations are generated largely from pollutants transported from outside the Valley, locally-generated air pollutants are also an issue for Valley residents due to increased automobile traffic associated with growth. Localized carbon monoxide concentrations are found at congested intersections, especially in winter. Concentrations of fine airborne particulates also result from locally generated emissions, such as increased truck traffic.

Land use patterns and the density of development directly affect the amount of air pollution that is generated from mobile sources within a community. Land uses that are segregated increase the number of motor vehicle trips and associated air pollutant emissions, because it is inconvenient or impossible to walk or bicycle between destinations or public transit is not available. Communities in which the ratio of jobs to housing units is not balanced result in additional vehicle miles traveled by commuters who must drive to employment centers. When communities are

designed to mix residential with commercial, business, and employment uses, the trip length and frequency of motor vehicle use can be reduced. Goals and policies included the Land Use, Conservation, and Circulation Elements have been coordinated to address the related issues of traffic, land use patterns, and air quality.

A recent book on the impacts of urban sprawl highlights the enormous toll that automobile accidents and pedestrian fatalities take on public health, stating that "Automobiles claim more than 40,000 lives each year in the United States. Automobile crashes are the leading cause of death among people from one year to 24 years old, cause about 3.4 million nonfatal injuries each year, and cost an estimated $200 billion annually."[1] Designing a roadway system that protects public safety is of paramount importance, and this issue is addressed in the goals and policies of the Circulation Element. The issue of safety for bicyclists and pedestrians is also a primary concern for developing a healthy and safe circulation system for the Valley, and the maps and policies of the Circulation Element have been prepared to address safe pedestrian routes and bikeways.

IV. CONGESTION MANAGEMENT

The Congestion Management Program (CMP) was enacted by the California Legislature in 1989 to improve traffic congestion in urban areas. The program became effective with the passage of Proposition 111 in 1990, which also increased the State gas tax. Funds generated by Proposition 111 are available to cities and counties for regional road improvements, provided these agencies are in compliance with CMP requirements. The intent of the legislation was to link transportation, land use, and air quality decisions by addressing the impact of local growth on the regional transportation system. State statute requires that a CMP be developed, adopted, and updated biennially for every county that includes an urbanized area, which shall include every city and county government within that county. Therefore, the City of Santa Clarita and County of Los Angeles must comply with CMP requirements in developing a circulation plan for the Santa Clarita Valley.

Under the legislation regional agencies are designated within each county to prepare and administer the CMP for agencies within that county. Each local planning agency included in the CMP has the following responsibilities:

- Assisting in monitoring the roadways designated within the CMP system;
- Adopting and implementing a trip reduction and travel demand ordinance;
- Analyzing the impacts of local land use decisions on the regional transportation system; and
- Preparing annual deficiency plans for portions of the CMP system where LOS standards are not maintained.

In Los Angeles County, the CMP agency is the Los Angeles County Metropolitan Transportation Authority (Metro). Metro has the responsibility to review compliance with the CMP by agencies under its jurisdiction. For any agency out of compliance, after receiving notice and after a correction period, a portion of state gas tax funds may be withheld if compliance is not achieved. In addition, compliance with the CMP is necessary to preserve eligibility for state and federal funding for transportation projects.

Metro adopted the County's first CMP in 1992, and completed its most recent update in 2004. The statute requires that all state highways and principal arterials be included within the CMP roadway system. Within the Santa Clarita Valley, the following roadways are designated as CMP roadways:

- Interstate 5 (I-5, or Golden State Freeway);
- State Route 14 (SR-14, or Antelope Valley Freeway);
- Sierra Highway from Newhall Avenue (formerly San Fernando Road) to SR-14 at Red Rover Mine Road;
- Magic Mountain Parkway from I-5 to Railroad Avenue (formerly San Fernando Road);
- Railroad Avenue/Newhall Avenue (formerly San Fernando Road) from Magic Mountain Parkway to SR-14; and
- State Route 126 west of I-5.

1 Frumkin, Howard, Lawrence Frank, Richard Jackson. *Urban Sprawl and Public Health: Designing, Planning and Building for Healthy Communities*. Washinton, Island Press, 2005, page 110.

The 2004 CMP noted that both I-5 and SR-14 within the planning area demonstrate traditional commute patterns, with congestion flowing into Los Angeles and the San Fernando Valley in the morning and a reverse flow in the afternoon. The CMP indicates that all CMP roadways in the Santa Clarita Valley except SR-14 operate at a LOS D or better during a.m. and p.m. peak hours. Portions of SR-14 are reported to operate at LOS E during a.m. and p.m. peak hours. However, the 2004 CMP indicates that both I-5 and SR-14 traffic conditions have improved since the first CMP was completed in 1991, due to the completion of widening projects on these routes.

Preparation of a General Plan update constitutes a project that must be evaluated for CMP compliance. If a new General Plan is found to further impact traffic conditions on CMP roadways, mitigations may be required. The Los Angeles County CMP allows a local jurisdiction to define acceptable levels of service up to LOS E.

The 2004 CMP adopted by Metro found that, while 46 of the County's cities experienced very limited growth in the planning period, most of the County's growth has occurred in 10 jurisdictions, of which the Santa Clarita Valley is ranked fourth in terms of growth. Sixteen percent of the County's growth occurred in the San Fernando Valley and North County areas, including residential, commercial, and office growth sectors.

Various strategies are available to local jurisdictions to mitigate CMP traffic impacts, including constructing new roadway improvements, managing traffic flow through signal improvements and trip reduction measures, and land use strategies such as locating higher density uses in proximity to public transit. The 2004 CMP found that only three percent of the total mobility benefit throughout the County was a result of land use measures used by local agencies. In the Santa Clarita Valley, the City and County have an opportunity, with the *One Valley One Vision* (OVOV) planning effort, to increase the coordination of land use planning with transportation improvements in order to increase mobility benefits.

The traffic analysis conducted for the OVOV planning effort addressed these issues, and its conclusions are presented in the traffic report. Based on the traffic model, all roadway segments within the planning area that are designated as CMP roadways will operate at LOS E or better at build-out of the City's General Plan and the County's Area Plan. Therefore, the Circulation Element is consistent with the CMP as required by State law.

V. EXISTING ROADWAY SYSTEM WITHIN THE SANTA CLARITA VALLEY

Regional Access

Regional access to the Santa Clarita Valley is provided by two primary freeway corridors: Interstate 5 (I-5, or the Golden State Freeway) traverses the planning area in a northwesterly direction and is delineated with eight travel lanes; and State Route 14 (SR-14, or the Antelope Valley Freeway) traverses the planning area in a northeasterly direction and accommodates between four and 10 travel lanes. I-5 provides an important link between the southern and northern portions of the United States, and also serves as a vital link for commuter traffic between Santa Clarita Valley communities and Los Angeles. SR-14 is also used by a significant amount of commuter traffic, as well as providing a regional link between the Los Angeles basin and the high desert communities of Palmdale and Lancaster. I-5 and SR-14 converge in the Newhall Pass, located south of the southerly planning area boundary. Newhall Pass has traditionally been one of the most congested regional corridors in Southern California and is in need of additional capacity improvements.

Secondary regional access is provided to motorists in the western portion of the planning area via State Route 126 (SR-126), which extends from the City of Ventura east to I-5. East of I-5, SR-126 was once designated along portions of Magic Mountain Parkway and San Fernando Road (now known as Railroad Avenue and Newhall Avenue) between I-5 and SR-14; however, these roadways were turned over to the City in 2002 and no longer serve as a State highway alignment.

Streets and Highways

Streets and highways within the planning area have been classified into the following categories, based on their function and design:

- **Major Highways** are arterials with at least six travel lanes for high mobility, designed with limited vehicular access to driveways and cross streets. The typical road section includes a raised landscaped median with left

turn pockets at intersections. When fully improved and operating at LOS E, major highways can accommodate approximately 54,000 vehicles per day. Street sections may include striped, on-street bike lanes or separated bike paths.

- **Secondary Highways** are arterials with an ultimate design section of four travel lanes, designed for high mobility and with limited vehicular access from driveways and cross streets. The typical road section includes a median with left turn pockets provided at intersections. Secondary highways are designed to service both through traffic, and to collect traffic from collector and local streets. When fully improved and operating at LOS E, secondary highways can accommodate approximately 36,000 vehicles per day.

- **Limited Secondary Highways** are arterials with more limited mobility and greater access, with an ultimate roadway design section of two travel lanes and with partial control of vehicular and pedestrian access to the roadway from driveways, cross streets, and crosswalks. The roadway is usually undivided and may accommodate limited parking activity and left turn pockets at major intersections. These streets are designed to accommodate moderate volumes of traffic and provide local access to major and secondary highways. When fully improved and operating at LOS E, these streets can accommodate approximately 18,000 vehicles per day.

- **Collector Streets** are roadways which have an ultimate roadway design section of two travel lanes with limited vehicular access to the roadway from driveways and cross streets. The roadway is usually undivided and does not always accommodate left turn pockets at intersections. Collector streets are designed to provide both access and limited mobility, servicing local traffic from residential, commercial, and industrial uses and providing access to the arterial roadway system. Collector streets are not depicted on the adopted Highway Plan. When fully improved and operating at LOS E, collectors can accommodate approximately 15,000 vehicles per day.

- **Local streets** are streets designed for full access and limited mobility, and may include residential streets, private streets, service roads, and public alleys. For the purposes of circulation planning at the General Plan level, local streets are not included on the adopted Highway Plan. However, policies have been included in the Circulation Element to ensure that local streets contribute to healthy, safe neighborhoods.

Arterial Highways and Collectors in the Santa Clarita Valley

Arterial highways traversing the Santa Clarita Valley provide connections between communities and to outlying areas. Bouquet Canyon Road connects the Santa Clarita Valley to the Antelope Valley through the Angeles National Forest. Sierra Highway, which generally parallels the SR-14 corridor, also provides connection to the Antelope Valley as well as a non-freeway connection between the Santa Clarita Valley and the Los Angeles Basin, through the Newhall Pass. The combination of Valencia Boulevard and Soledad Canyon Road currently provides the primary east-west connection between I-5 and SR-14 through the Santa Clarita Valley. Soledad Canyon Road also provides the primary non-freeway connection between the City of Santa Clarita and the communities of Agua Dulce and Acton. Escondido Canyon Road, Crown Valley Road, and Santiago Road also serve the Acton community and provide north-south connections between Soledad Canyon Road and SR-14. Agua Dulce Canyon Road, which connects Soledad Canyon Road to Sierra Highway, is the main north-south facility in the Agua Dulce community. Escondido Canyon Road, running east and west, also connects the communities of Acton and Agua Dulce.

Other canyon routes connect the Santa Clarita Valley to the Antelope Valley, including Lake Hughes Road and San Francisquito Canyon Road. Sand Canyon Road and Placerita Canyon Road connect the Santa Clarita Valley to the northeast San Fernando Valley communities of Sunland and Tujunga, via their connection with Little Tujunga Road through the Angeles National Forest.

The City recently renamed San Fernando Road as Railroad Avenue between Magic Mountain Parkway and Lyons Avenue. Between Lyons Avenue and Newhall Avenue, through downtown Newhall, San Fernando Road was renamed as Main Street. Between Newhall Avenue and its terminus at SR-14, San Fernando Road was renamed to Newhall Avenue and was restriped to increase roadway capacity from four lanes to six, which significantly improved traffic circulation through the intersection at Newhall Avenue and Sierra

Highway. In downtown Newhall, between Lyons Avenue and Pine Street, Main Street was restriped from four travel lanes to two lanes with on-street parking as part of the Downtown Newhall Specific Plan improvements in 2007. To accommodate north-south through traffic in this area, Railroad Avenue in downtown Newhall was expanded to accommodate four travel lanes.

Other major new roadways, planned to increase both connectivity and capacity of the arterial system, were included in the prior Circulation Element and are also included in this update, including the following arterial roadway segments:

- The Via Princessa gap closure between its current westerly terminus near Oak Ridge Drive and its current easterly terminus near Isabella Parkway;
- The extension of Magic Mountain Parkway from the intersection of Bouquet Canyon Road/Railroad Avenue south to Via Princessa;
- Santa Clarita Parkway, a new north-south arterial that extends from SR-14 at Placerita Canyon Road to Bouquet Canyon Road;
- Long Canyon Road, a new north-south arterial in the west side of the valley, extends from SR-126 to a westerly extension of Valencia Boulevard; and
- Dockweiler Drive from Railroad Avenue to Sierra Highway.

A complete list of planned new roadways and roadway extensions as depicted in the Highway Plan is provided in Section VII.

Based on existing conditions traffic data collected for approximately 100 selected major segments of County and City roadway network throughout the Santa Clarita Valley, all links studied are currently operating at LOS E or better except for the following:

- Soledad Canyon Road between Bouquet Canyon Road and Commuter Way;
- Whites Canyon Road between Soledad Canyon Road and Pleasantdale Street;
- Lyons Avenue between Orchard Village Road and Newhall Avenue; and
- Newhall Avenue between Lyons Avenue and Main Street.

The existing deficiencies noted above are being addressed by this Circulation Element update through a combination of measures, such as the completion of future roadways as identified in the Highway Plan, development of alternative travel modes and support facilities, increased efficiency of existing systems through management strategies, and coordination of land use planning with transportation planning by promoting concentrated, mixed-use development near transit facilities. The traffic model developed for the *One Valley One Vision* (OVOV) planning effort was used to evaluate projected traffic conditions for both the existing and proposed City General Plan and County Area Plan Circulation Elements at build-out of the land uses envisioned by both documents. This analysis concluded that build-out under the existing City General Plan and County Area Plan Circulation Elements and Land Use Elements would result in worse traffic congestion than under the City General Plan and County Area Plan Circulation Elements developed through the OVOV planning effort, because more roadway segments would operate at unacceptable levels of service under the prior plans than under the updated plans. Further information on this analysis is contained in the traffic study.

Cross-Valley Connector

In order to provide greater connectivity and capacity for east-west traffic across the Santa Clarita Valley, the City and County have worked in partnership to complete the Cross-Valley Connector. The 8.5-mile system of arterial road, bridges, and intersections provides a seamless connection between Newhall Ranch Road and Golden Valley Road, and a direct connection between the I-5/SR-126 junction and the SR-14/Golden Valley Road interchange. In addition to serving auto and truck traffic in the Valley with an ultimate width of six to eight travel lanes, the Cross-Valley Connector was designed to include a Class 1 bike path adjacent to the roadway and a landscaped median.

Completion in 2010, the Cross-Valley Connector is projected to substantially reduce traffic volumes on Soledad Canyon Road and other major arterials in the City.

Major Roadway Improvements Recently Completed or Underway

A recent phase of construction for the Cross-Valley Connector was the "gap closure", construction of a one-mile segment linking I-5/SR-126 with Copper Hill Drive/Rye Canyon Road. Completed in 2007, this portion of the roadway provides multi-modal access to the area's largest employment centers (1,000 companies and 50,000 jobs).

In a cooperative effort between Newhall Land, Caltrans, Metro, the County and the City, expansion of the interchange of I-5 and Magic Mountain Parkway began in 2007 and was completed in 2010. The project will help relieve existing and future traffic congestion by widening the freeway on- and off-ramps and Magic Mountain Parkway.

The Hasley Canyon Road interchange at I-5 is also currently being reconstructed in a cooperative effort between the County, Caltrans, Metro, and Newhall Land. Construction began in 2007 and was completed in 2009. The project will significantly improve traffic conditions at the interchange and includes constructing a new bridge over the I-5 freeway, building modern roundabouts on the east and west sides of the freeway, and providing additional ramps for freeway access.

Construction of new bridges along Sierra Highway over the railroad between Canyon Park Boulevard and Flying Tiger Drive was initiated in 2007 and completed in 2009. This project replaced the northbound bridge and rehabilitated the southbound bridge on Sierra Highway, eliminating the gap between the two bridges. The new bridge will provide wider traffic lanes and shared lanes for bicycles and pedestrians.

A new bridge planned over the Santa Clara River as part of the Cross-Valley Connector was completed in 2010. This bridge will provide a seamless connection between Golden Valley Road and Newhall Ranch Road.

Peak Hour Traffic Conditions

The Santa Clarita Valley experiences typical suburban traffic patterns, which are characterized by traffic volumes that peak during the AM and PM commute periods. Based on existing conditions traffic data and traffic model forecast data for 23 key intersections within the Valley, the current AM and PM peak hour conditions will continue to worsen over time absent any changes to the current circulation system. This Circulation Element update addresses the existing and potential future deficiencies through a combination of land use and transportation planning, as noted in prior sections.

Transportation Management System

The City has completed the first stage of an Intelligent Transportation Management System (ITMS) project. Through the use of real-time video and other traffic-related information, ITMS interconnects 172 traffic signals to the new Traffic Operation Center located at City Hall. There, City staff can adjust signal problems, minimize congestion and provide additional capacity on alternate routes in case of an accident or other incidents. Staff can quickly be alerted to situations that require the dispatch of a maintenance crew or law enforcement personnel. Subsequent stages of the project will increase the number of roadways and intersections included in the system, with the ultimate goal of including all signalized intersections within the Santa Clarita Valley.

The County Department of Public Works is in the process of evaluating communications devices to enable traffic signals in the unincorporated areas of the Valley to be monitored and controlled from their Traffic Management Center in Alhambra. This traffic signal control system provides for continuous monitoring of conditions and will provide once-per-second monitoring of traffic signals. The system enables traffic signal timing to be controlled and coordinated from the Traffic Management Center.

The County's Information Exchange Network (IEN) is an advanced traffic management system and network capable of sharing information and control of various traffic control systems and field devices between agencies. The IEN is currently being deployed Countywide and will improve regional traffic flow through the exchange of traffic signal data among multiple agencies. The County and City are currently discussing connecting the City's traffic control system to the IEN, which will allow for a coordinated response to traffic congestion and incidents.

In addition, the City and County have been implementing signal timing along major arterials, using signal synchronization to coordinate signals with each other in an effort to improve vehicle progression and reduce traffic congestion. The City retimes and synchronizes approximately one-third of its traffic signals every year, which means that all traffic signals are evaluated and retimed within a three-year period.

Neighborhood Traffic Management

As traffic volumes and congestion increase on arterial roadways, some drivers attempt to reduce travel times by traveling alternate routes using local neighborhood streets. This neighborhood intrusion by "cut-through" traffic has become a concern in some residential areas. The City takes action when necessary to minimize intrusion of regional cut-through traffic in residential neighborhoods through traffic management and traffic calming strategies, including the use of circles, chokers, and diverters. The County has an established neighborhood traffic management program to make neighborhoods safer for pedestrians, bicyclists, residents and the motoring public.

Street Maintenance

The City Public Works Department currently manages a $5 million annual program for overlay and slurry-seal of streets. Approximately seven miles of street pavement per year is maintained under this program. Private streets are required to be maintained by property owners or homeowners associations.

Some portions of the planning area require additional street maintenance due to substandard street sections. In particular, older and more rural canyon areas were developed with substandard streets and lack curbs and gutters for drainage, and sidewalks. As a result, stormwater runoff undermines the pavement, and maintenance costs are increased. Road improvements will be required to upgrade street systems in these areas.

VI. METHODOLOGY FOR TRAFFIC ANALYSIS

The following steps were followed in developing the roadway component of the Circulation Element:

1. Documentation of existing conditions and assembling the data base;
2. Update of the City/County traffic model for the Santa Clarita Valley used to forecast future usage of existing and planned circulation routes;
3. Identification of problems, opportunities and issues on the roadway network;
4. Testing and evaluation of alternative improvement plans; and
5. Selection and refinement of the recommended circulation plan.

The Santa Clarita Valley's existing roadway network is illustrated on Figure C-1. Average daily traffic volumes for arterials within the Valley were obtained through traffic counts, to assess existing levels of service. Both capacity and connectivity of the network were evaluated.

The traffic engineers utilized a computerized traffic demand model, the Santa Clarita Valley Consolidated Traffic Model (SCVCTM), which is jointly maintained by the City of Santa Clarita and the County of Los Angeles, to analyze the roadway system and develop a circulation plan. For modeling purposes, the planning area is divided into 455 traffic analysis zones (TAZ's). The model used a software program comparable to the regional modeling done by the Southern California Association of Governments (SCAG) and the County's Congestion Management Program, in order to assure consistency with regional plans.

Traffic analysis with a traffic demand model involves four general steps: 1) specification of the roadway network; 2) calculation of vehicle trip generation amounts for uses within each TAZ; 3) distribution of these vehicle trips to destination points; and 4) assignment of vehicle trips to specific roadway segments. Based on this analysis, the model indicates whether planned roadway widths will be adequate to handle projected traffic volumes, and where capacity problems will occur. The process requires a model that has been calibrated to existing conditions, and the SCVCTM underwent a comprehensive update and recalibration in 2004. With this calibrated model, the traffic engineers performed several different model runs based on various assumptions. The model was run to predict traffic volumes at build-out of the land uses permitted by the City and County's Land Use Elements.

Based on the traffic model analysis, the traffic engineers identified several needed improvements to the street and highway system. Traffic issues identified through the public input process were also considered and evaluated. These traffic issues and needs have been addressed in the Circulation Plan and the goals and policies section of the element.

Once the traffic model was completed and run, it became necessary to make certain adjustments to the Land Use Plan and the road network to achieve acceptable levels of service at General Plan and Area Plan build-out for most roadways. In some cases, adjustments were made to the ultimate right-of-way for specific roadway links. The final recommended Highway Plan is shown on Figure C-2, and is discussed in further detail in Section VII.

VII. RECOMMENDATIONS FOR STREET AND HIGHWAY SYSTEM

Level of Service Standard

The Countywide General Plan does not specify an acceptable Level of Service (LOS) for the purpose of long-range planning; however, in conformance with the Congestion Management Program, the preferred maximum acceptable LOS on arterial roads (i.e., major, secondary, and limited secondary highways) within the planning area is LOS E. The City strives to achieve LOS D or better on highways to the extent feasible given right-of-way and physical constraints, while recognizing that in higher density urban areas there is generally a tradeoff between vehicle LOS and other factors such as pedestrian mobility; therefore, LOS F may be necessary at limited locations to implement the City's General Plan. In residential neighborhoods, the City and County desire conditions of LOS C or better.

Revised Roadway Designations

Designations of the following roadway segments were recommended to be reclassified as a result of the traffic analysis:

1. Lake Hughes Road from Ridge Route Road to Angeles National Forest Boundary – Reclassify from a major highway to a limited secondary highway.
2. Vasquez Canyon Road from Bouquet Canyon Road to Sierra Highway – Reclassify from a secondary highway to a limited secondary highway.
3. Sand Canyon Road from the Santa Clarita City boundary to Sierra Highway – Reclassify from a major highway to a secondary highway along existing alignment.
4. Shadow Pines Boulevard/Tick Canyon Road from Grandifloras Road to Davenport Road – Reclassify from a secondary highway to a limited secondary highway.
5. Bouquet Canyon Road from Plum Canyon Road to Vasquez Canyon Road – Reclassify from a major highway to a secondary highway.
6. Skyline Ranch Road from Plum Canyon Road to Sierra Highway – Reclassify planned major highway to a secondary highway.
7. Valencia Boulevard/Potrero Canyon Road from the Newhall Ranch/Stevenson Ranch boundary to the planned Long Canyon Road – Reclassify planned secondary highway to a major highway.
8. Long Canyon Road from the planned Santa Clara River Bridge to the planned Valencia Boulevard/Potrero Canyon Road – Reclassify planned secondary highway to a major highway.
9. Pico Canyon Road from the Newhall Ranch/Stevenson Ranch boundary to Valencia Boulevard – Reclassify planned secondary highway to a major highway.
10. Jakes Way from Canyon Park Boulevard to the planned Lost Canyon Road extension – Add classification for the existing roadway as a limited secondary highway.
11. McBean Parkway from Copper Hill Drive to San Francisquito Canyon Road – Reclassify planned secondary highway to a limited secondary highway.
12. San Fransisquito Canyon Road from the planned extension of McBean Parkway to the Angeles National Forest – Reclassify from a secondary highway to a limited secondary highway.

13. Lost Canyon Road from Jakes Way to Sand Canyon Road – Reclassify planned major highway to a secondary highway.

The following roadway segments were recommended to be removed from the Highway Plan as a result of the traffic analysis:

1. 16th Street from Newhall Avenue to Railroad Avenue – Remove planned secondary highway.

2. Sloan Canyon Road from Hillcrest Parkway to Quail Valley Road – Remove planned limited secondary highway.

3. Castaic Road from Parker Road to Newhall Ranch Road – Remove planned secondary highway.

4. Biscailuz Drive from The Old Road to the previously planned extension of Castaic Road – Remove planned secondary highway.

5. Landmark Village (VTTM 53108) Spine Road – Remove planned secondary highway.

6. "A" Street (Mallory Drive) from Poe Parkway to Valencia Boulevard – Remove planned secondary highway.

7. Poe Parkway from Stevenson Ranch Parkway to Valencia Boulevard – Remove secondary (existing and planned) highway.

8. Cruzan Mesa Road from Whites Canyon Road to Sierra Highway – Remove planned limited secondary highway.

The following roadway alignments were recommended to be realigned as a result of the traffic analysis:

1. Sand Canyon Road from the Santa Clarita City boundary to Sierra Highway – Realign planned secondary highway along the existing driven roadway.

2. Long Canyon Road/Potrero Canyon Road/Valencia Boulevard at planned intersection – Realign to make Long Canyon Road/Valencia Boulevard the continuous roadway.

3. Chiquito Canyon Road/Long Canyon Road at State Route 126 – Revise alignments to create a continuous north/south roadway.

4. Whites Canyon Road from Plum Canyon Road to Vasquez Canyon Road – Revise alignment to connect from Plum Canyon Road to Sierra Highway (as the proposed Skyline Ranch Road).

Table C-2 indicates the designation of all General Plan roadways within the planning area. It should be noted that local and collector streets are not included on the Highway Plan, which contains only major and secondary highways, expressways, and parkways.

Table C-2: Highway Plan Roadways in the Planning Area

Roadway Classification	Roadway Segments in Planning Area
Expressways	SR-126
Major Highways	Avenue Scott (from Rye Canyon to Avenue Tibbitts) Avenue Tibbitts Bouquet Canyon Road (from Plum Canyon Road to Magic Mountain Parkway) Castaic Road (from Lake Hughes Road to Parker Road) Commerce Center Drive Copper Hill Drive (from Newhall Ranch Road to Seco Canyon Road) Golden Valley Road (from Newhall Ranch Road to SR-14 freeway) Hasley Canyon Road (from Commerce Center Drive to I-5 freeway) Lake Hughes Road (from The Old Road to Ridge Route Road) Long Canyon Road (from SR-126 to Valencia Boulevard) Lost Canyon Road (from Jakes Way to Via Princessa) Lyons Avenue Magic Mountain Parkway (from Commerce Center Drive to Via Princessa) McBean Parkway (from I-5 freeway to Copper Hill Drive) Newhall Avenue (from Railroad Avenue to SR-14 freeway) Newhall Ranch Road Orchard Village Road Parker Road (from The Old Road to Castaic Road) Pico Canyon Road Plum Canyon Road Railroad Avenue (from Magic Mountain Parkway to Lyons Avenue) Rye Canyon Road Sand Canyon Road (from Soledad Canyon Road to Lost Canyon Road) Santa Clarita Parkway (from Bouquet Canyon Road to Sierra Highway) Sierra Highway Soledad Canyon Road Stevenson Ranch Parkway The Old Road (from Hasley Canyon Road to Lyons Avenue) The Old Road (from Calgrove Boulevard to Sierra Highway) Valencia Boulevard Via Princessa (from Wiley Canyon Road to Lost Canyon Road) Whites Canyon Road Wiley Canyon Road (from Lyons Avenue to Via Princessa)

Roadway Classification	Roadway Segments in Planning Area
Secondary Highways	16th Street (from Orchard Village Road to Newhall Avenue) Agua Dulce Canyon Road Avenue Scott (from Avenue Tibbitts to McBean Parkway) Bouquet Canyon Road (from Plum Canyon Road to Angeles National Forest boundary) Calgrove Boulevard Canyon Park Boulevard Copper Hill Drive (from Seco Canyon Road to Bouquet Canyon Road) Davenport Road Decoro Drive Dickason Drive Dockweiler Drive Escondido Canyon Road Golden Valley Road (from Newhall Ranch Road to Plum Canyon Road) Golden Valley Road (from SR-14 freeway to Via Princessa) Haskell Canyon Road (from Copper Hill Drive to Bouquet Canyon Road) Hasley Canyon Road (from Del Valle Road to Commerce Center Drive) Hillcrest Parkway Long Canyon Road (from Chiquito Canyon Road to SR-126) Lost Canyon Road (from Jakes Way to Sand Canyon Road) Magic Mountain Parkway (from Long Canyon Road to Commerce Center Drive) Newhall Avenue (from 16th Street to Railroad Avenue) Placerita Canyon Road (from Sierra Highway to Sand Canyon Road) Potrero Canyon Road Railroad Avenue (from Lyons Avenue to Newhall Avenue) Ridge Route Road (from approximately ¾ mile north of Northlake Hills elementary school to Castaic Road) Rockwell Canyon Road Sand Canyon Road (from Sierra Highway to Soledad Canyon Road) Seco Canyon (from Copper Hill Drive to Bouquet Canyon Road) Shadow Pines Boulevard Skyline Ranch Road Sloan Canyon Road (from The Old Road to Quail Valley Road) The Old Road (from Oak Valley Road to Hasley Canyon Road) The Old Road (from Pico Canyon Road to Calgrove Boulevard) Tourney Road Valley Street Via Princessa (from Lost Canyon Road to Golden Valley Road) Wiley Canyon Road (from Lyons Avenue to Calgrove Boulevard)
Limited Secondary Highways	Bouquet Canyon (from Angeles National Forest Boundary to Elizabeth Lake Road) Chiquito Canyon Road (from Del Valle Road to Long Canyon Road) Del Valle Road (from Chiquito Canyon Road to Hasley Canyon Road) Hasley Canyon Road (from Sloan Canyon Road to Del Valle Road) Jakes Way Lake Hughes Road (from Ridge Route Road to Pine Canyon Road) Lost Canyon Road (from Sand Canyon Road to Oak Springs Canyon Road) McBean Parkway (from San Francisquito Canyon Road to Copper Hill Drive) Ridge Route Road (from Templin Highway to approximately ¾ mile north of Northlake Hills elementary school) San Francisquito Canyon Road (from McBean Parkway to Elizabeth Lake Road) Sand Canyon Road (from Lost Canyon Road to Little Tujunga Canyon Road) Seco Canyon (from Discovery Ridge Drive to Copper Hill Drive) Sloan Canyon Road (from Hillcrest Parkway to Hasley Canyon Road) Tick Canyon Road Tournament Road Vasquez Canyon Road
Parkways	Henry Mayo Drive (from Commerce Center Drive to The Old Road)

A complete listing of the future roadway improvements needed to implement the recommended Highway Plan is provided in Table C-3.

Table C-3: Roadway Improvements Needed for Build-Out of Highway Plan

Roadway / Segment	Improvement	Comments
Agua Dulce Canyon Road		
Between Sierra Highway and Escondido Canyon Road	Widen roadway from 2 lanes to a 4 lane Secondary Highway	---
Between Escondido Canyon Road and Davenport Road	Construct new 4 lane Secondary Highway	Gap closure segment
Between Davenport Road and Soledad Canyon Road	Widen roadway from 2 lanes to a 4 lane Secondary Highway	---
Avenue Scott		
Between Rye Canyon Road and Avenue Tibbitts	Re-stripe roadway from 4 lanes to 6 lanes	---
Avenue Tibbitts		
Between Avenue Scott and Avenue Hopkins	Re-stripe roadway from 4 lanes to 6 lanes	---
Between Avenue Hopkins and Magic Mountain Parkway	Construct new 6 lane Major Highway	Includes new bridge over the Santa Clara River
Bouquet Canyon Road		
Between Angeles National Forest and Plum Canyon Road	Widen roadway from 2 lanes to a 4 lane Secondary Highway	Includes realignment in the Copper Hill Drive area
Between Plum Canyon and future Santa Clarita Parkway	Re-stripe roadway from 4 lanes to 6 lanes	Will lose the existing Class II bike lane due to re-striping
Between future Santa Clarita Parkway and Seco Canyon Road	Re-stripe roadway from 5 lanes to 6 lanes	Will lose the existing Class II bike lane due to re-striping
Between Seco Canyon Road and Espuella Drive	Widen roadway from 6 lanes to an 8 lane Major Highway	Includes bride widening
Between Soledad Canyon Road and Magic Mountain Parkway	Re-stripe roadway from 4 lanes to 6 lanes	---
Castaic Road		
Between Lake Hughes Road and Ridge Route Road	Re-stripe roadway from 4 lanes to 6 lanes	---
Commerce Center Drive		
Between Henry Mayo Drive and Magic Mountain Parkway	Construct new 6 lane Major Highway	Includes new bridge over the Santa Clara River
Copper Hill Drive		
Between Avenida Rancho Tesoro and San Francisquito Creek Bridge	Re-stripe roadway from 4 lanes to 6 lanes	---
Between San Francisquito Creek Bridge and McBean Parkway	Widen roadway from 4 lanes to a 6 lane Major Highway	Includes widening bridge over the San Francisquito Creek
Davenport Road		
Between Sierra Highway and Agua Dulce Canyon Road	Widen roadway from 2 lanes to a 4 lane Secondary Highway	---
Dockweiler Drive		
Between Sierra Highway and Agua Dulce Canyon Road	Widen roadway from 2 lanes to a 4 lane Secondary Highway	---

Roadway / Segment	Improvement	Comments
Dockweiler Drive		
Between Railroad Avenue and Leonard Tree Lane	Construct new 4 lane Secondary Highway	---
Between Leonard Tree Lane and Sierra Highway	Re-stripe roadway from 2 lanes to 4 lanes	Will lose the existing on-street parking due to re-striping
Escondido Canyon Road		
East of Agua Dulce Canyon Road	Widen roadway from 2 lanes to a 4 lane Secondary Highway	---
Golden Valley Road		
Between Plum Canyon Road and Dorothy Street	Re-stripe roadway from 2 lanes to 4 lanes	---
Between Dorothy Street and Newhall Ranch Road	Construct new 4 lane Secondary Highway	---
Between Newhall Ranch Road and Valley Center Drive	Construct new 6 lane Major Highway	Includes new bridge over the Santa Clara River
Between Valley Center Drive and Center Pointe Parkway	Re-stripe roadway from 4 lanes to 6 lanes	---
Between Center Pointe Parkway and Sierra Highway	Widen roadway from 4 lanes to a 6 lane Major Highway	---
Between SR-14 freeway and Via Princessa	Construct new 4 lane Secondary Highway	---
Haskell Canyon Road		
Between Copper Hill Drive and Grovepark Drive/Ridgegrove Drive	Re-stripe roadway from 2 lanes to 4 lanes	---
Henry Mayo Drive		
Between Commerce Center Drive and The Old Road	Widen roadway from 2 lanes to a 4 lane Parkway	---
Lake Hughes Road		
Between I-5 freeway and Castaic Road	Re-stripe roadway from 4 lanes to 6 lanes	---
Long Canyon Road (future)		
Between Chiquito Canyon Road and SR-126	Construct new 4 lane Secondary Highway	---
Between SR-126 and Valencia Boulevard	Construct new 6 lane Major Highway	Includes new bridge over the Santa Clara River
Lost Canyon Road		
Between Sand Canyon Road and La Veda Avenue	Widen roadway from 2 lanes to a 4 lane Secondary Highway	---
Between La Veda Avenue and Jakes Way	Construct new 4 lane Secondary Highway	---
Between Jakes Way and railroad bridge	Construct new 6 lane Major Highway	---
Between railroad bridge and Via Princessa	Re-stripe roadway from 4 lanes to 6 lanes	---
Lyons Avenue		
Between Orchard Village Road and Railroad Avenue	Re-stripe roadway from 4 lanes to 6 lanes	Will lose the existing on-street parking due to re-striping
Magic Mountain Parkway		
Between Long Canyon Road and Commerce Center Drive	Construct new 4 lane Secondary Highway	---

Roadway / Segment	Improvement	Comments
Between Commerce Center Drive and Westridge Parkway	Construct new 6 lane Major Highway	---
Between Westridge Parkway and Six Flags Magic Mountain	Construct new 8 lane Major Highway	---
Between Six Flags Magic Mountain and I-5 freeway	Widen roadway from 4 lanes to an 8 lane Major Highway	---
Between I-5 freeway and Auto Center Drive	Re-stripe roadway from 6 lanes to 8 lanes	---
Between Auto Center Drive and Valencia Boulevard	Widen roadway from 4 lanes to an 8 lane Major Highway	---
Between Valencia Boulevard and Railroad Avenue	Re-stripe roadway from 4 lanes to 6 lanes	---
Between Railroad Avenue and Via Princessa	Construct new 6 lane Major Highway	---
McBean Parkway		
Between San Francisquito Canyon Road and Copper Hill Drive	Construct new 2 lane Limited Secondary Highway	---
Between Avenue Scott and Creekside Road	Widen roadway from 6 lanes to an 8 lane Major Highway	Includes widening bridge over the Santa Clara River
Between Magic Mountain Parkway and Valencia	Re-stripe roadway from 6 lanes to 8 lanes	---
Newhall Ranch Road		
Between Rye Canyon Road and Avenue Tibbitts	Widen roadway from 4 lanes to an 8 lane Major Highway	---
Between Avenue Tibbitts and McBean Parkway	Widen roadway from 6 lanes to an 8 lane Major Highway	Includes widening bridge over the San Francisquito Creek
Between McBean Parkway and Bouquet Canyon Road	Re-stripe roadway from 7 lanes to 8 lanes	---
Between Bouquet Canyon Road and Santa Clarita Parkway	Re-stripe roadway from 4 lanes to 6 lanes	---
Between Santa Clarita Parkway and Golden Valley Road	Construct new 6 lane Major Highway	---
Newhall Avenue		
Between 16th Street and Railroad Avenue	Re-stripe roadway from 2 lanes to 4 lanes	Will lose the existing on-street parking due to re-striping
The Old Road		
North of Lake Hughes Road	Re-stripe roadway from 2 lanes to 4 lanes	---
Between Lake Hughes Road and Sedona Way	Widen roadway from 2 lanes to a 4 lane Secondary Highway	---
Between Hasley Canyon Road and I-5 SB Ramps at Rye Canyon Road	Widen roadway from 4 lanes to a 6 lane Major Highway	---
Between I-5 SB Ramps at Rye Canyon Road and Rye Canyon Road	Re-stripe roadway from 4 lanes to 6 lanes	---
Between Rye Canyon Road and Magic Mountain Parkway	Widen roadway from 4 lanes to a 6 lane Major Highway	Includes widening bridge over the Santa Clara River
Between McBean Parkway and Lyons Avenue	Re-stripe roadway from 4 lanes to 6 lanes	---
Between Sagecrest Circle (South) and Calgrove Boulevard	Widen roadway from 2 lanes to a 4 lane Secondary Highway	---
Between Calgrove Boulevard and Sierra Highway	Widen roadway from 4 lanes to a 6 lane Major Highway	---

Roadway / Segment	Improvement	Comments
Orchard Village Road		
Between McBean Parkway and Lyons Avenue	Widen roadway from 4 lanes to a 6 lane Major Highway	---
Parker Road		
Between The Old Road and I-5 freeway	Widen roadway from 2 lanes to a 6 lane Major Highway	---
Pico Canyon Road		
Between Valencia Boulevard and Whispering Oaks Road	Construct new 6 lane Major Highway	---
Between Whispering Oaks Road and I-5 freeway	Re-stripe roadway from 4 lanes to 6 lanes	---
Placerita Canyon Road		
Between SR-14 freeway and Sand Canyon Road	Widen roadway from 2 lanes to a 4 lane Secondary Highway	---
Plum Canyon Road		
Between Bouquet Canyon Road and Golden Valley Road	Re-stripe roadway from 4 lanes to 6 lanes	---
Potrero Canyon Road (future)		
Between SR-126 and Long Canyon Road	Construct new 4 lane Secondary Highway	Includes new bridge over the Santa Clara River
Railroad Avenue		
Between Magic Mountain Parkway and Lyons Avenue	Re-stripe roadway from 4 lanes to 6 lanes	---
Ridge Route Road		
Between I-5 freeway and Castaic Road	Widen roadway from 2 lanes to a 6 lane Major Highway	---
Sand Canyon Road		
Between Sierra Highway and Soledad Canyon Road	Widen roadway from 2 lanes to a 4 lane Secondary Highway	---
Between SR-14 freeway and Lost Canyon Road	Widen roadway from 2 lanes to a 6 lane Major Highway	Includes widening bridge over the Santa Clara River
Santa Clarita Parkway (future)		
Between Bouquet Canyon Road and Sierra Highway	Construct new 6 lane Major Highway	Includes new bridge over the Santa Clara River
Shadow Pines Blvd./Tick Canyon Rd.		
Between Grandifloras Road and Davenport Road	Construct new 2 lane Limited Secondary Highway	---
Sierra Highway		
East of Agua Dulce Canyon Road	Widen roadway from 2 lanes to a 6 lane Major Highway	---
Between Agua Dulce Canyon Road and Vasquez Canyon Road	Widen roadway from 2 lanes to a 6 lane Major Highway	---
Between Vasquez Canyon and Soledad Canyon	Widen roadway from 4 lanes to a 6 lane Major Highway	---
Between Via Princessa and Newhall Avenue	Re-stripe roadway from 4 lanes to 6 lanes	---
Between Newhall Avenue and The Old Road	Widen roadway from 4 lanes to a 6 lane Major Highway	---

Roadway / Segment	Improvement	Comments
Skyline Ranch Road (future)		
Between Whites Canyon Road and Sierra Highway	Construct new 4 lane Secondary Highway	---
Sloan Canyon Road		
Between The Old Road and Parker Road	Widen roadway from 2 lanes to a 4 lane Secondary Highway	---
Between Parker Road and Quail Valley Road	Re-stripe roadway from 2 lanes to 4 lanes	---
Between Hillcrest Parkway and Hasley Canyon Road	Construct new 2 lane Limited Secondary Highway	---
Soledad Canyon Road		
Between River Circle and SR-14 freeway	Re-stripe roadway from 4 lanes to 6 lanes	Will lose the existing Class II bike lane due to re-striping
East of SR-14 freeway	Widen roadway from 2 lanes to a 6 lane Major Highway	---
Stevenson Ranch Parkway		
Between The Old Road and Pico Canyon Road	Re-stripe roadway from 4 lanes to 6 lanes	Will lose the existing Class II bike lane due to re-striping
Valencia Boulevard		
Between Long Canyon Road and existing Valencia Boulevard terminus just west of Boulder Crest Drive	Construct new 6 lane Major Highway	---
Between I-5 freeway and McBean Parkway	Reconstruct roadway from 7 lanes to an 8 lane Major Highway	---
Via Princessa		
Between existing Via Princessa terminus just east of Claibourne Court and existing Via Princessa terminus just west of Sheldon Avenue	Construct new 6 lane Major Highway	Gap closure segment
Between Sheldon Avenue and Rainbow Glen Drive	Widen roadway from 2 lanes to a 6 lane Major Highway	---
Between Rainbow Glen Drive and Whites Canyon Road	Re-stripe roadway from 4 lanes to 6 lanes	---
Between SR-14 freeway and Lost Canyon Road	Re-stripe roadway from 4 lanes to 6 lanes	---
Between Golden Valley Road and the existing Via Princessa terminus just south of Swan Lane	Construct new 4 lane Secondary Highway	---
Whites Canyon Road		
Between Ashboro Drive and Soledad Canyon Road	Re-stripe roadway from 4 lanes to 6 lanes	---
Wiley Canyon Road		
Bridge over Railroad Avenue	Widen roadway from 4 lanes to a 6 lane Major Highway	Includes bridge widening
Between bridge over Railroad Avenue and Lyons Avenue	Re-stripe roadway from 4 lanes to 6 lanes	Will lose the existing Class II bike lane due to re-striping
Between Lyons Avenue and Wabuska Street	Widen roadway from 4 lanes to a 6 lane Major Highway	---
Between Wabuska Street and Calgrove Boulevard	Widen roadway from 2 lanes to a 6 lane Major Highway	---

Standard Cross Sections

The standard cross sections shown in Figure C-3 are adopted for both City and County areas of the Santa Clarita Valley.

Figure C-3: Standard Roadway Cross Sections

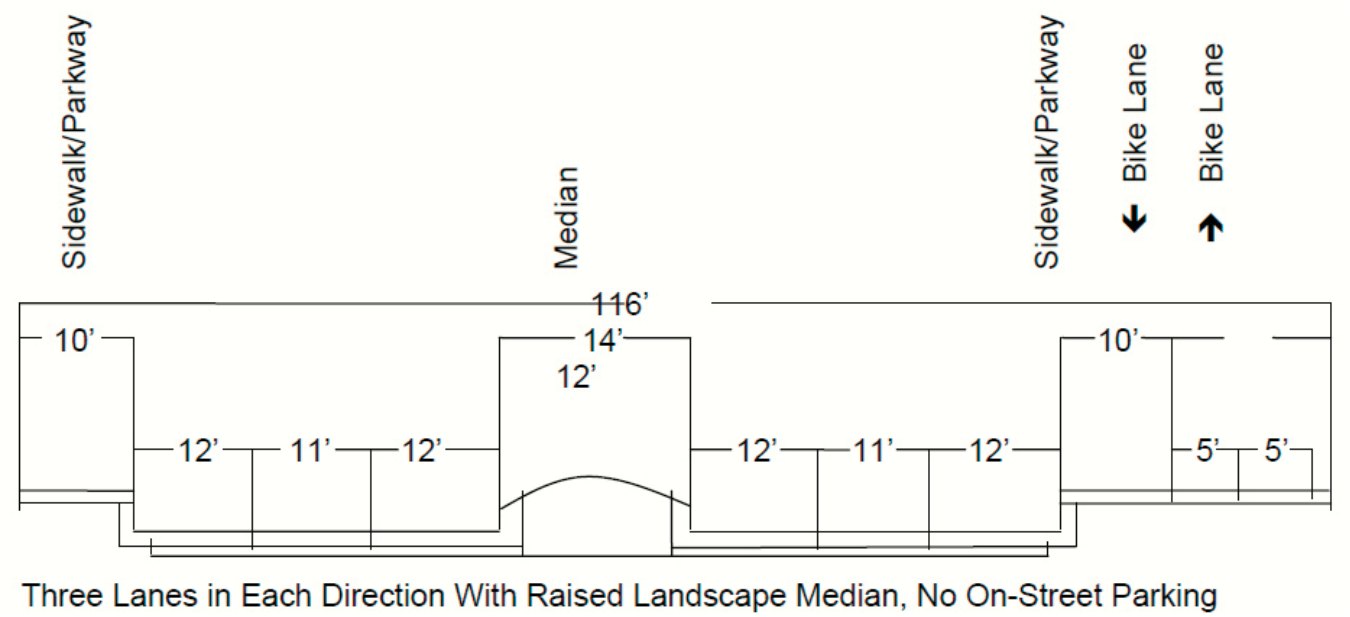

Major Highway with Bike Trail Detail

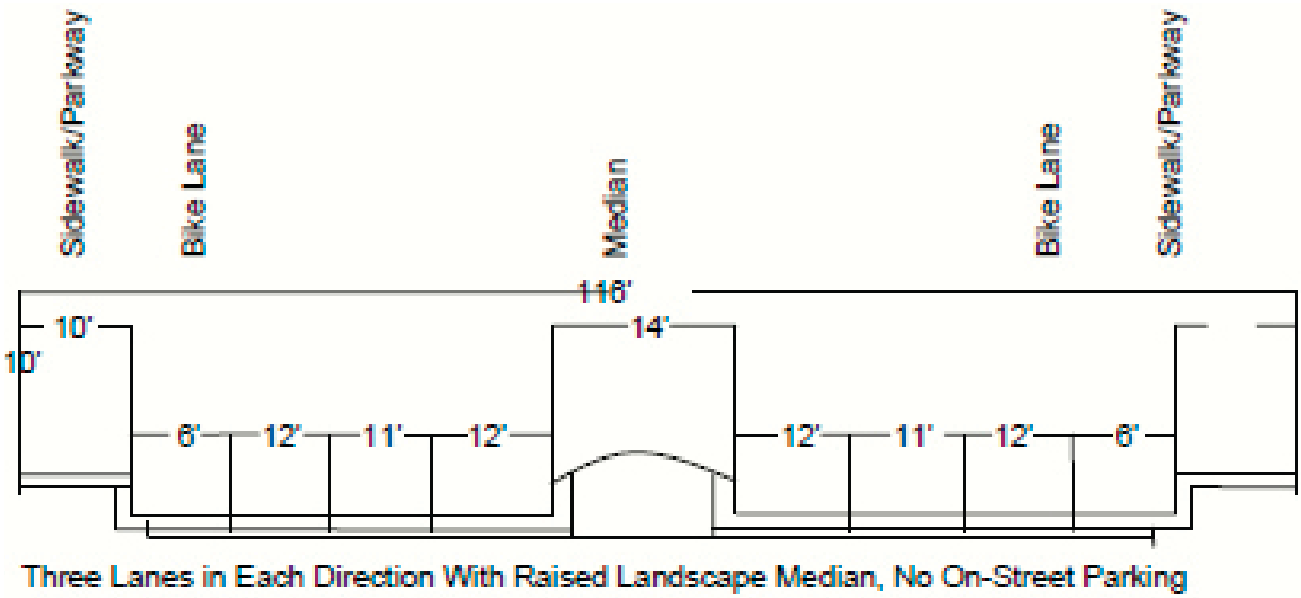

Major Highway with Bike Lane Detail

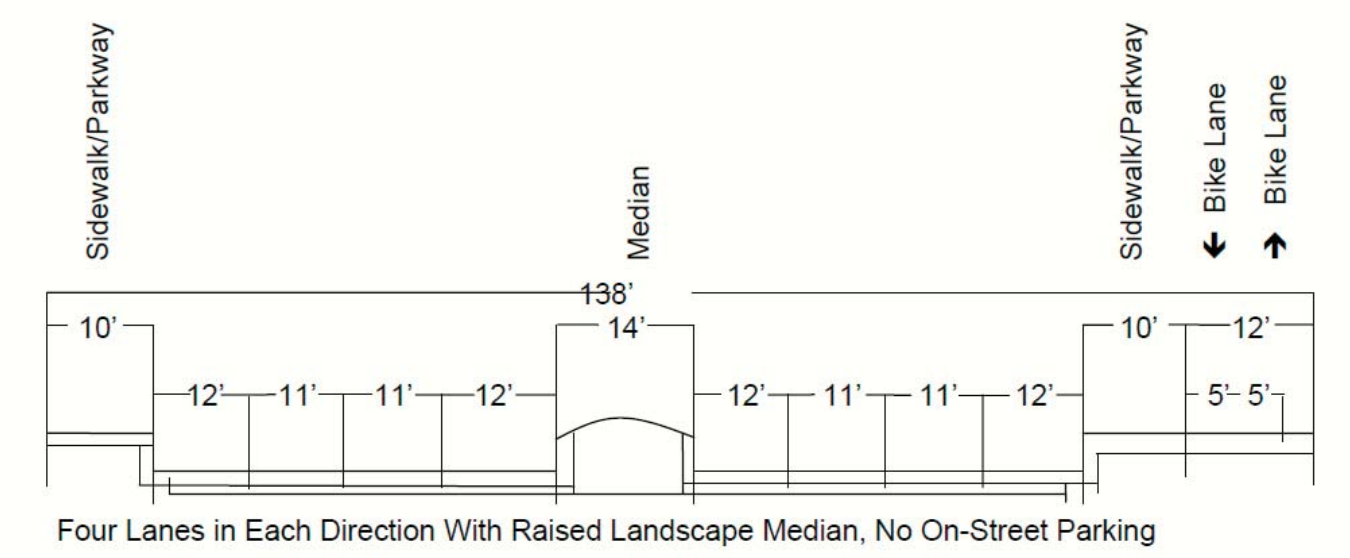

Major Highway 8-Lane Alternative with Bike Trail Detail

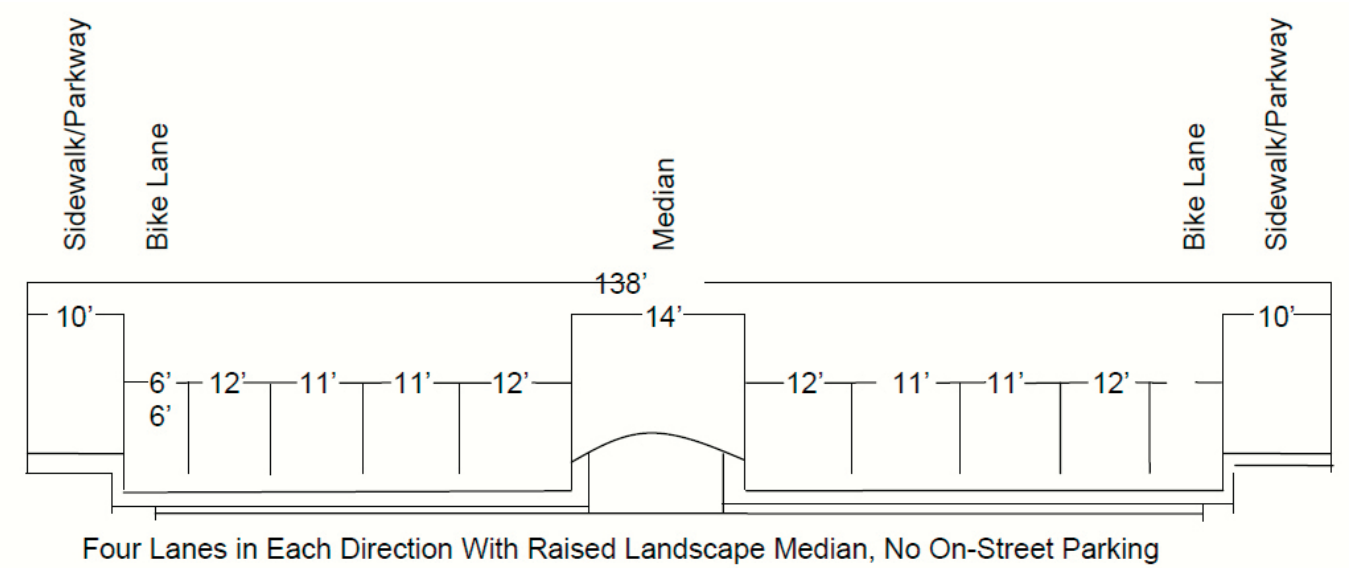

Major Highway 8-Lane Alternative with Bike Lane Detail

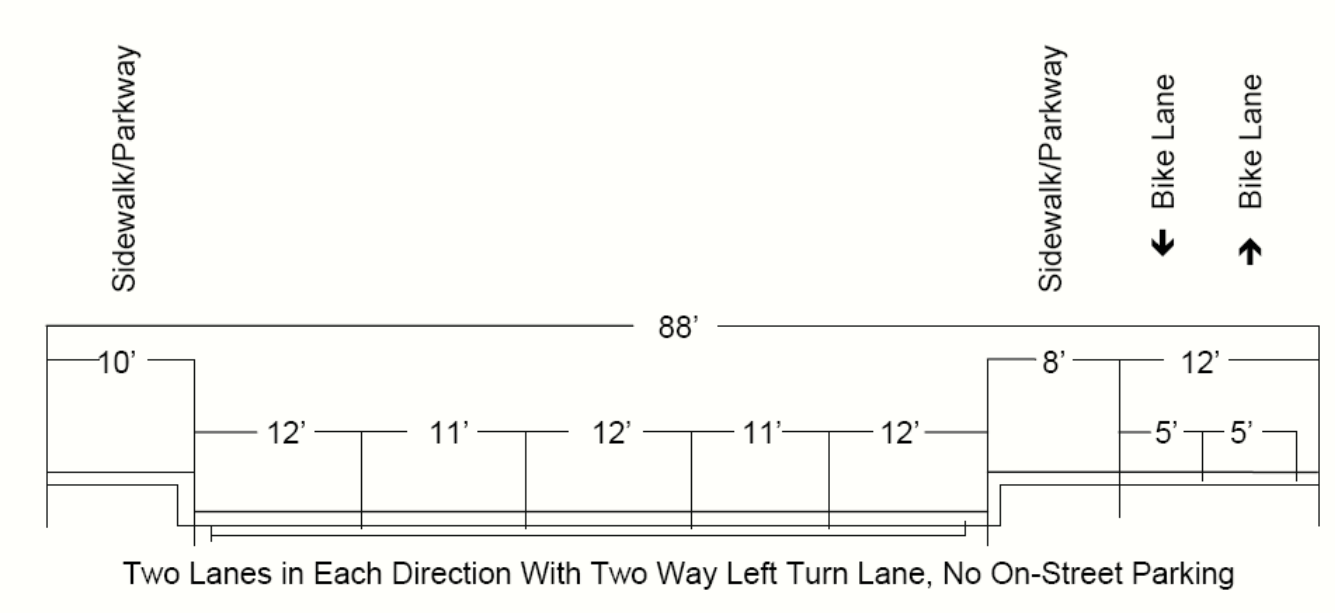

Urban Secondary Highway with Bike Trail Detail

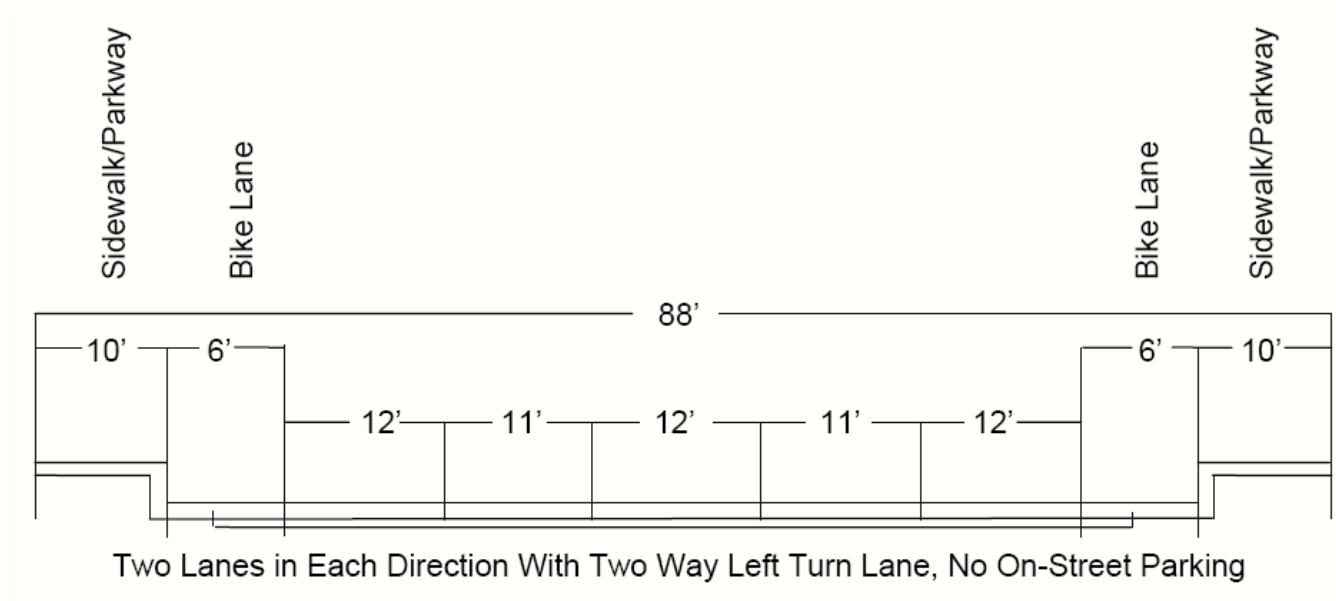

Urban Secondary Highway with Bike Lane Detail

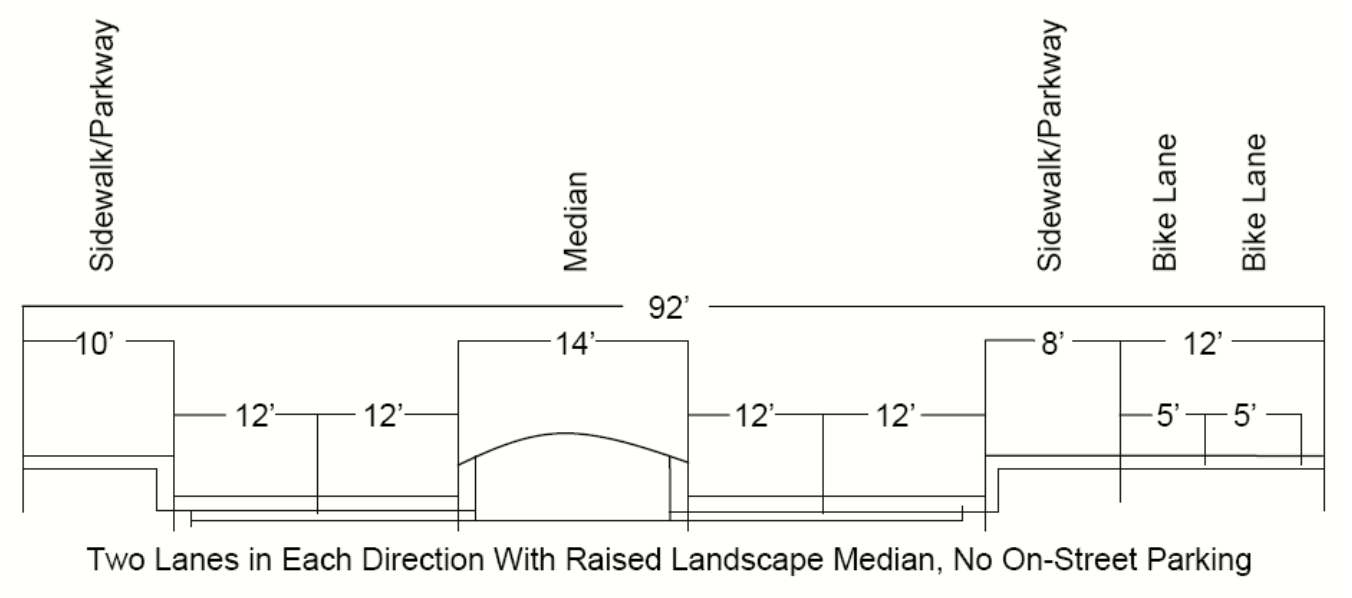

Sub-Urban Secondary Highway with Bike Trail Detail

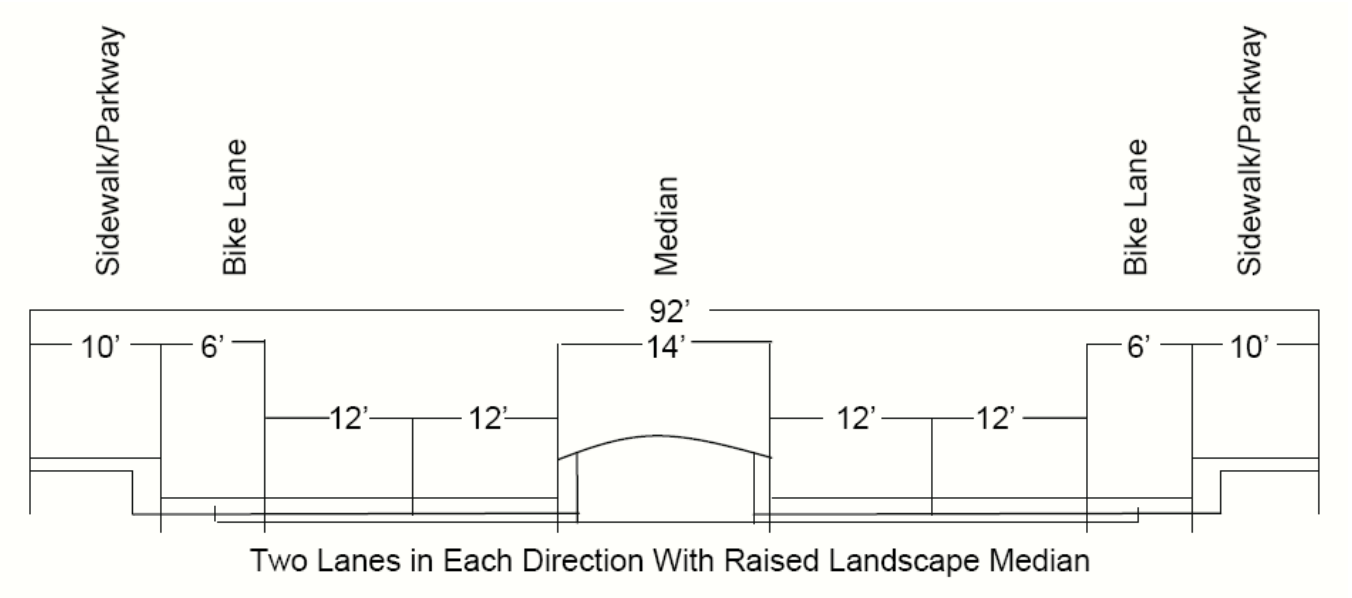

Sub-Urban Secondary Highway with Bike Lane Detail

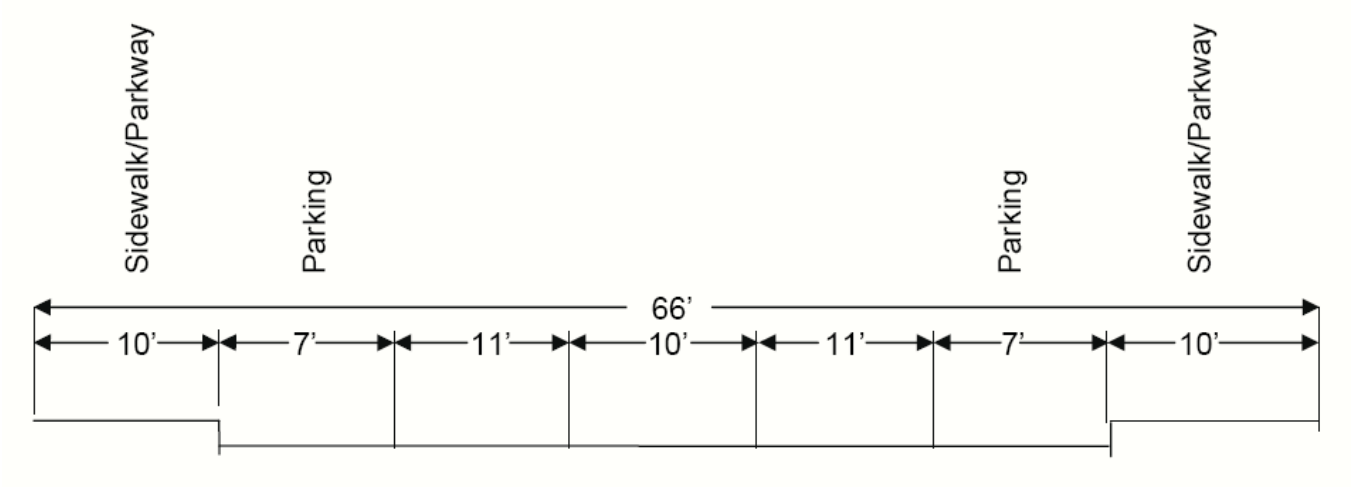

Industrial/Commercial Cul-de-sac

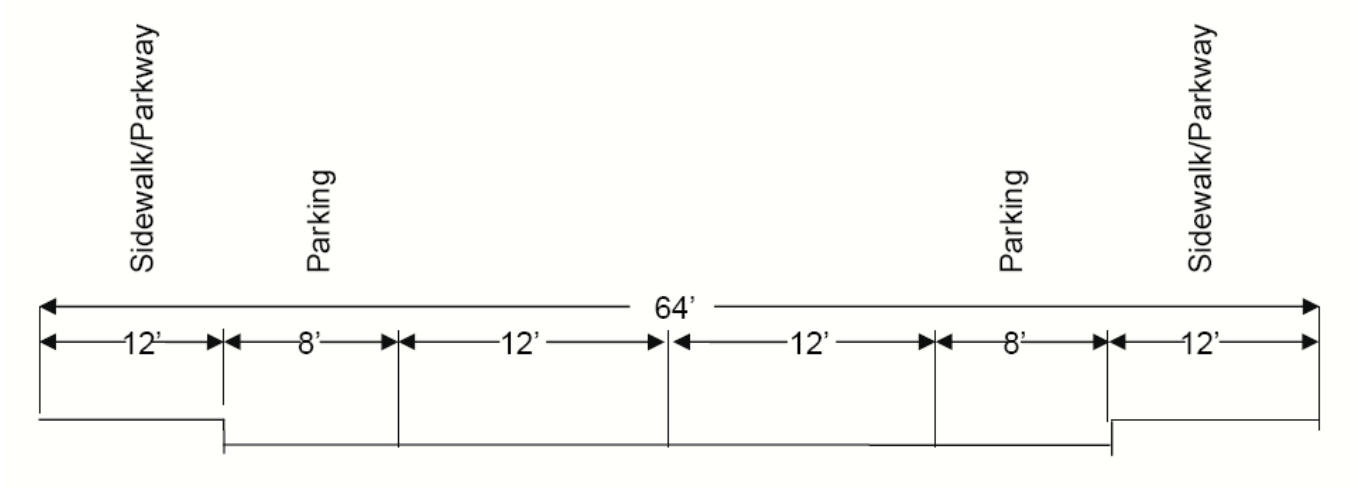

Residential Collector

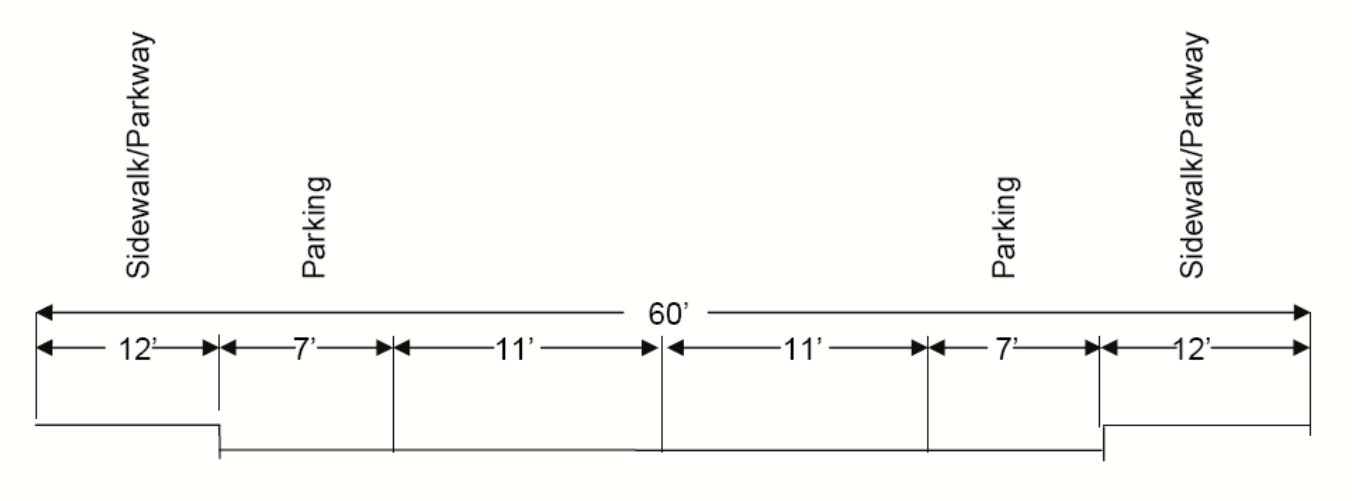

Residential Through Street

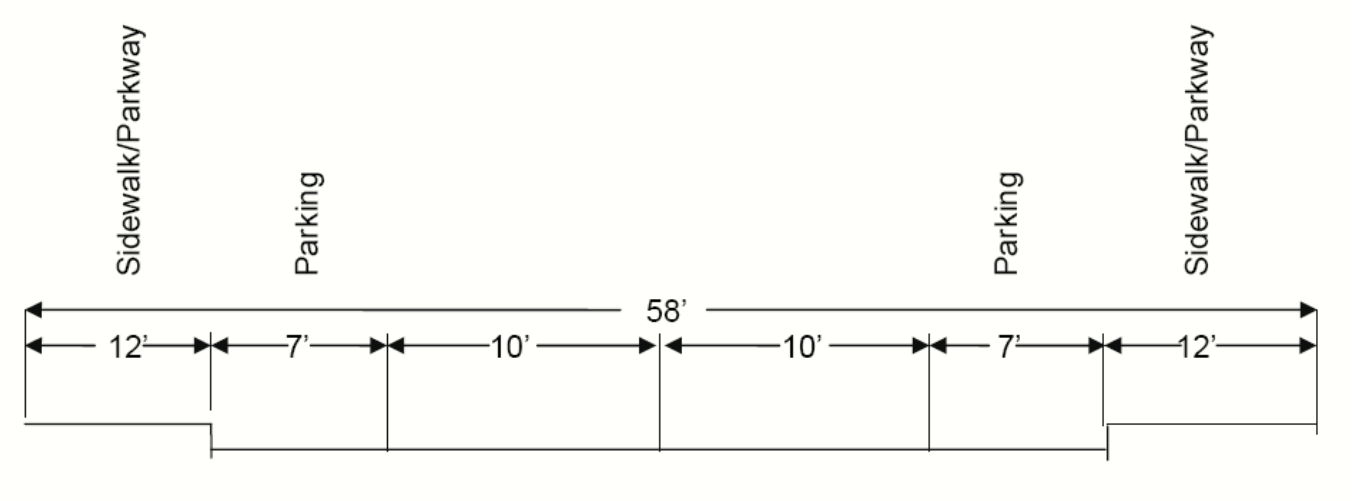

Residential Cul-de-sac

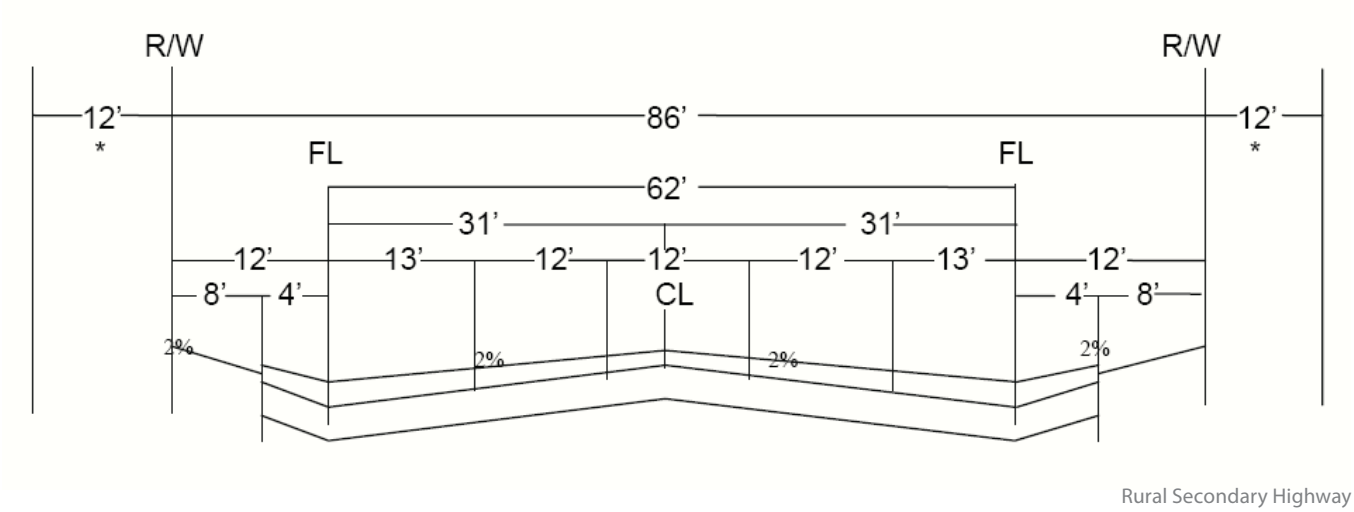

Rural Secondary Highway

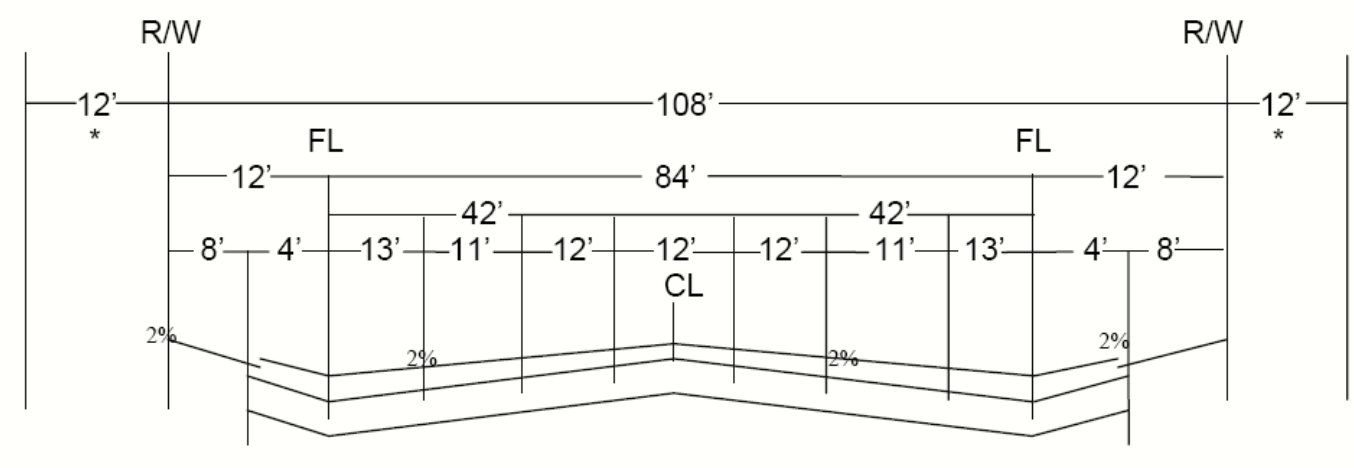

Rural Major Highway

* Master Plan Multi-Purpose Riding and Hiking Trail per Santa Clarita Area Plan.

Final design of rural highways to be approved by Los Angeles County Department of Public Works.

Truck Route Plan

One of the primary goals of the Circulation Element is to provide for the safe and efficient movement of goods throughout the planning area. Industrial uses require truck access for the delivery of raw materials or parts, the shifting of inventory, and the delivery of finished products. Commercial uses require the delivery of sales goods to market and the transferring of commercial inventories.

Designating appropriate routes for trucks within the planning area serves to minimize the effects of truck traffic on normal vehicular traffic, and to limit noise and air pollution impacts on residential neighborhoods. In addition, the weight of trucks can have deleterious effects on paving, if the roadway was not designed for truck traffic. Within the planning area, streets approved to be used for truck traffic include all streets designated as major and secondary highways. Allowing trucks to use these streets, rather than local and collector streets except for the purpose of local deliveries, will ensure that the noise and diesel exhaust generated by truck traffic will not adversely impact residential neighborhoods. In addition, by allowing trucks to use all major and secondary highways, instead of designating only certain truck routes through the planning area, truck traffic will be dispersed instead of concentrated in a few locations, thereby lessening impacts on pavement.

Truck parking has also been identified as a concern, especially in areas where residential neighborhoods are subject to noise from idling engines and refrigeration units. Truck parking will continue to be regulated in terms of location and hours, as issues arise.

Additional Access for Castaic

The Castaic community, located in the northwestern portion of the planning area, has limited access to the remainder of the Santa Clarita Valley. Access is primarily provided by the Golden State Freeway (Interstate 5), which is often subject to heavy congestion and closures resulting from snow, wildfires, and traffic accidents. The Old Road is the principal alternative to Interstate 5. However, The Old Road is often subject to the same constraints, as it parallels Interstate 5 through Castaic.

The Castaic Town Council identified Castaic's limited access as a pressing issue and requested alternatives to Interstate 5 and The Old Road. Specifically, the Town Council requested an alternative access route from Castaic to the Tesoro del Valle community. The alternative access route would generally travel southeasterly from Ridge Route Road, in the center of the Castaic community, to Tesoro del Valle Drive near its intersection with Copper Hill Drive.

The Town Council requested that this alternative access route be designated on the County's Master Plan of Highways. The County's Interdepartmental Engineering Committee (IEC) evaluated this request and determined that the route should not be designated on the Master Plan of Highways. The IEC's determination was based on two factors. First, the route would traverse steep topography and other environmental constraints, making construction of a Highway extremely difficult and expensive. Second, the route would traverse lands where minimal future development is envisioned by the Land Use Map.

Although the alternative access route is not designated on the Master Plan of Highways, it could be constructed as a collector street. As described earlier in this Element, a collector street is a roadway which has an ultimate roadway section of two lanes with limited vehicular access to the roadway from driveways and cross streets. Any future land division in this area will be required to explore the feasibility of accommodating the roadway and reserving right-of-way or constructing the roadway, where deemed appropriate.

San Francisquito Canyon Road Extension

The Circulation Element includes a proposed extension of San Francisquito Canyon Road, north of Copper Hill Drive that would connect directly to McBean Parkway. Prior to the adoption of this Area Plan, the proposed extension was designated as a Secondary Highway. As mentioned earlier in this Element, the proposed extension was recommended to be reclassified as a Limited Secondary Highway as a result of the traffic analysis conducted for this Area Plan. Accordingly, the proposed extension is now designated as a Limited Secondary Highway on the Master Plan of Highways (see Exhibit C-2 in this Area Plan).

The community expressed concerns regarding the proposed extension of San Francisquito Canyon Road. Although the community acknowledged that a Limited Secondary Highway would have fewer potential impacts on the local community than a Secondary Highway, they requested that the proposed extension be completely removed from the Master Plan of Highways. The request was evaluated and it was determined that the proposed extension should remain on the Master Plan of Highways. The determination

was based on the need for safe, effective circulation in the area, as the proposed extension is superior to the current alignment of San Francisquito Canyon Road. However, the community's concerns were acknowledged, especially as they related to equestrian users.

Prior to the construction of the proposed extension of San Francisquito Canyon Road, the County will conduct outreach to the community and will investigate any concerns that are expressed. To ensure that concerns are addressed and potential impacts are minimized, the County will also implement any required traffic mitigations. These mitigations could include an equestrian crossing above or below the roadway, provided that the crossing is technically, environmentally, and financially feasible.

VIII. CONSTRAINTS AND OPPORTUNITIES FOR IMPROVING ROADWAYS

Funding for Roadways

Metro has the authority as the Regional Transportation Planning Agency to award regional transportation funds in Los Angeles County. Metro administers two local transportation sales tax initiatives, receiving the collected funds from the State. The primary sources of Metro funds are local sales taxes (Propositions A and C) and portions of the State and federal gasoline tax. California sales tax on motor vehicle fuel provides additional revenue. Metro provides funding directly to projects through grants of local funds, or indirectly through allocated federal or State grants.

Another funding source for traffic improvements is provided by developers, who are required to provide infrastructure to support new growth as it occurs. As part of the land use entitlement and subdivision approval process, developers are required to build on-site roadway improvements and to contribute their fair share to off-site improvements. Often this fair-share contribution to off-site regional improvements is collected in the form of a traffic impact fee.

City and County have received sufficient funds over the last 10 years to make significant improvements to the street systems in the Valley. More improvements are planned, including completion of the Cross-Valley Connector, road widening, and intersection improvements. However, the availability of funding is limited and targeted to increasing capacity of the existing roadway system. Additionally, the Valley's topography, with its ridgelines, canyons, drainage courses, and utility rights-of-way, makes building many new arterial highways and freeways infeasible for environmental as well as financial reasons. As a result of these constraints, no new freeways or new arterial highways are planned as part of this Circulation Element, other than those planned for in the prior Element. Instead, the Element proposes methods and policies to make more efficient use of the existing roadway system through various types of system improvements, as described in this section.

Travel Demand Management

Travel Demand Management (TDM) refers to strategies intended to result in more efficient use of transportation resources, which may include moving people more efficiently as well as designing land uses to reduce distances between destinations. Typical TDM strategies include policies to reduce congestion through alternative work schedules, use of high-occupancy vehicle lanes, promotion of alternative travel modes, and mixed-use zoning designations. The City's Non-Motorized Transportation Plan identified the following TDM measures which could effectively reduce vehicle trips in the Santa Clarita Valley:

- Employer incentives to promote alternatives to single-occupancy vehicle work trips;
- Employer incentives to promote ridesharing;
- Promotion of alternative work schedules, including compressed work weeks, staggered shifts, and flex time;
- Guaranteed Ride Home programs for employees who use alternative travel modes to work;
- Telecommuting;
- Shuttle buses along high-use routes; and
- Increased use of non-motorized travel modes.

In addition to the City's plans for non-motorized transportation improvements, regional plans have been developed to promote alternative travel modes. The Long Range Transportation Plan for Los Angeles County, approved in April 2006 by the Metro Board, establishes goals and strategies to improve mobility, air quality, and access throughout the County. Strategies include TDM measures such as incentives by employers for alternative travel modes by employees and smart growth strategies to maximize use of public transit.

Parking Management

Parking management refers to strategies that encourage efficient use of parking spaces as a method of reducing vehicle trips. Recent studies have concluded that parking spaces are provided at a higher rate than needed to support development. In his book *The High Cost of Free Parking*, UCLA Urban Planning Professor Dr. Donald Shoup presents documentation supporting his conclusion that reforming parking policy will lead to better pedestrian environments, cleaner streets and air, safer shopping districts, and no significant inconvenience to motorists.[2] In addition, the reduction of parking requirements may free land for other more beneficial uses, and alleviate the heat-island effect of large asphalt parking lots. Based on these concepts, some cities have revised their zoning ordinances to reduce parking requirements. Possible parking management strategies for the Santa Clarita Valley include the following:

- Allowance for shared parking between uses and sites;
- Provision of public parking to serve multiple uses;
- Within transit-oriented, mixed-use areas, the separation of parking requirements from development entitlements;
- Pricing (fee parking) strategies;
- Regulation of parking to restrict duration, and designation of spaces for employees and residents; and
- Restricting vehicles within pedestrian-oriented areas.

Intersection Improvements

Traffic congestion is usually generated at intersections, due to turn movements, pedestrian crossings, signal timing and other traffic control devices. If traffic flow at intersections is maintained, then the intervening roadway segments also generally operate at acceptable levels of service. As noted above, the City has implemented programs for intersection monitoring and signal synchronization to improve capacity at intersections.

Based on the traffic model analysis undertaken for the *One Valley One Vision* planning effort, which evaluated 23 key intersections within the Santa Clarita Valley, intersection improvements are required at the following locations. These improvements may include but are not limited to additional turn lanes, installation of traffic signals, synchronization of signals, and other traffic control devices.

2 Shoup, Donald. *The High Cost of Free Parking*. Chicago: Planners Press, 2005.

City Intersections

- Bouquet Canyon Road at Newhall Ranch Road
- Bouquet Canyon Road at Soledad Canyon Road
- Sierra Highway at Soledad Canyon Road
- Sierra Highway at Newhall Avenue
- McBean Parkway at Newhall Ranch Road
- McBean Parkway at Magic Mountain Parkway
- McBean Parkway at Valencia Boulevard
- Valencia Boulevard at Magic Mountain Parkway
- Railroad Avenue at Lyons Avenue
- Whites Canyon Road at Soledad Canyon Road
- Orchard Village Road at McBean Parkway
- Orchard Village Road at Wiley Canyon Road

County Intersections

- The Old Road at Rye Canyon Road
- The Old Road at Magic Mountain Parkway
- The Old Road at McBean Parkway
- The Old Road at Pico Canyon Road

Land Use Strategies

As further explained in the Land Use Element, trip reductions can be gained by allowing mixed land uses so that residents can walk or bicycle to needed services, recreational facilities, parks, and shops. The land use plan developed for the Santa Clarita Valley includes many strategies designed to reduce vehicle trips, including designation of mixed use designations; allowance for neighborhood commercial uses within residential areas; allowance for higher residential densities in urban areas; restrictions on urban sprawl through land use designations; and promotion of transit-oriented, compact development around Metrolink stations. People are generally comfortable walking to destinations within one-quarter mile, but routinely walk one-half mile to access rail transit.[3] Surveys of bicycle commuters indicate that average bicycle commute distance can vary from approximately 4.5 miles[4], to 7.5 miles[5]. By encouraging mixed uses, the land use plan will create opportunities for non-motorized travel modes.

Congestion Relief

The strategies identified in this section, including intersection enhancements, signal synchronization, mixed land uses, transportation demand and parking demand management,

3 Scholssberg, Agrawal, Irvin, and Bekkouche, "How Far, By Which Route, and Why? A Spatial Analysis of Pedestrain Preference," Mineta Transportation Institute, 2007.
4 Forester, John, "Bicycle Transportation: A Handbook for Cycling Transportation Engineers," MIT Press, 1994.
5 Moritz, William E., "A Survey of North Amerian Bicycle Commuters," Transportation Research Record 1578, 1997.

and transportation system management, will all be used to address traffic congestion on the Valley's street and highway system. However, even with aggressive use of these programs, traffic congestion may still occur at some locations due to daily and seasonal fluctuations in traffic volumes, lack of a grid pattern of streets to provide alternate routes to motorists, and relatively high volumes of traffic concentrated along major arterial corridors. The most cost-effective way to achieve congestion relief on surface streets will be provision of alternative transportation modes that are convenient, safe, efficient, pleasant and cost-effective, as described in later sections of this Element.

IX. RAIL SERVICE

Rail Freight Service

The rail freight element of the State Rail Plan provides a detailed account of the State's rail system, including service in North Los Angeles County. Port projections in Southern California show a doubling of international container shipments by year 2020. Capacity issues are a growing concern among California's railroads and rail freight shippers. There is only one rail line extending through the Santa Clarita Valley, which is shared by both freight and passenger rail service. Only about five freight trains per day use the rail line. The primary issue for freight service on this line is competition with the service needs of passenger rail, and potential conflicts with surface street traffic at rail crossings.

Due to the rapidly increasing use of the ports at San Pedro and Long Beach, it has been proposed that the port facilities at Port Hueneme in Ventura County be expanded to handle a larger proportion of incoming freight. As part of this proposal, a freight rail line has been proposed from Port Hueneme through Santa Clarita to Victorville, which is emerging as a distribution hub. However, this concept has not won wide support in the Santa Clarita Valley, due to concerns about potential environmental impacts as well as economic feasibility. Other rail needs, such as additional grade separations and capacity expansion of the Antelope Valley Route (through double-tracking and/or passing sidings) have been identified as more necessary and feasible within the Valley.

Metrolink Service

The Southern California Regional Rail Authority (SCRRA) operates Metrolink, a five-county commuter rail network of over 400 miles. Metrolink's seven commuter rail routes all connect at Union Station near downtown Los Angeles, where connections to other trains operated by Amtrak can be made, or where riders may board buses, vans, or the Metro Red Line subway to other Los Angeles locations. Union Station also provides connections to the Metro Gold Line, a light rail transit line connecting to Pasadena and other San Gabriel Valley destinations, and to Los Angeles International Airport (LAX) via the Metro Purple, Blue and Green light rail lines or the Fly-Away Bus service. Average daily ridership on all Metrolink commuter train lines trains is over 48,000, and more than one million passengers ride Metrolink trains each month.

Metrolink began service between Santa Clarita, the San Fernando Valley, Burbank, Glendale, and Los Angeles Union Station in 1992. Metrolink now provides commuter service between Santa Clarita and downtown Los Angeles, Glendale, Burbank, San Fernando, and the Antelope Valley. The Antelope Valley line operates on the Union Pacific rail line, which is also used for freight rail service. About 24 Metrolink trains per day use the line.

When established in 1992, Metrolink commuter rail service included only one station, the Santa Clarita station in Saugus, near Soledad Canyon Road about two miles east of Valencia. This station has parking for about 500 vehicles, restroom facilities, and a passenger drop-off area. The station also serves as a major transit center for buses. A second station, Via Princessa, was opened as a temporary facility in 1994 to serve Canyon Country residents in the wake of the Northridge earthquake. This station contains 420 parking spaces. Recommendations to develop a permanent Metrolink station with transfer facilities to accommodate bus service, and increased park-and-ride spaces, were included in the City's *2006 Transportation Development Plan*. The Jan Heidt Newhall station opened in 2000 with 150 parking spaces, and was later expanded by an additional 100 spaces in 2006. A need has been identified for a future fourth station on the east side of the Valley.

As of 2008, 12 commuter trains run daily in each direction on the Antelope Valley line from Monday through Friday, with five trains departing Santa Clarita to Union Station before 8:00 a.m. Three of the twelve daily trains in each direction do not extend to the Antelope Valley, and City of Santa Clarita Transit provides connecting express buses for those trips. Commuters benefit from the line's easy access to the Metro Red Line subway and buses. Reduced Saturday

and Sunday service is also available on the Antelope Valley Line, with six trains on Saturday and three trains on Sunday running between Union Station and Lancaster.

Approximately 6,500 passengers typically ride the Antelope Valley Line on weekdays, with about 1,100 passengers from the Santa Clarita Valley. Interviews with riders indicate that gas prices, avoiding clogged freeways, environmental concerns, and time for reading while commuting are primary reasons for riding Metrolink. Recently some issues of crowding have been identified by passengers of the Antelope Valley line. In response to increased ridership, SCRRA ordered new cars which were in use on the Antelope Valley line in 2008. Passengers have also asked for additional runs during mid-day hours.

An abandoned railroad right-of-way parallels State Route 126 and Magic Mountain Parkway connecting Santa Clarita with Fillmore and Santa Paula in Ventura County. A portion of the railroad corridor has been displaced by development along Magic Mountain Parkway. If this right-of-way were re-used for transportation purposes, a new alignment would be required over much of this distance. The Newhall Land and Farming Company has indicated its intent to preserve the segment of right-of-way within its development area to allow for potential future use as a rail passenger corridor, and has indicated interest in construction of a station and park-and-ride lot. No funding has been identified for rail in this corridor; however, future rail service between the Santa Clarita Valley and Ventura County could be provided through this linkage. One proposal being studied by the Ventura County Transportation Committee calls for extending the Santa Paula Line to the terminus at the Santa Clarita Metrolink Rail Station. The Santa Clarita City Council has supported extending the Santa Paula Line into the Santa Clarita Valley for tourism and passenger service, but has not indicated support for any portion of this line to be used for freight service.

Another concern regarding commuter rail service in the Valley is the number of at-grade crossings in urbanized areas, which have the potential to result in conflicts with vehicles and pedestrians, especially during peak traffic periods. In California, grade crossings are regulated by the State Public Utilities Commission, whose policy is to increase public safety by reducing the number of at-grade crossings. Additional at-grade crossings will generally not be allowed except where the total number does not increase. Opportunities for grade separations will be considered where feasible in the future. In the North Newhall Specific Plan, where an at-grade crossing is proposed to be relocated and improved, upgrades to other crossings may also be proposed.

In cooperation with SCRRA, the City has studied a proposed realignment of the Metrolink tracks within the Whittaker-Bermite property; however, due to the cost of such realignment it was found to be infeasible. Planning studies for this area are also addressing the issue of grade separations to allow for extension of two major arterial streets (Magic Mountain Parkway and Santa Clarita Parkway).

Amtrak California

Amtrak California rail service does not operate between Bakersfield and Santa Clarita. However, Amtrak California operates an extensive network of daily express buses along I-5 that connect Southern California to and from the daily San Joaquin trains that originate at the Bakersfield Amtrak station. Of these connecting Bakersfield buses, a total of five daily northbound and six daily southbound trips stop in Santa Clarita at the Newhall Metrolink station.

High Speed Rail Development

The State of California has been studying the feasibility of a statewide intercity high speed rail network since the early 1990's. Various possible alignments have been looked at by the California High Speed Rail Authority for the 700-mile route linking the cities of Sacramento, San Francisco, Los Angeles and San Diego. The proposed rail system would use steel wheels on steel rails and be powered by electricity, with top speeds of over 200 miles per hour. One segment of the proposed route would extend from Union Station in Los Angeles to Bakersfield, through the San Fernando Valley, Santa Clarita, the Antelope Valley, and Tehachapi Pass. Under this scenario, the closest station serving Santa Clarita would likely be Sylmar. The greatest potential impacts of a high speed rail line on the Santa Clarita Valley may be from noise, aesthetics, and on biological resources along the Santa Clara River. The environmental studies for this project are underway.

In addition to the State's high speed rail project, the Orangeline Development Authority (OLDA) was formed as a joint powers authority to finance, design, construct, and operate an environmentally sensitive, high-speed transportation system. OLDA includes 14 Orange County and Los

Angeles County cities, including the City of Santa Clarita. The new transportation infrastructure is proposed as an elevated transportation system that would provide service between Irvine and Palmdale with stations located at key locations along the 108-mile route, including one in the Santa Clarita Valley adjacent to the Antelope Valley Freeway. Vehicles in the new system would travel at top speeds of 120 miles per hour. Other high-speed lines would link Los Angeles International Airport to airports in Ontario and Palmdale as well as Las Vegas. To date, the alternatives analysis, feasibility analysis, and Phase 1 Engineering have been completed. The next step is to begin work on the Environmental Impact Report. The City and County will work cooperatively with the OLDA on the alignment for the new system through the planning area to identify the most suitable station site in the Santa Clarita Valley. While the station is envisioned generally in the vicinity of the Antelope Valley Freeway, more information is needed before a specific site can be identified. The station would serve as a regional hub within the Santa Clarita Valley but would also act as a gateway between the Valley and the rest of California. The station area would likely contain hotels, parking structures, office buildings, retail space, residential units and even recreational or cultural amenities. The station would require significant investment in new infrastructure and would require a large amount of land. Several possible locations exist, including an area known as the Vulcan properties, located in the eastern portion of the planning area east of the current City limits. Planning for the new transportation system remains preliminary and it is too early in the process to know which potential station site would best serve the Valley's high-speed transportation needs with the least impact on existing development.

X. AIR SERVICE

Aviation facilities are an integral component of the regional transportation system. The Los Angeles World Airports (LAWA) provides commercial air travel to the planning area through its main facilities in Los Angeles (LAX); the Van Nuys Regional Airport; and Palmdale Regional Airport. In addition, the Burbank/Glendale/Pasadena Regional Airport (also called the Bob Hope Airport) serves residents of the planning area.

Santa Clarita Valley residents primarily use the Bob Hope Airport in Burbank for shorter distance flights and LAX for international flights, or for destinations not served by Burbank. In addition to taxi service, there are shuttle services providing trips to local airports, including the Van Nuys Fly-Away Shuttle. Fly-Away service to LAX is also available from Union Station in Los Angeles, which connects with Metrolink service to the Santa Clarita Valley.

Planned expansion of passenger air service at the Palmdale Regional Airport is being studied as an alternative to continued expansion of service at LAX. Officials representing the Santa Clarita Valley have indicated support for this plan, which would make air service more accessible to Valley residents. Due to congestion on Interstate Routes 5 and 405, expanded airport operations in Palmdale would provide a shorter and less congested alternative for air passengers from the Santa Clarita Valley.

The Agua Dulce Airpark is a privately owned airport serving general aviation needs with one runway, aircraft parking, fuel, and basic passenger services. The Airpark averages about 28 operations per week and stores about 35 aircraft. Most of the Airpark's activity involves local operations. The Airpark is located in an unincorporated area of Los Angeles County, and the County has adopted an Airport Land Use Plan to protect the clear zones and ensure land use compatibility with airport operations. In 2006, the County approved continued operation and expansion of Airpark services, including allowing up to 300 airplanes and adding helicopter operations.

There are also several helipads in the planning area, used for medical transport, law enforcement, fire department activities, and other special transport needs. The locations of these helipads are shown on Figure C-4.

XI. PUBLIC TRANSIT AND OTHER TRANSPORTATION SERVICES

City of Santa Clarita Transit

Local and regional bus service is provided by City of Santa Clarita Transit, which operates local routes within the planning area and commuter service into and out of Downtown Los Angeles, Century City, the Antelope Valley, and Warner Center. The City of Santa Clarita assumed responsibility for local transit in 1991 from Los Angeles County, which operated a small transit system. Under City management, express services to the San Fernando Valley, West Los Angeles, and downtown Los Angeles were expanded. The

City completed a Transit Development Plan (TDP) in 1997 which made several recommendations for improvements and modifications. Since 1997 and based on the TDP, total transit system ridership has more than doubled. The City updated the TDP in 2006.

With ridership of 3.7 million passengers in 2006, City of Santa Clarita Transit provides connections with services by Metrolink, Antelope Valley Transit Authority, Metro, and other regional transit providers. City of Santa Clarita Transit provides service on nine local fixed routes, nine commuter express routes, four station link routes, and supplemental school day service. Local routes provide service seven days a week while the remaining services operate on weekdays only. Express buses operate to and from the Antelope Valley, downtown Los Angeles, Westwood/Century City, and Woodland Hills. City of Santa Clarita Transit's regional routes serve several park-and-ride lots located throughout the Valley, as well as the Santa Clarita and Newhall Metrolink stations.

The City has adopted a program to subsidize fares for senior citizens, and all buses are wheelchair accessible. City of Santa Clarita Transit also provides daily Dial-a-Ride (DAR) service within the Valley to provide service to senior citizens and disabled residents. Much of the DAR services are to the Adult Day Care Center and the Senior Center in Newhall. DAR passengers represent only two percent of daily patronage, but almost 20 percent of the transit budget. The updated TDP proposes several operational improvements to improve efficiency of this program.

A new state-of-the-art transit maintenance facility opened in the Rye Canyon Business Park in April 2006, replacing scattered facilities rented from the private sector. The building was constructed using environmentally-sensitive design features and materials, including hay-bale walls and drought-resistant landscaping, and has received a Gold rating from the U. S. Green Building Council under the Leadership in Environmental Energy and Design (LEED) rating system. In 2002, the McBean Regional Transfer Center was opened adjacent to the Valencia Town Center; this facility provides a central transfer focal point to serve the community and has improved overall efficiency.

The City of Santa Clarita Transit's 2006 TDP calls for a 58 percent expansion of services over the next several years. In the future, the major capital facility needs for transit will be additional buses and vehicles. Planned improvements include automated vehicle location equipment, passenger information systems, and automated ridership count equipment. Signage will be posted throughout the community to highlight when buses will arrive; this information will also be accessible through personal computers and hand held computer devices.

The areas generating the highest transit ridership are Newhall and Canyon Country in the vicinity of the intersection of Soledad Canyon Road and Sierra Highway. The City and County have opportunities to promote denser, transit-oriented development in areas where transit use is already high. Low-density residential development along the outskirts of the urban area provides the least opportunity to make effective use of transit.

The 2006 TDP identified major employers and other activity centers which are served by transit, including Six Flags Magic Mountain, Henry Mayo Newhall Memorial Hospital, the Valencia Industrial Center, the Valencia Commerce Center, and the Valencia Town Center. The Plan also identified employers and destinations that are not yet served. According to the Plan, "transit service is desirable at locations where very large employers or clusters of employment are found. Locations that attract large numbers of visitors, students, children, the elderly or disabled should also have transit service available."

City of Santa Clarita Transit provides good coverage and generates high ridership throughout the Valley. However, about 40 percent of the Valley's residents live outside a ¼-mile walking distance from a bus route, generally accepted as the distance most people are readily willing to walk to bus service. Lack of adequate access to transit stops causes service deficiencies in Sand Canyon, Castaic, Val Verde, Placerita Canyon, and other areas along the rural fringe. In some areas, such as Placerita Canyon and Calgrove Boulevard, gates have been installed across collector streets, precluding transit service in adjacent neighborhoods. Even in more urbanized areas, barriers that separate residents from transit stops include steep terrain, aqueducts, flood control channels, power line corridors, walled neighborhoods, lack of street connectivity, and grade separations. Many of the internal paseo systems do not connect to transit stops. There is a need for better pedestrian links to transit stops throughout the Valley in order to increase ridership.

In recent years, increased ridership and traffic congestion have affected service reliability by delaying buses. The intersection of Soledad Canyon Road and Bouquet Canyon Road has been particularly problematic in causing bus delay; however, completion of the Cross Valley Connector is expected to alleviate some of this delay. In addition, it is recommended that traffic signals be programmed to give priority to buses at major intersections. Congestion is also caused by lack of adequate bus turnouts on heavily traveled arterial streets; these should be designed with sufficient length to allow the bus to re-enter the travel lane.

The City has implemented a transit impact fee to recover capital costs from new development to mitigate impacts of that development on the transit system. This fee is currently under review with respect to anticipated system needs. In the future, the County will also evaluate the feasibility of adopting a similar fee to fund the capital costs of expanding the public transit system to serve new development in unincorporated areas of the Valley.

Commuter Transit Service

City of Santa Clarita Transit operates local commuter service into and out of downtown Los Angeles, Century City, the Antelope Valley, and Warner Center. Most of these routes are well used; use is monitored and adjustments are made to times if necessary to accommodate demand. The busiest commuter transit stops serve the Metrolink stations and park-and-ride lots. Commuters have identified the need to increase service to downtown Los Angeles during mid-day hours, and to provide service to North Hollywood, which is served by the Metro Orange and Red Lines. City of Santa Clarita Transit will continue to expand service to meet customer needs as funding allows.

Special Transit Services

City of Santa Clarita Transit provides special bus routes to major destination points throughout the Los Angeles area and to special events. Other special transit services include provision of transit to the Getty Center, Hollywood Bowl, beaches, and various festivals with destinations and routes determined on an as-needed basis.

In order to facilitate multi-modal transportation, City of Santa Clarita Transit installed bicycle racks on all buses in July, 2006. These racks can accommodate two to three bicycles per bus. Approximately 100 riders per month use the bicycle racks.

Bus Stop Improvement Program

The Bus Stop Improvement Program identified opportunities to create uniform and aesthetically pleasing bus stop improvements throughout City and County portions of the Santa Clarita Valley. As highly visible features within the streetscape right-of-way, bus shelters and benches provide an opportunity to assist in creating a distinctive identity for the Valley, as well as promoting a positive environment for transit riders. A goal of the program is to remove shelters that provide advertising and replace them with an architecturally enhanced bus shelter design that meets federal regulations and enhances the Valley's image.

A significant need identified in the 2006 TDP was improving accessibility, convenience and safety for bus stops. Some stops have no paved waiting areas for transit riders to stand while waiting for the bus, causing them to stand on unpaved shoulders of busy streets, or in landscaped areas where sprinklers spray intermittently. The Plan recommended retrofitting bus waiting areas to provide pavement and connections to walkways, and ensuring that new development provides or contributes to adequate transit stop facilities as a condition of approval, where appropriate.

Park-and-ride Lots

Six park-and-ride lots are located in and near the planning area to encourage the use of public transit for a portion of commuter travel. All park-and-ride lots within the City have transit service except for the lot at Golden Valley Road at SR-14. Several of the park-and-ride lots, including those at the Newhall and Santa Clarita Metrolink stations, are at or exceeding capacity. Additional commuter parking is provided in scattered locations within businesses adjacent to transit routes.

The 2006 TDP identified a need for development of a major (500+ spaces) park-and-ride lot at the intersection of Newhall Avenue and Sierra Highway. In addition to improving service at that location, a larger lot would increase parking capacity at the Newhall and Santa Clarita Metrolink Stations by diverting some bus riders from parking at the Metrolink stations. A second park-and-ride lot is also needed near the McBean Transfer Station, according to the plan. Funding sources for these improvements are being evaluated.

School Bus Transportation

Each of the elementary school districts provides limited yellow bus transportation to students. Over the last decade the William S. Hart School District has gradually eliminated school buses to junior high and high schools. City of Santa Clarita Transit provides transit services near the schools, providing an alternative means of transportation for students although not designated as the official school transport provider.

Taxi Service

Taxi service is provided in the Santa Clarita Valley by Yellow Cab and Eagle Cab Companies, which have comparable rates. There are no subsidies provided for taxi service.

XII. NON-MOTORIZED TRAVEL MODES

According to the regional planning agency, Southern California Association of Governments (SCAG), average travel time on southern California roadways is higher than both the state and national averages. The resulting congestion contributes to poor air quality, opportunity costs of delay, high energy costs, and greenhouse gas emissions contributing to global climate change, and decreased quality of life for residents. The Congestion Management Program for Los Angeles County predicts that the largest increase in daily trips is expected to occur in North Los Angeles County, including the Santa Clarita and Antelope Valleys. Because of the expected growth within the Santa Clarita Valley, and the growing concern about traffic congestion, a major component of the Circulation Element is promotion of non-motorized travel modes, including bikeways and walkways.

Planning for Bikeways

A vital component of the Valley's circulation system is an integrated system of bikeways, both on-street and off-street. An interconnected network of safe and convenient bikeways provides residents with both recreational benefits and options for reducing vehicle trips for short trips. In addition, providing attractive bikeways can provide public health benefits by encouraging exercise.

For planning purposes, bikeways are classified as to their location and type into three categories. A Class I bikeway is an exclusive, two-way path for bicycles that is completely separated from a street or highway. Class II bike lanes are signed and striped one-way lanes on streets or highways, typically at the edge of the pavement. Bike lanes provide a demarcated space for bicyclists within the roadway

Table C-4: Gaps in the Inter-Jurisdictional Bikeway Network - Santa Clarita Valley

MTA #	Corridor	Jurisdiction	Description	Constraints
30	Old Road	LA County	Located along Old Road adjacent to Golden State Freeway. Connection between Valencia, Santa Clarita and San Fernando Road Metrolink right-of-way bike path in the San Fernando Valley	May require shoulder improvements and road widening in some places to create Class II or III bikeway May require shoulder improvements and road widening in some places to create Class II or III bikeway.
31	Route 126	LA County	Connection between Santa Clarita and the Ventura County Line.	May require shoulder improvements and road widening in some places to create Class II or III bikeway.
49	Castaic/ San Francisquito Creek	Santa Clarita/LA County	Connection between Santa Clarita and Castaic Lake along Castaic Creek, San Francisquito Creek, and the Golden State Freeway	May require shoulder improvements and road widening in some places to create Class II or III bikeway.
50	Sierra Highway	Santa Clarita/LA County	Connection between the Old Road and Soledad Canyon Bike Path	May require shoulder improvements and road widening in some places to create Class II or III bikeway.

Source: Los Angeles Metropolitan Transportation Authority: 2006 Metro Bicycle Transportation Strategic Plan, p. 103-104.

right-of-way, which is especially important on streets with moderate or higher volumes and speeds. Class III bike routes share the right-of-way with vehicles; they may be signed, but are not exclusively striped for use by cyclists. Although bike routes offer little benefit to cyclists on busy roadways, they can be used to guide cyclists through the street network. On any street carrying over 10,000 vehicles per day at speeds of 30 mph or higher, striped bike lanes are recommended over bike routes. In selecting routes for bikeways that share the right-of-way with vehicles, design criteria include connectivity, traffic volumes, speeds, curb width, intersection protection, and the number of commercial driveways.

In planning for bikeways, consideration should also be given to the differing needs of experienced cyclists versus casual riders, and to utilitarian cyclists versus recreational riders. In general, cyclists who are less experienced or who are riding for enjoyment prefer using Class I, off-street bike paths that are landscaped, shaded, and may meander through neighborhoods or open areas. Cyclists who are experienced racers, long-distance riders, or who regularly ride as a way of commuting to work or services, generally prefer to ride within the travel lanes of the right-of-way because the directness of the route is more important than visual interest, and they can avoid conflicts with recreational trail users and pedestrians.

Regional Bikeway Planning

The MTA Board adopted the *Metro Bicycle Transportation Strategic Plan* in 2006 to promote bicycle use throughout the County. The Plan's vision is to make cycling a viable travel choice by promoting links between bicycle facilities and the transit network. The Plan identifies four "bike-transit" hubs within the Santa Clarita Valley: the Valley's three Metrolink commuter rail stations, and the McBean Transfer Station.

Another goal of the *Metro Bicycle Transportation Strategic Plan* was to evaluate gaps in the inter-jurisdictional bikeway network connecting cities and unincorporated areas to destinations and transit stops, and provide strategies for connecting bikeway links. Where gaps in the system were identified, city and county planners are encouraged to consider projects to complete the bikeway network.

Within the Santa Clarita Valley, four gaps in the inter-jurisdictional bikeway network were identified by the Metro plan. These are summarized in Table C-4. Funds are available from the Bicycle Transportation Account program to help improve bicycle facilities, provided local agencies have adopted Bicycle Transportation Plans. The City of Santa Clarita's Non-Motorized Transportation Plan will fulfill this funding requirement.

It should be noted that a portion of Bikeway Link No. 31 in Table C-4 extends through the Newhall Ranch Specific Plan area, adopted by Los Angeles County in 2003. The Master Plan for Trails within the Specific Plan shows a regional trail planned adjacent to the Santa Clara River from the eastern edge of the project to the Ventura County Line. When completed, this trail will fulfill the need for a bikeway connection between the Santa Clarita Valley and Ventura County.

Both the City and the County have actively planned for and promoted development of trails and bikeways. Los Angeles County has adopted and is currently updating the *County Plan of Bikeways*, which divides the County into six subareas, of which the North County area is one. When the update is complete, the County's bikeway plan will be incorporated into the comprehensive Valley-wide bikeway plan in this Element (Figure C-5).

City of Santa Clarita Bikeway Planning

The City of Santa Clarita first adopted the Multi-Use Corridor System plan as part of its Circulation Element update in 1997. The Multi-Use Corridor System is a trail system that serves a combination of users, including pedestrians, bicyclists, and equestrians; an example of this type of facility is the South Fork Trail. Multi-Use Corridors are encouraged within and adjacent to local river and flood plain facilities, and typically include a right-of-way of 17 feet in order to provide separation between cyclists and pedestrians. Where equestrian use is allowed, a minimum of 30 feet is desirable.

The first bike paths built in the City generally followed the Santa Clara River and its tributaries. Newer paths have been developed which connect residential neighborhoods to the river paths. Bike paths exist in most neighborhoods, providing connections to the Santa Clarita Metrolink Station, several schools, businesses along Soledad Canyon Road and McBean Parkway, and to recreational opportunities along the rivers. Grade-separated undercrossings are generally provided where Class I bike paths cross major highways.

The City of Santa Clarita initiated preparation of a Non-Motorized Transportation Plan in 2006, with the general goal of reducing the number and length of vehicle trips through promotion of walking and biking as alternate modes of transportation. In undertaking a plan to increase non-motorized transportation, the City identified quality of life benefits such as reduced noise from traffic, better air quality, reduced fuel costs, and less time spent in traffic congestion. The resulting plan, entitled *City of Santa Clarita Non-Motorized Transportation Plan*, found that generally people tend to walk to destinations within ¼-mile, and bike to destinations within ½-mile. Other studies have found that people routinely walk one-half mile to access rail transit [6]and surveys of bicycle commuters indicate that average bicycle commute distance can vary from approximately 4.5 miles[7], to 7.5 miles[8]. Initial surveys of residents and cyclists indicated that some of the reasons cited for not walking or cycling to destinations included the following:

- Too many cars that drive too fast;
- Difficult to cross streets;
- No bike lanes or walking paths;
- Paths in poor conditions;
- Destinations are too far away;
- Inadequate lighting; and
- Lack of time.

The City's Non-Motorized Transportation Plan, adopted in June 2008, addressed these issues through development of connected, safe, and convenient routes for cyclists and pedestrians. The plan also included a Safe Routes to Schools Program for three elementary schools. Policies and programs in the plan were designed to identify and prioritize bikeway needs; provide a plan for needed facilities and services; contribute to the quality of life through trail development; improve safety for cyclists and pedestrians; identify land use patterns that promote walking and cycling; improve access to transit; maximize funding opportunities for trails; and provide educational and incentive programs. According to City staff, "primary goals of the plan are to alleviate the current traffic congestion in the City and to encourage future decreases in motor vehicle use by making it easier, safer and more enjoyable to bicycle and walk as a general means of transportation. The plan will also encourage transit use and address equestrian needs."

6 Scholssberg, Agrawal, Irvin, and bekkouche, "How Far, By Which Route, and Why? A Spatial Analysis of Pedestrain Preference," Mineta Transportation Institute, 2007.
7 Forester, John, "Bicycle Transportation: A Handbook for Cycling Transportation Engineers," MIT Press, 1994.
8 Moritz, William E., "A Survey of North American Bicycle Commuters," Transportation Research Record 1578, 1997.

The coordinated master plan for bikeways in the Santa Clarita Valley is shown on Figure C-5.

The City has already taken several steps to encourage walking and biking, including providing bicycle racks on City buses; promoting transit-oriented development in Downtown Newhall; constructing over 30 miles of off-street bicycle trails and over 14 miles of bicycle lanes; providing bicycle lockers at Metrolink stations, the McBean transfer station and City Hall; modifying traffic signal detection for bicycles; promoting Bike-To-Work days; and hosting the Amgen Tour Bicycle Race in 2007.

Within the City of Santa Clarita, many opportunities are available for recreational riders on Class I trails, and more such trails are planned. The Non-Motorized Transportation Plan also identified a need to accommodate on-street riders through designation of bike lanes on arterials, wide curb lanes, loop detectors at signals, direct commuter routes, and protected intersection crossing locations. In addition, connections between residential areas and bikeways are needed to facilitate increased bicycle use for both recreational and commuting purposes.

Bicycle Parking and Support Facilities

Adequate bicycle parking to serve transit facilities and commercial areas has also been identified as a goal by both the City and the County. Bicycle lockers are provided at all three Metrolink stations and at City Hall. Several major employers, such as Six Flags Magic Mountain and The Master's College, provide bicycle parking and changing facilities to promote bicycle support for employees. In order to encourage bicycle use at major employment and commercial centers, it is necessary that bicycle parking facilities be secure. Policies have been added to the Circulation and Land Use Elements to require adequate bicycle parking and support facilities where appropriate.

Pedestrian Circulation System

A fundamental goal of this Area Plan is to create walkable communities and neighborhoods within the Santa Clarita Valley. In order to achieve this objective, pedestrian access must be considered in all phases of development planning, including site design, subdivision design, and public improvement projects. The basic needs for pedestrian travel are safety, connectivity, and accessibility for all, including the disabled.

The Valley's existing pedestrian network is comprised of sidewalks, paseos, and multi-use trails. Sidewalks are defined as pathways running alongside a parallel roadway. Paseos are paved walking paths that provide pedestrian links outside of the street network. Multi-use trails are unpaved trails that are suitable for walkers, hikers, equestrians and mountain bikers.

Most of the major roadways in the Valley have sidewalks along portions of their length. Along many arterials, such as Soledad Canyon Road, sidewalks are located adjacent to the curb and are not buffered from vehicle traffic by landscaped parkways, causing an unpleasant walking environment due to traffic noise and fumes. In other areas, such as portions of McBean Parkway and Newhall Ranch Road, sidewalks are separated from vehicle lanes by landscaped parkways, resulting in a more user-friendly pedestrian experience. The network of sidewalks is discontinuous in many areas; sidewalks are not provided on some residential streets, in some industrial areas, or on designated rural roads. Not all bus stops are served by sidewalks, and in some areas sidewalks are not provided on both sides of a street. Some rural communities in the Valley, such as Agua Dulce and those with special standards districts such as Placerita Canyon and Sand Canyon, have opted not to have concrete sidewalks and prefer streetscape designs more in keeping with the rural and equestrian character of these neighborhoods; however, even in these areas, walking trails of some type are desirable for pedestrians in certain locations.

Major intersections are striped with pedestrian crosswalks, and signalized intersections have pedestrian push buttons to activate walk signals. Pedestrian countdown signals are planned for approximately 200 intersections in the City; about 80 signals have been installed as of 2008, and the work was completed in 2009. However, crossing eight to 10 lanes of traffic on streets where speeds average 45 to 55 miles per hour can be daunting for pedestrians. Intersections can be made more pedestrian-friendly by installing traffic calming features such as striping, landscaping, and pedestrian islands. Pedestrian bridges have been provided for crossing of arterial streets in several areas throughout the community; these improvements will continue to be required to enhance pedestrian safety and connectivity, where feasible and practical. The City is also exploring the feasibility of using round-abouts at certain intersections, which are designed to slow traffic and allow merging and turn movements without causing long periods of idling for vehicles, while allowing pedestrians to walk safely around the intersection.

Portions of the planning area, such as Valencia and Saugus, were planned with paseos that provide attractive, landscaped pedestrian pathways connecting residential neighborhoods, commercial and public uses. The Valencia paseo system also provides pedestrian overpasses of arterial streets to increase public safety and preserve mobility on the arterials. Paseos were designed to provide connections between cul-de-sacs, to schools, neighborhood parks, and activity areas. They are landscaped, paved, and illuminated. In some areas paseos take the place of sidewalks.

In other portions of the planning area, topography and subdivision design have discouraged the use of walkways and, consequently, the use of public transit. Walled communities and steep hills make it difficult for many residents to conveniently access buses operating on arterials. In addition, the Non-Motorized Transportation Plan identified the following needs for pedestrians:

- Sufficient crossing time at signalized intersections;
- Visibility at crossings;
- Continuity of walkways;
- Adequate walkway width, removing obstructions in the walkway, and providing buffer or separation from travel lanes;
- Traffic calming to slow speeds in pedestrian areas;
- Mixed land uses decreasing distance between destinations; and
- Providing connectivity through cul-de-sacs and non-grid street patterns.

The City's Unified Development Code also contains requirements for incorporating non-motorized transportation amenities into new development. These include requiring pedestrian access ways through blocks of over 700 feet in length; requiring amenities for transit users, cyclists and pedestrians; requiring installation of pedestrian crossing treatments near schools, parks, senior facilities, and other destinations for special needs groups; requirements for sidewalks in most new development; and requirements for bicycle parking.

Recommendations for new development by the Non-Motorized Transportation Plan include increasing connectivity to encourage walking and bicycling. Subdivision patterns

that create numerous cul-de-sacs, developments surrounded by block walls, and shopping centers with no pedestrian connections to adjacent neighborhoods are discouraged. Where cul-de-sacs are used, pedestrian connections to adjacent streets should be provided, and walkways should be provided connecting neighborhoods to services and facilities. Policies have been included in the Element to emphasize these objectives.

In addition to the policies in the Circulation Element designed to promote walkable communities, the Land Use Element has been developed to promote non-motorized transportation by concentrating shops, restaurants, and other destinations in proximity to residences so that people can walk to these services.

Hiking Trails

The City has developed several hiking trails, some shared by equestrian users, which are used primarily for recreational purposes. The City maintains seven miles of multi-purpose trails, which are unpaved and intended for hiking, horseback riding, and mountain biking. Trails are located in rural areas, generally in the southern and eastern parts of the City. The network includes an equestrian path that parallels the South Fork Trail, and one that parallels Sand Canyon Road. The City plans to develop another five to six miles of multi-purpose trails in the future.

The County also maintains a master plan for hiking trails in the Santa Clarita Valley, which was most recently updated in 2007. The City's and County's hiking and recreational trails are combined in the Valleywide Trail Master Plan, shown on Figure CO-9 in the Conservation and Open Space Element.

XIII. HEALTHY STREETS FOR WALKABLE COMMUNITIES

Although the location and alignment of local neighborhood streets are not typically addressed at the Area Plan level, the City and County share a common goal to ensure that neighborhood streets in urban areas are designed to be as safe and healthful as possible, for residents and pedestrians as well as drivers. This section addresses pedestrian safety in urban areas where full street improvements are required. While the need for public safety is also recognized in rural areas with unimproved streets, other design measures are appropriate in these areas in order to maintain rural character.

The need to consider pedestrian safety in street design has prompted traffic engineers to develop a variety of design options which generally seek to improve pedestrian safety in three ways: by separating pedestrians from vehicles (such as with pedestrian overpasses, refuge islands, and paseos); by making pedestrians more visible and conspicuous to drivers (such as through lighting, raised crosswalks, and "bulb-outs" of the sidewalk into the street at corners); and by reducing vehicle speeds (such as with traffic circles, narrowed travel lanes, curving roadways, raised intersections, and speed humps). These measures, often called "traffic-calming" devices, have been successfully used in many cities to slow traffic and improve pedestrian safety.

In California, the Local Government Commission has developed *Street Design Guidelines for Healthy Neighborhoods*[9], which outlines street-making guidelines initially prepared for communities in the San Joaquin Valley but that are widely applicable, based on their compliance with adopted standards of the Institute of Transportation Engineers (ITE), American Society of Civil Engineers (ASCE), the National Fire Code, and other national standards. The guidelines are intended to be used for development of new residential communities of six to twelve dwellings per acre and mixed use areas in proximity to transit, and for protection of existing traditional communities. Healthy streets are defined as "networks of roadways and connector trails in communities, designed primarily for use by people, not just motorized vehicles. Such streets are designed for motorists to feel comfortable operating at low speeds (15 to 20 mph). Low traffic volume and low noise, easy access, and multiple routes to destinations are also featured. Pedestrian and bicycle movements are favored." Healthy streets incorporate design characteristics such as the following:

- Interconnected networks linking mixed uses;
- Shorter block length (250 to 350 feet);
- Landscaped medians, parkways, and tree canopies;
- On-street parking;
- Sidewalks;
- Curbs and gutters (in favor of rolled curbs or swales);
- Street furniture and lighting;
- Transit stops within ¼-mile;

9 Burden, Dan. *Street Design Guidelines for Healthy Neighborhoods*, Local Government Commission , 2002.

- Building setbacks proportional to street width;
- Narrower intersections with smaller radii; and
- Speed control through geometrics, tee intersections and curves.

In addition to enhanced pedestrian and traffic safety, the use of narrower streets (where safe and appropriate) can have other benefits. According to *Livable Oregon*, the use of narrower street widths provides more efficient use of land, decreased storm water runoff, lower maintenance costs, increased market value, lower development costs, and an enhanced sense of community.

The Bay Area Stormwater Management Agencies Association has encouraged reducing impervious area throughout cities as a means of maintaining water quality. According to their publication *Start at the Source*[10], streets comprise up to 25 percent of the total land area in residential neighborhoods, and street pavement is often the largest component of total impervious land coverage. Residential streets provide a major opportunity for reducing pavement width to lower speeds, as well as reducing impervious surface area.

Many traditional residential neighborhoods developed prior to World War II were based on a prototypical residential subdivision designed by Frederick Law Olmsted for Riverside, Illinois in 1869, with a pavement width of 24 feet and 12-foot parkway strips planted with street trees and provided with five-foot sidewalks on both sides. After World War II new street standards were developed to accommodate increased automobile use, higher traffic volumes and greater speeds. The paved area was increased by up to 50 percent, with a typical residential street width of 36 feet, plus curb, gutter, and five-foot sidewalks on both sides, and often no landscaped parkway.

In 2006 the ITE published *Context Sensitive Solutions in Designing Major Urban Thoroughfares for Walkable Communities: An ITE Proposed Recommended Practice*. The report "provides guidance for the development of improvement projects on major urban thoroughfares, facilities that are typically classified as arterial and collector roadways in urbanized areas . . . and in the design of roadway improvement projects in places where community objectives support walkable communities – compact development, mixed land uses and support for pedestrians and bicyclists - whether it already exists or is a goal for the future." This document recommends an interdisciplinary team approach to designing thoroughfares, incorporating input from citizens, emergency services personnel, and other stakeholders to achieve community goals, and states that where the community has expressed a desire for walkable environments, context sensitive solutions can be used to create places with the following characteristics:

1. Mixed land uses in close proximity to one another;
2. Building entries that front directly onto the street without parking between entries and the public right-of-way;
3. Building, landscape and thoroughfare design that is pedestrian-scale, in other words, it provides architectural and urban design detail with size and design appreciated by persons who are traveling slowly and observing from the street level;
4. Relatively compact developments (both residential and commercial);
5. A highly-connected, multimodal circulation network, usually with a fine "grain" created by relatively small blocks; and
6. Thoroughfares and other public spaces that contribute to "placemaking" – the creation of unique locations that are compact, mixed-use and pedestrian- and transit-oriented and have a strong civic character with lasting economic value.

The references cited above, which address methods of creating walkable streets in residential neighborhood streets as well as along arterial thoroughfares, stress the need to coordinate land use and development patterns with street patterns. Mixed land uses, building orientations and setbacks, and location of parking are important components of creating walkable communities, in addition to street design. The ITE's *Context Sensitive Solutions* defines walkable communities as follows:

> Walkable communities are desirable places to live, work, learn and play. Their desirability comes from two factors. First, by locating, within an easy and safe walk, goods (such as housing, offices, and retail) and services (such as transportation, schools, libraries) that a community resident or employee needs on a regular basis. Second, by definition, walkable communities make pedestrian activity possible, thus expanding transportation options and creating a streetscape that better serves a range of users – pedestrians, bicy-

10 Bay Area Stormwater Management Agencies Association, *Start at the Source*, May, 2003, page 19.

clists, transit riders, and drivers. To foster walkability, communities must mix land uses and build compactly, and ensure safe and inviting pedestrian corridors.

Within the Santa Clarita Valley, much of the development during the last twenty years has been low-density with a suburban character, circuitous cul-de-sac street patterns, and wide streets. In many of these existing areas, large-scale changes to street patterns will not be feasible or desirable until redevelopment occurs many years in the future. However, small improvements may be used to enhance pedestrian connectivity by linking cul-de-sac bulbs to adjacent streets and transit stops, providing paseo links, and using traffic calming devices. Arterial streets can be made more walkable by provision of connected walkways, transit stops and shelters, street trees and landscaping, bulb-outs and refuge islands at intersections, and use of overpasses where appropriate and feasible.

The greatest opportunities in the Valley to create walkable communities exist in areas planned for infill development and redevelopment around transit centers, commercial corridors, mixed-use nodes, and new development. The City and County have identified a common goal to increase the health and livability of the community by encouraging the inclusion of walkable streets in these areas, and policies have been included in the Circulation Element to achieve this goal.

XIV. CIRCULATION SYSTEMS, CARBON EMISSIONS, AND GLOBAL CLIMATE CHANGE

In 2007 the Intergovernmental Panel on Climate Change of the United Nations published its finding that overwhelming evidence establishes that global warming is occurring and is caused by human activity. According to the State of California Attorney General's office:

> With respect to impacts in the State, the California Climate Change Center reports that temperatures are expected to rise 4.7 degrees Fahrenheit to 10.5 degrees Fahrenheit by the end of the century. These increases would have serious consequences, including substantial loss of snow-pack, an increase of as much as 55% in the risk of large wildfires, and reductions in the quality and quantity of agricultural products. Additionally, the report predicts increased stress on the State's vital resources and natural landscapes. Global warming will also slow the progress toward attainment of the ozone air quality standard by increasing the number of days that are meteorologically conducive to the formation of ozone.

In response to concerns about climate change, Assembly Bill 32 (AB 32), the California Global Warming Solutions Act of 2006 (codified at Health and Safety Code Section 38500 et seq.), was signed into law by the Governor on September 27, 2006. AB 32 requires reduction of the State's greenhouse gas (GHG) emissions to 1990 levels by 2020, a time within the planning horizon of this Area Plan. This emissions cap is equal to a 25 percent reduction from current levels. The bill directs that the California Air Resources Board (CARB) publish a list of early action emission reduction measures to be implemented by 2010. CARB's early action measures include reduction of emissions from fuel consumption. To further combat global warming, California is promoting the development of alternative technologies to reduce reliance on fossil fuels, including development of hydrogen and fuel cell technologies.

According to the California Energy Commission, transportation accounts for the largest single share of California's GHG emissions (41 percent). The Governor's Climate Action Team has identified increased vehicle efficiency, the use of bio-fuels, and planning measures, as strategies to reduce greenhouse gas emissions generated by transportation. The Climate Action Team identified land use planning as a strategy to reduce vehicle travel by more than 10 percent of the required reductions, including concentrating development in infill locations and at transit nodes to reduce the automobile mode share of vehicle trips, increasing transit ridership, and providing alternative transportation modes. Bond measures passed by California voters in 2006 earmarked funds for transit-oriented development and for incentives to promote planning, housing and infill development using smart growth planning principles.

Pursuant to AB 32, standards and regulations for measuring and mitigating GHG emissions were still being developed during the time this Area Plan was prepared. However, because of the importance of this issue and in response to the State's mandate that local agencies consider the effects of greenhouse gas emissions in local planning decisions, the City and County have incorporated policies in the Area Plan to reduce vehicle trips and thereby reduce carbon emissions through a variety of planning strategies. These

strategies include establishing an urban limit line on the Land Use Map, encouraging infill development through increased densities allowed in the urban core, encouraging mixed use development in specified land use designations, promoting transit oriented development around Metrolink stations and the bus transfer station, expanding bikeways and walkways, and using transportation demand management measures.

Future transportation technologies are being developed using alternative energy sources such as hydrogen cells and electric vehicles. Some communities are exploring opportunities for accommodating Neighborhood Electric Vehicles (NEV), which are capable of traveling up to 25 mph, are equipped with safety features, and may be operated on roads where the posted speed is 35 mph or less. Most of these devices are electric powered with zero emissions, and they are often used at resorts and senior communities. According to a recent publication from the American Planning Association:

> As fuel prices increase and people look for more environmentally friendly driving options, it is likely that the number of NEV's will increase. Most states already regulate them in some way, and transportation planners are beginning to examine the role of such vehicles in the roadway hierarchy. In some parts of the country, NEV's are most common in communities where there is a network of multi-use paths. In other places, they are found on bike paths. . . Communities that cater to seniors or focus on recreation often plan a network of paths specially designed for these vehicles.[11]

The City and County recognize that opportunities may exist to incorporate new vehicle technology into transit-oriented villages, as these areas are developed in the future. Therefore, policies have been added to the Circulation Element encouraging flexibility in transportation planning in order to maximize benefits from alternative travel modes as they become available.

XV. SUMMARY OF CIRCULATION NEEDS

Based on the existing conditions and transportation issues outlined in the background sections of the Circulation Element, the circulation planning needs for the Santa Clarita Valley are summarized below. Policies and objectives in the following section have been developed to address these needs.

1. Balance the needs for mobility and access in designing the roadway system.
2. Increase connectivity between neighborhoods and districts.
3. Maintain acceptable levels of service on streets and at intersections.
4. Comply with the County's Congestion Management Program and other regional transportation planning efforts.
5. Implement roadway improvements needed to build out the Highway Plan as identified by the traffic analysis (see Table C-2).
6. Reduce congestion and vehicle miles traveled by managing transportation systems and travel demand.
7. Make more efficient use of parking facilities, to reduce the cost of vehicle storage and to free land for other uses.
8. Enhance use of public transit by promoting transit-oriented, mixed use development near transit hubs.
9. Continue to explore opportunities for high speed rail connections to other regions, in cooperation with other agencies.
10. Enhance bus transit use through implementing recommendations of City of Santa Clarita Transit's planning efforts, including evaluation of bus rapid transit (BRT).
11. Evaluate park-and-ride lot locations and capacity, and expand facilities as needed.
12. Plan for and implement a regional bikeway network, to meet both recreational and non-motorized travel needs.

11 Hunter-Zaworski, Katharine, "Getting Around in an Aging Society," *Planning: the Magazine of the American Planning Association*, Volume 73, Number 5, page 25.

13. Make the Santa Clarita Valley a walkable community, by retrofitting pedestrian connections and facilities into existing development where needed, and by promoting healthy streets in new development.

14. Contribute to a regional reduction in greenhouse gas emissions through land use planning and transportation strategies.

XVI. GOALS, OBJECTIVES, AND POLICIES

The goals, objectives, and policies which apply to circulation are:

Goal C-1: Multi-Modal Circulation Network

An inter-connected network of circulation facilities that integrates all travel modes, provides viable alternatives to automobile use, and conforms with regional plans.

Objective C-1.1

Provide multi-modal circulation systems that move people and goods efficiently while protecting environmental resources and quality of life.

- **Policy C-1.1.1:** Reduce dependence on the automobile, particularly single-occupancy vehicle use, by providing safe and convenient access to transit, bikeways, and walkways.

- **Policy C-1.1.2:** Promote expansion of alternative transportation options to increase accessibility to all demographic and economic groups throughout the community, including mobility-impaired persons, senior citizens, low-income persons, and youth.

- **Policy C-1.1.3:** Work with local and regional agencies and employers to promote an integrated, seamless transportation system that meets access needs, including local and regional bus service, dial-a-ride, taxis, rail, van pools, car pools, bus pools, bicycling, walking, and automobiles.

- **Policy C-1.1.4:** Promote public health through provision of safe, pleasant, and accessible walkways, bikeways, and multi-purpose trail systems for residents.

- **Policy C-1.1.5:** Plan for efficient links between circulation systems at appropriate locations, including but not limited to bus-rail connections and pedestrian-bus connections.

- **Policy C-1.1.6:** Provide adequate facilities for multi-modal travel, including but not limited to bicycle parking and storage, expanded park-and-ride lots, and adequate station and transfer facilities in appropriate locations.

- **Policy C-1.1.7:** Consider the safety and convenience of the traveling public, including pedestrians and cyclists, in design and development of all transportation systems.

- **Policy C-1.1.8:** Acquire and/or reserve adequate right-of-way in transportation corridors to accommodate multiple travel modes, including bus turnouts, bus rapid transit (BRT), bikeways, walkways, and linkages to trail systems.

- **Policy C-1.1.9:** Incorporate funding for all modes of transportation in the capital improvement program, and seek funding from all available sources for multi-modal system development.

- **Policy C-1.1.10:** Provide for flexibility in the transportation system to accommodate new technology as it becomes available, in order to reduce trips by vehicles using fossil fuels where feasible and appropriate.

- **Policy C-1.1.11:** Promote use of multi-modal facilities by providing adequate and attractive way-finding programs directing users to transit stations, park-and-ride lots, bicycle storage, and other facilities.

- **Policy C-1.1.12:** Encourage the City of Santa Clarita to implement recommendations of its Non-Motorized Transportation Plan to expand opportunities for alternative travel modes.

- **Policy C-1.1.13:** Design new activity centers and improve existing activity centers to prioritize walking, bicycling and circulator transit for internal circulation of person-travel.

Objective C-1.2

Coordinate land use and circulation planning to achieve greater accessibility and mobility for users of all travel modes.

- **Policy C-1.2.1:** Develop coordinated plans for land use, circulation, and transit to promote transit-oriented development that concentrates higher density housing, employment, and commercial areas in proximity to transit corridors.

- **Policy C-1.2.2:** Create walkable communities, with paseos and walkways connecting residential neighborhoods to multi-modal transportation services such as bus stops and rail stations.

- **Policy C-1.2.3:** Require that new commercial and industrial development provide walkway connections to public sidewalks and transit stops.

- **Policy C-1.2.4:** Consider location, availability, and accessibility of transit in evaluating new development plans.

- **Policy C-1.2.5:** In mixed use projects, require compact development and a mix of land uses to locate housing, workplaces, and services within walking or bicycling distance of each other.

- **Policy C-1.2.6:** Provide flexible standards for parking and roadway design in transit-oriented development areas to promote transit use.

- **Policy C-1.2.7:** In pedestrian-oriented areas, provide a highly connected circulation grid with relatively small blocks to encourage walking.

- **Policy C-1.2.8:** Provide safe pedestrian connections across barriers, which may include but are not limited to major traffic corridors, drainage and flood control facilities, utility easements, grade separations, and walls.

- **Policy C-1.2.9:** Emphasize providing right-of-way for non-vehicular transportation modes so that walking and bicycling are the easiest, most convenient modes of transportation available for short trips.

- **Policy C-1.2.10:** Protect communities by discouraging the construction of facilities that sever residential neighborhoods.

- **Policy C-1.2.11:** Reduce vehicle miles traveled (VMT) through the use of smart growth concepts.

- **Policy C-1.2.12:** Balance the anticipated volume of people and goods movement with the need to maintain a walkable and bicycle friendly environment.

Objective C-1.3

Ensure conformance of the Circulation Plan with regional transportation plans.

- **Policy C-1.3.1:** Continue coordinating with the Metropolitan Transportation Authority (MTA or Metro) to implement the County's Congestion Management Program (CMP) for designated CMP roadways.

- **Policy C-1.3.2:** Through trip reduction strategies and emphasis on multi-modal transportation options, contribute to achieving the air quality goals of the South Coast Air Quality MManagement District Air Quality Management Plan.

- **Policy C-1.3.3:** Through trip reduction strategies and emphasis on multi-modal transportation options, contribute to achieving the air quality goals of the South Coast Air Quality Management District Air Quality Management Plan.

- **Policy C-1.3.4:** Coordinate circulation planning with the Regional Transportation Plan prepared by the Southern California Association of Governments (SCAG), to ensure consistency of planned improvements with regional needs.

- **Policy C-1.3.5:** Continue coordinating with Caltrans on circulation and land use decisions that may affect Interstate 5, State Route 14, and State Route 126, and support programs to increase capacity and improve operations on these highways.

- **Policy C-1.3.6:** Collaborate with Caltrans and Metro to implement the recommendations of the North County Combined Highways Corridor Study and support efforts by Metro to update this Study after SCAG adopts a Sustainable Communities Strategy.

- **Policy C-1.3.7:** Support the Golden State Gateway Coalition in its advocacy efforts to improve the Interstate 5 corridor, recognizing that the corridor facilitates regional and international travel that impacts the Santa Clarita Valley.

- **Policy C-1.3.8:** Ensure consistency with the County's adopted Airport Land Use Plan as it pertains to the Agua Dulce Airport, in order to mitigate aviation-related hazards and protect airport operations from encroachment by incompatible uses.

- **Policy C-1.3.9:** Support the expansion of Palmdale Regional Airport and the extension of multi-modal travel choices between the airport and the Santa Clarita Valley, in conformance with regional planning efforts.

- **Policy C-1.3.10:** Apply for regional, State, and Federal grants for bicycle and pedestrian infrastructure projects.

Goal C-2: Street and Highway System

A unified and well-maintained network of streets and highways which provides safe and efficient movement of people and goods between neighborhoods, districts, and regional centers, while maintaining community character.

Objective C-2.1

Implement the Circulation Plan (as shown on Exhibit C-2) for streets and highways to meet existing and future travel demands for mobility, access, connectivity, and capacity.

- **Policy C-2.1.1:** Protect mobility on arterial highways by limiting excessive cross traffic, access points, and turning movements; traffic signals on arterial highways should be spaced at least ½-mile apart, and the minimum allowable separation should be at least ¼-mile.

- **Policy C-2.1.2:** Enhance connectivity of the roadway network to the extent feasible given the constraints of topography, existing development patterns, and environmental resources, by constructing grade separations and bridges; connecting discontinuous streets; extending secondary access into areas where needed; prohibiting gates on public streets; and other improvements as deemed appropriate based on traffic analysis.

- **Policy C-2.1.3:** Protect and enhance the capacity of the roadway system by upgrading intersections to meet level of service standards, widening and/or restriping for additional lanes, synchronizing traffic signals, and other means.

- **Policy C-2.1.4:** Ensure that future dedication and acquisition of right-of-way is based on the adopted Circulation Plan, proposed land uses, and projected demand.

- **Policy C-2.1.5:** At the time of project review, monitor levels of service, traffic accident patterns, and physical conditions of the existing street system, and upgrade roadways as needed through the Capital Improvement Program.

Objective C-2.2

Adopt and apply consistent standards throughout the Santa Clarita Valley for street design and service levels, which promote safety, convenience, and efficiency of travel.

- **Policy C-2.2.1:** Designate roadways within the planning area based on their functional classification as shown on Exhibit C-2.

- **Policy C-2.2.2:** Adopt consistent standard street cross section for City and County roadways in the planning area, generally as shown on Exhibit C-3, or as otherwise approved by the County's Department of Public Works. Cross sections shall comply with State and Federal regulations and design guidelines.

- **Policy C-2.2.3:** Coordinate circulation plans of new development projects with each other and the surrounding street network, within both City and County areas.

- **Policy C-2.2.4:** Strive to maintain a Level of Service (LOS) D or better on most roadway segments and intersections to the extent practical; in some locations, a LOS E may be acceptable, or a LOS F may be necessary, for limited durations during peak traffic periods.

- **Policy C-2.2.5:** Adopt common standards for pavement width in consideration of capacity needs to serve projected travel demand, provided that a reduction in pavement width may be allowed in order to reduce traffic speeds, protect resources, enhance pedestrian mobility, or as otherwise deemed appropriate by the reviewing authority.

- **Policy C-2.2.6:** Within residential neighborhoods, promote the design of "healthy streets" which may include reduced pavement width, shorter block length, provision of on-street parking, traffic-calming devices, bike routes and pedestrian connectivity, landscaped parkways, and canopy street trees.

- **Policy 2.2.7:** Where practical, encourage the use of grid or modified grid street systems to increase connectivity and walkability; where cul-de-sacs are provided, promote the use of walkways connecting cul-de-sac bulbs to adjacent streets and/or facilities to facilitate pedestrian access; where street connectivity is limited and pedestrian routes are spaced over 500 feet apart, promote the use of intermediate pedestrian connections through or between blocks.

- **Policy C-2.2.8:** Local street patterns should be designed to create logical and understandable travel paths for users and to provide access between neighborhoods for local residents while discouraging cut-through traffic; cul-de-sac length should not exceed 600 feet, and "dog-leg" cul-de-sacs with one or more turns between the bulb and the outlet should be avoided where possible.

- **Policy C-2.2.9:** Medians constructed in arterial streets should be provided with paved crossover points for emergency vehicles, where deemed necessary by the Fire Department.

- **Policy C-2.2.10:** The street system design, including block length, width, horizontal and vertical alignments, curves, and other design characteristics, should function safely and effectively without the subsequent need for excessive traffic control devices to slow or deflect traffic.

- **Policy C-2.2.11:** For intersections of collector or larger streets, four-way intersections are preferred over offset intersections.

- **Policy C-2.2.12:** Private streets, other than driveways and alleyways typically associated with multi-family development, should be constructed to standards for public rights-of-way, except as otherwise approved by the reviewing agency.

- **Policy C-2.2.13:** Protect the community character of rural areas by requiring use of rural street standards, which may include reduced pavement width, reduced street lighting to protect night skies, rolled curbs or no curbs, and no sidewalks.

- **Policy C-2.2.14:** Streets should be designed in context with the terrain and the natural and built features of the area, but excessively circuitous streets should be avoided to minimize unnecessary vehicle, bicycle and pedestrian mileage.

- **Policy C-2.2.15:** Adopt consistent standards for implementation of Americans with Disabilities Act requirements such as curb ramp design and accessible pedestrian signals.

Objective C-2.3

Balance the needs of congestion relief with community values for aesthetics and quality of life.

- **Policy C-2.3.1:** Enhance community appearance through landscaping, street lighting, street furniture, bus shelters and benches, and other aspects of streetscape design within the right-of-way, where appropriate.

- **Policy C-2.3.2:** Encourage unified treatment of arterial streets within both City and County areas, while permitting flexibility of streetscape design between neighborhoods and districts to preserve village character.

- **Policy C-2.3.3:** When evaluating road widening projects, consider the impacts of additional traffic, noise, and fumes on adjacent land uses and use context-sensitive design techniques where appropriate.

- **Policy C-2.3.4:** Protect residential neighborhoods from cut-through traffic using local streets to avoid congested arterials, through use of street design and traffic control devices.

Objective C-2.4

Allow trucks to utilize only major and secondary highways as through routes, to minimize impacts of truck traffic on surface streets and residential neighborhoods.

- **Policy C-2.4.1:** Require design of pavement sections on major and secondary highways to account for truck traffic, to prevent excessive pavement deterioration from truck use.

- **Policy C-2.4.2:** Establish adequate setbacks from major and secondary highways for sensitive receptors and sensitive uses, so as to minimize impacts on these individuals and uses from noise and air pollution caused by truck traffic.

- **Policy C-2.4.3:** Prohibit through truck traffic on designated scenic routes.

- **Policy C-2.4.4:** Adopt regulations for truck parking on public streets, to avoid impacts to residential neighborhoods.

Objective C-2.5

Consider the needs for emergency access in transportation planning.

- **Policy C-2.5.1:** Maintain a current evacuation plan as part of emergency response planning.

- **Policy C-2.5.2:** Ensure that new development is provided with adequate emergency and/or secondary access for purposes of evacuation and emergency response; require two points of ingress and egress for every subdivision or phase thereof, except as otherwise approved for small subdivisions where physical constraints preclude a second access point.

- **Policy C-2.5.3:** Require provision of visible street name signs and addresses on all development to aid in emergency response.

- **Policy C-2.5.4:** Provide directional signage to Interstate 5 and State Route 14 at key intersections in the Valley, to assist emergency evacuation operations.

Objective C-2.6

Ensure that funding and phasing of new transportation improvements is coordinated with growth.

- **Policy C-2.6.1:** Require that new development construct or provide its fair share of the cost of transportation improvements, and that required improvements or in-lieu contributions are in place to support the development prior to occupancy.

- **Policy C-2.6.2:** Evaluate the feasibility of establishing a joint City/County Intelligent Transportation Management System (ITMS) impact fee for new development that is unable to otherwise mitigate its impacts to the roadway system through implementation of the adopted Highway Plan.

- **Policy C-2.6.3:** Coordinate with Caltrans and other local, regional, state and federal agencies in identifying and implementing funding alternatives for the Valley's transportation systems.

- **Policy C-2.6.4:** Coordinate road construction with improvements to other utility systems in the right-of-way.

Objective C-2.7:

Pursue the safety, efficiency, and tranquility of existing and future residential streets by properly planning for local, collector and arterial roadways and limiting residential driveway access onto collector or arterial roadways.

- **Policy C-2.7.1:** To the extent feasible, plan residential subdivisions with sufficient arterial and non-loaded collector streets so that projected traffic volumes on local residential streets with unrestricted driveway access remains below 2000 ADT.

- **Policy C-2.7.2:** Discourage direct driveway access onto collector streets within single-family residential subdivisions. Limit driveway access from multi-family residential and commercial development onto collector streets to the extent possible.

- **Policy C-2.7.3:** Where feasible, design new residential subdivisions with more than 200 residential units with direct access to an existing arterial roadway or an existing non-

loaded collector street. Discourage new large residential subdivisions from having primary access through local neighborhood streets.

Goal C-3: Vehicle Trip Reduction

Reduction of vehicle trips and emissions through effective management of travel demand, transportation systems, and parking.

Objective C-3.1

Promote the use of travel demand management strategies to reduce vehicle trips.

- **Policy C-3.1.1:** In evaluating new development projects, require trip reduction measures as feasible to relieve congestion and reduce air pollution from vehicle emissions.
- **Policy C-3.1.2:** Promote home-based businesses and live-work units as a means of reducing home-to-work trips.
- **Policy C-3.1.3:** Promote the use of flexible work schedules and telecommuting to reduce home to work trips.
- **Policy C-3.1.4:** Promote the use of employee incentives to encourage alternative travel modes to work.
- **Policy C-3.1.5:** Promote the use of van pools, car pools, and shuttles to encourage trip reduction.
- **Policy C-3.1.6:** Promote the provision of showers and lockers within businesses and employment centers, in order to encourage opportunities for employees to bicycle to work.
- **Policy C-3.1.7:** Encourage special event center operators to advertise and offer discounted transit passes with event tickets.
- **Policy C-3.1.8:** Encourage special event center operators to advertise and offer discount on-site parking incentives to carpooling patrons with four or persons per vehicle.

Objective C-3.2

Encourage reduction in airborne emissions from vehicles through use of clean vehicles and transportation system management.

- **Policy C-3.2.1:** Adopt clean vehicle purchase policies for City and County fleets.
- **Policy C-3.2.2:** Continue to enhance signal timing and synchronization to allow for free traffic flow, minimizing idling and vehicle emissions.
- **Policy C-3.2.3:** When available and feasible, provide opportunities and infrastructure to support use of alternative fuel vehicles and travel devices.
- **Policy C-3.2.4:** The City and County will encourage new commercial and retail developments to provide prioritized parking for electric vehicles and vehicles using alternative fuels.

Objective C-3.3

Make more efficient use of parking and maximize economic use of land, while decreasing impervious surfaces in urban areas, through parking management strategies.

- **Policy C-3.3.1:** Evaluate parking standards and reduce requirements where appropriate, based on data showing that requirements are in excess of demand.
- **Policy C-3.3.2:** In pedestrian-oriented, high density mixed use districts, provide for common parking facilities to serve the district, where appropriate.
- **Policy C-3.3.3:** Promote shared use of parking facilities between businesses with complementary uses and hours, where feasible.
- **Policy C-3.3.4:** Within transit-oriented development projects, provide incentives such as higher floor area ratio and/or lower parking requirements for commercial development that provides transit and ride-share programs.
- **Policy C-3.3.5:** Encourage convenient short-term parking in high-activity areas, and all day parking at the periphery of the development areas.
- **Policy C-3.3.6:** In the development review process, prioritize direct pedestrian access between building entrances, sidewalks and transit stops, by placing parking behind buildings where possible, to the sides of buildings when necessary, and always away from street intersections.

- **Policy C-3.3.7:** Create parking benefit districts which invest meter revenues in pedestrian infrastructure and other public amenities wherever feasible.

- **Policy C-3.3.8:** Establish performance pricing of street parking so that the costs are enough to promote frequent turnover, with a goal to keep 15 percent of spaces empty at all times, wherever feasible.

Goal C-4: Rail Service

Rail service to meet regional and inter-regional needs for convenient, cost-effective travel alternatives, which are fully integrated into the Valley's circulation systems and land use patterns.

Objective C-4.1

Maximize the effectiveness of Metrolink's commuter rail service through provision of support facilities and land planning.

- **Policy C-4.1.1:** Develop permanent Metrolink facilities with an expanded bus transfer station and additional park-and-ride spaces at the Via Princessa station, or other alternative location as deemed appropriate to meet the travel needs of residents on the Valley's east side.

- **Policy C-4.1.2:** Coordinate with other agencies to facilitate extension of a passenger rail line from the Santa Clarita Station to Ventura County, which may be used for Metrolink service.

- **Policy C-4.1.3:** Continue to expand and improve commuter services, including park-and-ride lots, bicycle parking and storage, and waiting facilities, at all Metrolink stations.

- **Policy C-4.1.4:** Encourage the preservation of abandoned railroad right-of-way for future transportation facilities, where appropriate.

- **Policy C-4.1.5:** Work with other agencies to increase rail efficiency and public safety through street and track improvements and grade separations, where needs are identified.

- **Policy C-4.1.6:** Provide incentives to promote transit-oriented development near rail stations.

- **Policy C-4.1.7:** Facilitate coordination of planning for any future high speed regional rail systems in the Valley with Metrolink services.

- **Policy C-4.1.8:** Minimize impacts to passenger rail service and the community from any proposed increase to freight rail service through the Valley.

Objective C-4.2

Access to a high speed rail system connecting the Santa Clarita Valley with other regions, and other regional rail service connections.

- **Policy C-4.2.1:** Continue to work with the Orange Line Development Authority (OLDA) to plan for development of an environmentally sensitive high speed transportation system with a route through the Santa Clarita Valley, including a regional transit hub with associated infrastructure that would provide connections to the Los Angeles Basin, Palmdale Regional Airport, and other destinations.

- **Policy C-4.2.2:** Coordinate with other agencies as needed to facilitate planning for other high-speed rail alternatives in the Santa Clarita Valley.

- **Policy C-4.2.3:** Promote and encourage the expansion of Amtrak Rail Service to the Santa Clarita Valley.

Goal C-5: Bus Transit

Bus transit service as a viable choice for all residents, easily accessible and serving destinations throughout the Valley.

Objective C-5.1

Ensure that street patterns and design standards accommodate transit needs.

- **Policy C-5.1.1:** Require that new subdivisions provide for two means of access into and out of the development, in order to provide for transit access, where feasible.

- **Policy C-5.1.2:** For private gated communities, require the developer to accommodate bus access through the entry gate, or provide bus waiting facilities at the project entry with pedestrian connections to residential streets, where appropriate.

- **Policy C-5.1.3:** Consider the operational characteristics of buses when determining acceptable street designs, including grades and turning radii.

- **Policy C-5.1.4:** Provide for location of bus stops within ¼-mile of residential neighborhoods, and include paved bus waiting areas in street improvement plans wherever appropriate and feasible.

- **Policy C-5.1.5:** Locate and design bus turnouts to limit traffic obstruction and to provide sufficient merging length for the bus to re-enter the traffic flow.

- **Policy C-5.1.6:** Evaluate the feasibility of giving buses priority at signalized intersections to maintain transit service level standards, where appropriate.

Objective C-5.2

Maximize the accessibility, safety, convenience, and appeal of transit stops.

- **Policy C-5.2.1:** Require paved waiting areas, accessible by paved walkways and reasonably direct pedestrian routes, for bus stops in new development; and provide for retrofitting of existing bus stops, where feasible and practicable.

- **Policy C-5.2.2:** Adopt and implement consistent design standards for use in both City and County areas for bus shelters, bus benches, trash receptacles, lighting, and other improvements for transit stops that are aesthetically pleasing and consistent with community character.

- **Policy C-5.2.3:** Adopt and implement common design standards for bus turnouts and merging lanes along arterial streets, in convenient, accessible locations.

- **Policy C-5.2.4:** Enhance way-finding signage along walkways and paseos to direct pedestrians to transit stops.

- **Policy C-5.2.5:** Complementary transportation modes should be interconnected at intermodal transit centers, including provisions for bicycles on buses, bicycle parking at transit centers, and park-and-ride at transit stops.

Objective C-5.3

Explore opportunities to improve and expand bus transit service.

- **Policy C-5.3.1:** Continue to provide fixed route service to significant activity areas and neighborhoods with moderate to high density, and serve low-density and rural areas with dial-a-ride, flexible fixed routes, or other transit services as deemed appropriate.

- **Policy C-5.3.2:** Promote concentrated development patterns in coordination with transit planning to maximize service efficiency and ridership.

- **Policy C-5.3.3:** Evaluate the feasibility of providing "fly-away" bus transit service to airports located at Burbank, Palmdale, and Los Angeles, and implement this program when warranted by demand.

- **Policy C-5.3.4:** Evaluate the feasibility of providing bus rapid transit (BRT) for key transit corridors when light-rail is not feasible or cost effective.

Objective C-5.4

Provide adequate funding to expand transit services to meet the needs of new development in the Valley.

- **Policy C 5.4.1:** Establish transit impact fee rates that are based on the actual impacts of new development on the transit system, and regularly monitor and adjust these fees as needed to ensure adequate mitigation.

- **Policy C-5.4.2:** Evaluate the feasibility of establishing a joint City/County transit impact fee to equitably distribute the capital costs of transit system expansion to meet the needs of new development in both County and City areas of the Valley.

- **Policy C-5.4.3:** Seek funding for transit system expansion and improvement from all available sources, including local, state, and federal programs and grants.

Goal C-6: Bikeways

A unified and well-maintained bikeway system with safe and convenient routes for commuting, recreational use and utilitarian travel, connecting communities and the region.

Objective C-6.1

Adopt and implement a coordinated master plan for bikeways for the Valley, including both City and County areas, to make bicycling an attractive and feasible mode of transportation.

- **Policy C-6.1.1:** For recreational riders, continue to develop Class 1 bike paths, separated from the right-of-way, linking neighborhoods to open space and activity areas.

- **Policy C-6.1.2:** For long-distance riders and those who bicycle to work or services, provide striped Class 2 bike lanes within the right-of-way, with adequate delineation and signage, where feasible and appropriate.

- **Policy C-6.1.3:** Continue to acquire or reserve right-of-way and/or easements needed to complete the bicycle circulation system as development occurs.

- **Policy C-6.1.4:** Where inadequate right-of-way exists for Class 1 or 2 bikeways, provide signage for Class 3 bike routes or designate alternative routes as appropriate.

- **Policy C-6.1.5:** Plan for continuous bikeways to serve major destinations, including but not limited to regional shopping areas, college campuses, public buildings, parks, and employment centers.

Objective C-6.2

Encourage provision of equipment and facilities to support the use of bicycles as an alternative means of travel.

- **Policy C-6.2.1:** Require bicycle parking, which can include bicycle lockers and sheltered areas, at commercial sites and multi-family housing complexes for use by employees and residents, as well as customers and visitors.

- **Policy C-6.2.2:** Provide bicycle racks on transit vehicles to give bike-and-ride commuters the ability to transport their bicycles.

- **Policy C-6.2.3:** Promote the inclusion of services for bicycle commuters, such as showers and changing rooms, as part of the review process for new development or substantial alterations of existing commercial or industrial uses, where appropriate.

Goal C-7: Pedestrian Circulation

Walkable communities, in which interconnected walkways provide a safe, comfortable and viable alternative to driving for local destinations.

Objective C-7.1

A continuous, integrated system of safe and attractive pedestrian walkways, paseos and trails linking residents to parks, open space, schools, services, and transit.

- **Policy C-7.1.1:** In reviewing new development proposals, consider pedestrian connections within and between developments as an integral component of the site design, which may include seating, shading, lighting, directional signage, accessibility, and convenience.

- **Policy C-7.1.2:** For existing walled subdivisions, extend pedestrian access to connect these neighborhoods to transit and services through public education and by facilitating retrofitted improvements where feasible.

- **Policy C-7.1.3:** Where feasible and practical, consider grade separated facilities to provide pedestrian connections across arterial streets, flood control channels, utility easements, and other barriers.

- **Policy C-7.1.4:** Identify and develop an improvement program to connect existing walkways and paseos to transit and services, where needed and appropriate.

- **Policy C-7.1.5:** In new commercial development, provide for direct, clearly delineated, and preferably landscaped pedestrian walkways from transit stops and parking areas to building entries, and avoid placement of uses (such as drive-through facilities) in locations that would obstruct pedestrian pathways.

- **Policy C-7.1.6:** Encourage placement of building entries in locations accessible to public sidewalks and transit.

- **Policy C-7.1.7:** Utilize pedestrian-oriented scale and design features in areas intended for pedestrian use.

- **Policy C-7.1.8:** Upgrade streets that are not pedestrian-friendly due to lack of sidewalk connections, safe street crossing points, vehicle sight distance, or other design deficiencies.

- **Policy C-7.1.9:** Promote pedestrian-oriented street design through traffic-calming measures where appropriate, which may include but are not limited to bulb-outs or chokers at intersections, raised crosswalks, refuge islands, striping, and landscaping.

- **Policy C-7.1.10:** Continue to expand and improve the Valley's multi-use trail system to provide additional routes for pedestrian travel.

XVII. IMPLEMENTATION OF THE CIRCULATION ELEMENT

The County of Los Angeles will implement the goals, objectives and policies of the Circulation Element of the Santa Clarita Valley Area Plan through the following actions.

- **Action 1:** Amend the Countywide Highway Plan within the Santa Clarita Valley to reflect the Area Plan and be consistent with the City's Highway Plan.
- **Action 2:** Adopt the standard street cross sections in the Area Plan, consistent with the City's street standards.
- **Action 3:** Ensure that all future street improvements conform to the adopted Highway Plan and street cross sections in the Area Plan.
- **Action 4:** Continue to monitor traffic conditions within the planning area on an ongoing basis, and amend the Area Plan as needed to address changing needs and conditions.
- **Action 5:** As part of the review process for proposed development projects, require traffic studies where appropriate to evaluate impacts to the roadway network, and require improvements as needed to maintain acceptable service levels.
- **Action 6:** Continue to coordinate with the City and other regional agencies to ensure orderly phasing of roadway improvements with new development as it occurs.
- **Action 7:** Continue to improve traffic operations through signal upgrades, striping, synchronization, and other improvements where needed.
- **Action 8:** Provide directional signage where needed to facilitate efficient traffic movement through the Valley.
- **Action 9:** Adopt the Valleywide Bikeway Plan in the Area Plan (as it may be amended from time to time).
- **Action 10:** Continue to require walkways, sidewalks, and trails within development projects as part of the approval process, consistent with adopted plans, special standards districts, and other applicable policies and regulations.
- **Action 11:** Annually update the Capital Improvement Program (CIP) to implement roadway improvements, trails, transit facilities, and other circulation facilities identified in the Area Plan.
- **Action 12:** Annually review the CIP to ensure consistency with the Circulation Element.
- **Action 13:** Ensure consistency with the Area Plan for all transportation improvement projects, including right-of-way acquisition and roadway design.
- **Action 14:** During development review of new projects, require integration of multi-modal circulation systems as part of project designs, to the extent feasible.
- **Action 15:** Through the regulatory and development review process, evaluate options for reducing the amount of land occupied by vehicle parking, which may include alternative parking options or flexible standards such as shared parking and off-site parking, where appropriate.
- **Action 16:** In coordination with the City, develop and implement uniform or compatible design standards for bus turnouts, benches, shelters, lighting, and furniture at bus stops within the Santa Clarita Valley.
- **Action 17:** Support construction of regional transportation improvements through joint funding programs and other efforts as appropriate.
- **Action 18:** Continue to actively participate on regional boards and commissions that address circulation needs and improvements.
- **Action 19:** Maintain consistency with regional plans, and complete all local plans needed to compete successfully for funding.
- **Action 20:** Continue to require new development to fund its fair share of transportation improvements, which may include construction or payment of impact fees.

THIS PAGE INTENTIONALLY LEFT BLANK