DEPT OF REGIONAL PLANNING
TR52584 EXHIBIT MAP
11 JUN 2013

# VESTING TENTATIVE TRACT MAP No. 052584

LOCATED IN THE UNINCORPORATED TERRITORY OF
THE COUNTY OF LOS ANGELES, STATE OF CALIFORNIA

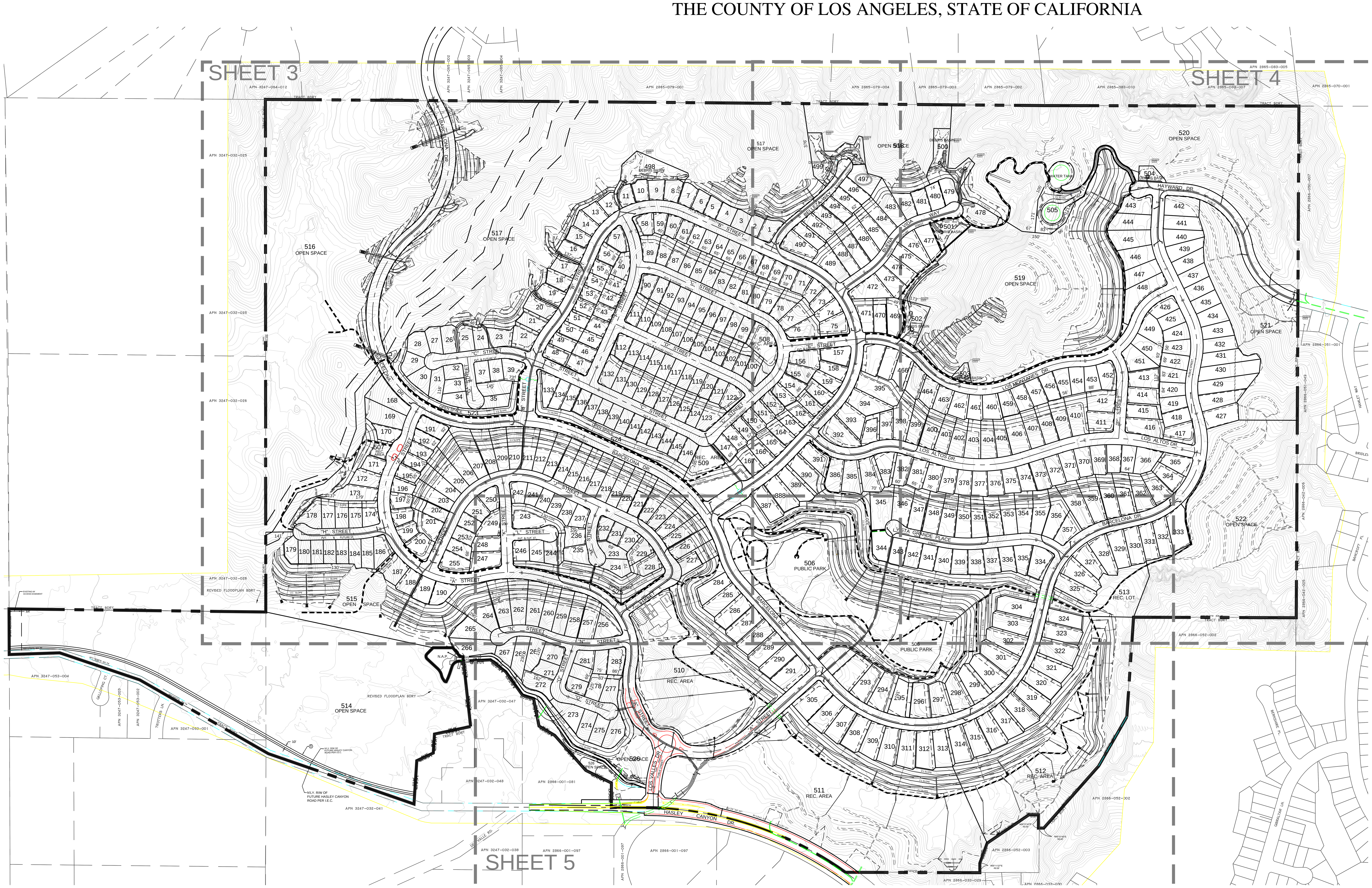


INDEX MAP

SCALE : 1"=200'

## LEGEND:

- ✱ – PRIVATE DWY AND FIRE LANE
- RM – EXISTING STRUCTURE TO BE REMOVED
- ⟨1⟩ – EASEMENT NOTES
- BVC – BEGINNING OF VERTICAL CURVE
- C.B. – CATCH BASIN
- ℄ – CENTER LINE
- DRWY – DRIVEWAY
- EL/ELEV – ELEVATION
- EVC – END OF VERTICAL CURVE
- EX./EXIST. – EXISTING
- FL – FLOW LINE
- FS – FINISH SURFACE
- GB – GRADE BREAK
- HP – HIGH POINT
- MIN. – MINIMUM
- MH – MANHOLE
- O.S. – OPEN SPACE
- PE – PAD ELEVATION
- PI – POINT OF INTERSECTION
- PL – PROPERTY LINE
- STD. – STANDARD
- TW – TOP OF WALL
- → – DIRECTION OF FLOW
- E.F.H. – EX. FIRE HYDRANT
- – TRACT BOUNDARY
- 1390 – PROPOSED CONTOURS
- (1400) – EXISTING CONTOURS
- – STREET & DRIVEWAY CENTERLINE
- D – DAYLIGHT LINE
- 2:1 – PROPOSED SLOPE AS INDICATED
- – PROP. CONC. WALL
- – PROP. PEDESTRIAN PATH (LOCATION PER PLAN)
- PP – POWER POLE
- – TREE
- 10 – LOT #
- – EX. STREET LIGHT
- OAK TREE 5' – OAK TREE WITH 5' PROTECTED ZONE
- – OAK TREE TO REMAIN (#1-#17 & #19-#22)
- ▲ – OAK TREE TO BE REMOVED (#18)
- ■ – OAK TREE TO BE ENCROACHED (--)
- S – PROPOSED SEWER LINE
- W – PROPOSED WATER LINE
- * – EASEMENT TO REMAIN
- ** – EASEMENT TO BE ABANDONED AND QUITCLAIMED (PRIOR TO RECORDATION OF FINAL MAP)
- *** – EASEMENT TO BE REMOVED
- – EXISTING OIL WELL LOCATION

## GENERAL NOTES:

1. AREA........±430.4 ACRES
2. EXISTING ZONING........A-2-2
3. PROPOSED ZONING........A-2-2
4. EXISTING SITE USE........VACANT, ABANDONED GOLF COURSE
5. DEVELOPMENT TYPE........RESIDENTIAL
6. TOTAL NUMBER OF SINGLE FAMILY LOTS........497
7. MINIMUM RESIDENTIAL LOT SIZE........7,000 SQ. FT.
8. DEVELOPMENT IS LOCATED IN FIRE ZONE 4.
9. STREET, PRIVATE AND FUTURE STREET, PRIVATE DRIVEWAY AND FIRE LANE GRADES MIN. 0.5%, MAX. 12% ON HAYWARD DRIVE.
10. TOPOGRAPHY IS BASED ON CONTROLLED TOPO W/ CONTOUR INTERVALS 2 FEET.
11. PUBLIC STREETS "A" THROUGH "F", LOS VALLES DR., BARCELONA DR., BELLEZA WAY, BUENA VIDA WAY, LOS MONTANES DR., LOS ALTOS DR., VISTA GRANDE PL., "P" STREET AND HAYWARD DR. ARE OFFERED FOR DEDICATION.
12. RESIDENTIAL STREETS "G" THROUGH "N", LAS VISTAS DR., LOS ARROYOS WAY AND BONITA VISTA DR. TO BE DESIGNATED AS "PRIVATEAND FUTURE STREETS". SUBDIVIDER RESERVES THE RIGHT TO CONSTRUCT GATES AND MEDIANS.
13. THE RIGHT IS RESERVED TO ADJUST STREET AND BUILDING PAD ELEVATIONS ON THE FINAL GRADING PLAN.
14. ALL SLOPES OVER 5 FEET IN HEIGHT ARE TO BE LANDSCAPED AND IRRIGATED WITH THE COUNTY APPROVED PLANTS AND GROUND COVER.
15. THE RIGHT IS RESERVED TO ADJUST LOT LINES AND MERGE LOTS ON THE FINAL MAP.
16. EXISTING AND PROPOSED COUNTYWIDE GENERAL PLAN........URBAN
17. EXISTING SANTA CLARITA VALLEY AREAWIDE LOCAL PLAN (OVOV)........H2
18. GROSS DENSITY........0.87 DU/AC
19. OAK TREES EXISTING WITHIN PROJECT BOUNDARY ARE SUBJECT TO A LOS ANGELES COUNTY OAK TREE PERMIT.
20. BOUNDARY LINE DIMENSIONS ARE TAKEN FROM RECORD DATA LOT AREAS SHOWN IN TABLE HEREON ARE GROSS ACREAGE.
21. SUBDIVIDER REQUESTS ALTERNATE STREET SECTIONS PER SECTION 21.24.090 OF LOS ANGELES COUNTY SUBDIVISION CODE TITLE 21.
22. SUBDIVIDER RESERVES THE RIGHT TO FILE MULTIPLE FINAL MAPS PER SECTION 66456.1 OF THE STATE MAP ACT.
23. NUMBER AND TYPE OF LOTS PROPOSED:

| | |
|---|---|
| 497 | SINGLE FAMILY LOTS |
| 7 | REC. LOTS TO H.O.A. |
| 13 | OPEN SPACE LOTS |
| 1 | PARK LOTS |
| 1 | WATER TANK LOT |
| 7 | STORM DRAIN MAINTENANCE LOTS |
| 526 | TOTAL LOTS |

24. PROPERTY LINE RETURN RADII TO BE 13 FT. AT ALL LOCAL STREET INTERSECTIONS, INCLUDING INTERSECTION OF LOCAL STREETS WITH PLANNED HIGHWAYS (THOSE ON THE COUNTY HIGHWAY PLAN), AND 27 FT. WHERE ALL PLANNED HIGHWAYS INTERSECT.
25. TOP & TOE OF SLOPES ARE SUBJECT TO CHANGE IN FINAL ENGINEERING.
26. A LANDSCAPE MAINTENANCE DISTRICT OR H.O.A. WILL BE ESTABLISHED FOR MAINTENANCE OF PRIVATE & FUTURE STREETS, OPEN SPACE SLOPES AND COMMON SLOPES OVER 5 FEET IN HEIGHT.
27. PERMISSION IS REQUESTED TO ABANDON ALL OF THE COUNTY EASEMENTS FOR DRAINAGE PURPOSES BY THE FINAL MAP PURSUANT TO SECTION 66499.20 OF THE STATE GOVERNMENT CODE (IF ANY).
28. TOTAL CUT: 4,400,000 C.Y. TOTAL FILL: 3,900,000 C.Y. (BALANCED ON SITE)
29. GRADE ELEVATIONS SHOWN IN THIS MAP AND ACCOMPANYING EXHIBIT 'A' ARE APPROXIMATE. THE ELEVATIONS MAY CHANGE BY 5 FEET. ELEVATION CHANGES MAY BE GREATER THAN 5 FEET BUT ONLY IF DETERMINED BY DPW AND DRP THAT THE REVISIONS ARE CONSISTENT WITH THE INTENT OF THE SUBDIVISION MAP APPROVAL.
30. ALIGNMENT AND GEOMETRICS OF STREETS ARE APPROXIMATE. ADJUSTMENTS TO STREETS CAN BE MADE PROVIDED THE DEPARTMENT OF PUBLIC WORKS AND DRP DETERMINE THAT THE ADJUSTMENTS ARE CONSISTENT WITH THE INTENT OF THE SUBDIVISION APPROVAL.
31. BUILDING FOOTPRINTS THAT ARE SHOWN ON THE SUBDIVISION MAP OR ACCOMPANYING EXHIBIT MAP ARE ONLY FOR ILLUSTRATIVE PURPOSES. ACTUAL BUILDING LOCATIONS SHALL BE GRANTED PROVIDED THE PROPOSED BUILDING LOCATIONS SATISFY ALL EXISTING CODES AND ORDINANCES. THIS MINOR CHANGE DOES NOT, HOWEVER, INCLUDE THE CHANGE IN PROPOSED LAND USE OR RESIDENTIAL HOUSING PRODUCT.
32. LOT LINES CAN BE ADJUSTED PROVIDED NO ADDITIONAL LOTS ARE CREATED. THE DEGREE OF ADJUSTMENT SHALL BE CONSISTENT WITH THE INTENT OF THE SUBDIVISION MAP ACT.
33. THE RECORDATION OF A "LARGE LOT" PARCEL MAP SHALL NOT REQUIRE THE OBLIGATION OF FEES, DEDICATIONS (E.G., RIGHTS-OF-WAY OR PARKS), EXACTIONS, OR INFRASTRUCTURE AS MAY BE OTHERWISE REQUIRED FOR THE SUBDIVISION, EXCEPT AS MAY BE REQUIRED BY CHAPTER 21.32 OF THE SUBDIVISION CODE.
34. THE RECORDATION OF A "LARGE LOT" PARCEL MAP SHALL BE CONSIDERED THE FILING OF THE FIRST UNIT FOR THE PURPOSE OF TIME EXTENSIONS PURSUANT TO THE SUBDIVISION MAP ACT.
35. PERMISSION IS REQUESTED FOR UNIT PHASING AND FILING OF MULTIPLE FINAL MAPS.
36. PERMISSION IS REQUESTED TO COMBINE LOTS.
37. PERMISSION IS REQUESTED TO RECORD ADDITIONAL OPEN SPACE LOTS.
38. PERMISSION IS REQUESTED TO RECORD ADDITIONAL UTILITIES LOTS, PROVIDED MAINTENANCE EASEMENTS ARE GRANTED TO THE SATISFACTION OF THE DRP AND DPW.
39. PROPOSED STREET GRADING IS APPROXIMATE ONLY AND SUBJECT TO ADJUSTMENTS PENDING DETERMINATION OF FINAL DEVELOPMENT LAYOUT AND PLANS.
40. REQUEST PERMISSION TO MASS GRADE.
41. REFER TO PROJECT DRAINAGE CONCEPT FOR WATER QUALITY TREATMENT DESIGN

## UTILITIES AND SERVICES:

1. WATER........COUNTY WATER DISTRICT NO. 36
2. SEWER........SANTA CLARITA VALLEY
3. GAS........SOUTHERN CALIFORNIA GAS COMPANY
4. ELECTRIC........SOUTHERN CALIFORNIA EDISON COMPANY
5. TELEPHONE........GENERAL TELEPHONE
6. CABLE TV........TBD
7. SCHOOL........CASTAIC SCHOOL DISTRICT & WILLIAM S. HART UNIFIED HIGH SCHOOL DISTRICT

GRAPHIC SCALE
(IN FEET)
200 100 0 200 400 600

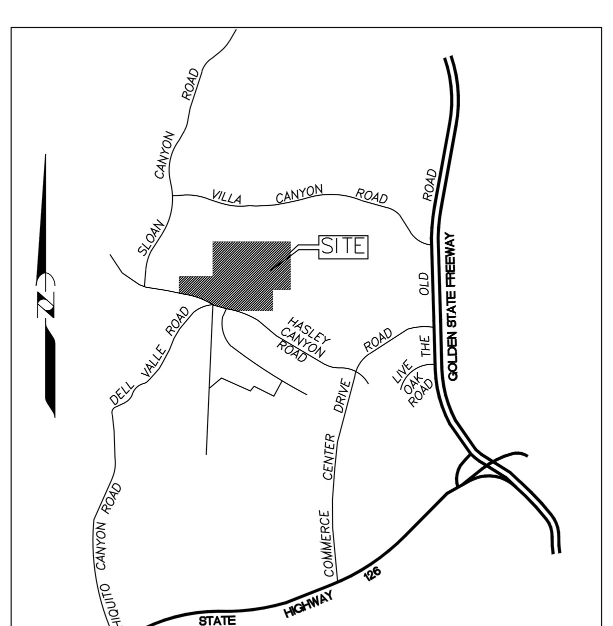


VICINITY MAP
NOT TO SCALE

## NOTES:

TREES SHOWN ARE CONCEPTUAL ONLY AND THE TYPES AND NUMBERS WILL BE DETERMINED AT A LATER DATE

### PLANT MATERIAL LIST

(Plant material provided shall be selected from this list)

**TREES:**
(Street tree type & Location is Subject to Park & Recreation Department approval)

*Fraxinus velutina* "Modesto"
*Lagerstroemia indica* "Rose"
*Pinus halepensis*
*Eucalyptus rudis*
*Robinia* "Idaho"
*Albizia julibrissia*
*Cinnamomum camphora*
*Prunus caroliniana*
*Koelreuteria henryi*
*Pistacia chinensis*
*Pyrus kawakamii*
*Liquidambar straciflua*

**SHRUBS:**

*Photinia fraseri*
*Agapanthus* "Peter Pan"
*Callistemon cirtinus*
*Elaegnus pungens*
*Hemerocallis* - Yellow
*Ilex Cornuta* "Dazzler"
*Mahonia quifolium*
*Morea irisioides*
*Nandina domestica*
*Nerium oleander*
*Osmanthus fragrans*
*Pittosporum tobria variegata*
*Raphiolephis indica* "Jack Evans"
*Ternstroemia japonica*
*Trachelospermum jasminoides*

**GROUNDCOVER:**

*Baccharis pilularia* "Twin Peaks"
*Hedera helix* "Needle Point Ivy"
Turf seed

**VINES:**

*Cyltostoma callistegioides*
*Doxantha uguis-cati*
*Parthenocissus tricuspidata*

### TYPICAL BUILDING ELEVATIONS

Not To Scale
(BUILDINGS ARE CONCEPTUAL ONLY)

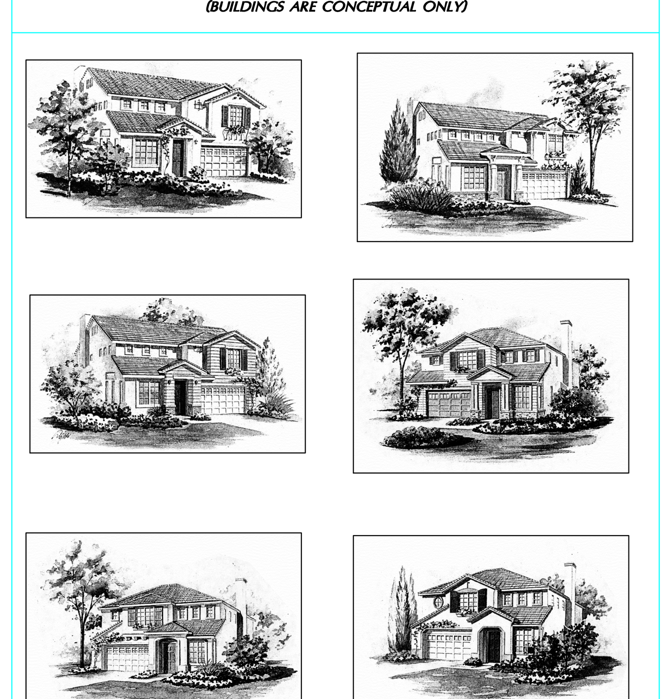

SINGLE TWO-STORY RESIDENTIAL

### BENCH MARK

NEWHALL 1995 L 5274

DESCRIPTION: DPW BM TAG IN TOP OF FLAT ROCK & CONC 19 M S/O C/L HASLEY CYN RD & 7M E/O C/L DEL VALLE RD 5.2 M N/O FIRE HYD.

ELEVATION 1211.458

| PROPERTY APN |
|---|
| 2866-062-032, -033 |
| 3247-032-052 |

### DRAINAGE NOTES

1. – STORM DRAIN EASEMENT TO BE DEDICATED TO L.A. COUNTY
2. – PROPOSED STORM DRAIN LINE
3. – CONCRETE SWALE TO BE MAINTAINED BY H.O.A. PER DETAILS SEE HEREON
5. – BULK FLOW INLET STRUCTURE
6. – DESILTING INLET STRUCTURE
7. – PROPOSED FEE-TITLE LOT TO LACFCD
8. – CONCRETE TERRACE DRAIN TO BE MAINTAINED BY H.O.A.
9. – CATCH BASIN WITH INSERT
10. – OUTLET STRUCTURE / RIP-RAP PAD
11. – RIP-RAP PAD
12. –EXISTING LACFCD EASEMENT
13. –15' WIDE ACCESS ROAD TO BE DEDICATED TO L.A. COUNTY
14. –MINI DEBRIS BASIN WITH STAND PIPE TO BE MAINTAINED BY H.O.A.
15. –DOWN DRAIN INLET TO BE MAINTAINED BY H.O.A.
16. – PROPOSED PRIVATE STORM DRAIN LINE
17. – PROPOSED INFILTRATION BASIN TO BE MAINTAINED BY H.O.A.

OWNER/DEVELOPER:

SFI LOS VALLES LLC
10960 WILSHIRE BLVD., SUITE 1260 LOS ANGELES, CA 90024
PH.: (310) 315-5566 FAX: (310) 315-7017

LEGAL DESCRIPTION:

SEE SHEET NO. 2

C.U.P. EXHIBIT "A"
MAJOR LAND DIVISION
REVISED
VESTING TENTATIVE TRACT MAP NO.
052584
IN THE UNINCORPORATED TERRITORY OF COUNTY OF LOS ANGELES, STATE OF CALIFORNIA.

DRAWN BY LDC.
CHECKED BY C.G.
DESIGNED BY LDC

| DATE CHANGED | CHANGED BY | REVISION |
|---|---|---|

REGISTERED PROFESSIONAL ENGINEER CHARLES A. GILMAN No. 54155 Exp. 12-31-13 CIVIL STATE OF CALIFORNIA

PREPARED BY:

LAND DESIGN CONSULTANTS, INC.
Land Planning, Civil Engineering, Surveying & Environmental Services
199 South Los Robles Ave., Suite 250, Pasadena, California 91101
Ph.: (626) 578-7000, Fax: (626) 578-7373
http://www.ldcla.com

Charles A. Gilman, R.C.E. No. C54155 06-04-2013 DATE

LDC

Project. No. 11018-001



J:\Civil 3D Projects\1018001\50_Sheet Sets\10_Planning\CUP\SHEET 01.dwg Jun 04, 2013 10:10 am MIHALY

DEPT OF REGIONAL PLANNING
TR52584 EXHIBIT MAP PG 2
11 JUN 2013

# LOT SCHEDULE

∗ NOTE: SEE NET LOT AREA TABLE BELOW

| Lot No. | Area (SF) Gross | PAD AREA (SF) | Lot No. | Area (SF) Gross | PAD AREA (SF) | Lot No. | Area (SF) Gross | PAD AREA (SF) | Lot No. | Area (SF) Gross | PAD AREA (SF) | Lot No. | Area (SF) Gross | PAD AREA (SF) | Lot No. | Area (SF) Gross | PAD AREA (SF) | Lot No. | Area (SF) Gross | PAD AREA (SF) |
|---|---|---|---|---|---|---|---|---|---|---|---|---|---|---|---|---|---|---|---|---|
| 1 | 9,569 | 8,677 | 78 | 14,298 | 8,298 | 155 | 10,064 | 8,969 | ∗ 232 | 8,205 | 6,977 | 309 | 16,375 | 13,439 | 386 | 13,696 | 12,172 | 463 | 10,816 | 9,280 |
| 2 | 7,301 | 7,135 | 79 | 11,549 | 6,222 | 156 | 13,315 | 11,719 | ∗ 233 | 9,677 | 9,062 | 310 | 17,662 | 14,351 | 387 | 16,040 | 12,938 | 464 | 10,901 | 9,267 |
| 3 | 7,888 | 7,864 | 80 | 10,281 | 5,988 | 157 | 12,623 | 11,246 | ∗ 234 | 10,297 | 10,125 | 311 | 17,527 | 14,466 | 388 | 16,888 | 13,611 | 465 | 12,172 | 10,225 |
| 4 | 7,944 | 7,934 | 81 | 10,239 | 5,926 | 158 | 9,794 | 7,911 | 235 | 11,128 | 10,394 | 312 | 17,882 | 14,756 | 389 | 18,296 | 14,006 | 466 | 13,370 | 11,336 |
| 5 | 7,064 | 6,529 | 82 | 10,081 | 6,278 | 159 | 10,138 | 7,816 | 236 | 10,300 | 9,308 | 313 | 17,947 | 14,552 | 390 | 18,534 | 12,077 | 467 | 12,267 | 11,040 |
| 6 | 7,442 | 6,867 | 83 | 9,978 | 6,273 | 160 | 10,831 | 6,891 | 237 | 9,156 | 8,016 | 314 | 17,419 | 14,019 | 391 | 14,869 | 9,594 | 468 | 15,609 | 11,226 |
| 7 | 8,685 | 7,752 | 84 | 9,982 | 6,218 | 161 | 9,581 | 5,920 | 238 | 7,693 | 7,687 | 315 | 16,714 | 13,615 | 392 | 21,226 | 13,087 | 469 | 15,232 | 9,907 |
| 8 | 10,202 | 9,007 | 85 | 9,899 | 6,158 | 162 | 9,697 | 5,649 | 239 | 7,093 | 7,093 | 316 | 16,662 | 13,731 | 393 | 15,307 | 13,396 | 470 | 12,526 | 9,255 |
| 9 | 8,472 | 7,905 | 86 | 9,765 | 5,985 | 163 | 10,154 | 5,871 | ∗ 240 | 7,085 | 7,085 | 317 | 16,830 | 13,732 | 394 | 18,378 | 15,703 | 471 | 14,068 | 8,795 |
| 10 | 8,399 | 7,640 | 87 | 10,709 | 6,052 | 164 | 10,406 | 6,255 | ∗ 241 | 7,800 | 7,800 | 318 | 18,110 | 14,524 | 395 | 25,466 | 15,743 | 472 | 17,849 | 14,858 |
| ∗ 11 | 8,729 | 6,905 | 88 | 10,713 | 5,826 | 165 | 11,222 | 6,681 | 242 | 9,031 | 7,376 | 319 | 17,242 | 14,180 | 396 | 12,886 | 7,557 | 473 | 13,108 | 10,562 |
| 12 | 7,848 | 6,895 | 89 | 12,378 | 7,159 | 166 | 11,536 | 6,881 | ∗ 243 | 26,383 | 11,443 | 320 | 17,129 | 13,661 | 397 | 10,560 | 8,184 | 474 | 12,728 | 10,009 |
| 13 | 8,827 | 7,600 | 90 | 9,436 | 6,509 | 167 | 11,751 | 6,589 | ∗ 244 | 13,604 | 9,050 | 321 | 18,435 | 14,661 | 398 | 19,874 | 10,516 | 475 | 12,681 | 10,403 |
| 14 | 9,729 | 8,267 | 91 | 7,565 | 7,057 | 168 | 21,274 | 19,314 | 245 | 8,529 | 8,523 | 322 | 19,443 | 15,452 | 399 | 16,726 | 7,618 | 476 | 12,412 | 10,394 |
| 15 | 8,835 | 7,532 | 92 | 7,609 | 7,607 | 169 | 20,420 | 18,527 | 246 | 9,181 | 7,501 | 323 | 16,582 | 13,337 | 400 | 16,436 | 7,616 | 477 | 14,356 | 13,460 |
| ∗ 16 | 11,212 | 7,590 | 93 | 7,679 | 7,620 | 170 | 9,291 | 8,016 | 247 | 14,445 | 9,965 | 324 | 12,600 | 12,848 | 401 | 13,335 | 7,317 | 478 | 17,483 | 11,264 |
| ∗ 17 | 10,578 | 8,088 | 94 | 7,620 | 7,620 | 171 | 8,642 | 7,466 | 248 | 11,556 | 8,084 | 325 | 16,987 | 15,082 | 402 | 14,419 | 9,151 | 479 | 9,494 | 9,490 |
| 18 | 10,248 | 7,831 | 95 | 7,620 | 7,620 | 172 | 11,727 | 9,873 | 249 | 12,419 | 8,951 | 326 | 17,114 | 12,477 | 403 | 15,189 | 9,703 | 480 | 10,339 | 9,793 |
| ∗ 19 | 12,174 | 7,708 | 96 | 7,731 | 7,214 | 173 | 17,353 | 15,923 | 250 | 9,901 | 8,044 | 327 | 15,158 | 10,651 | 404 | 14,967 | 10,338 | 481 | 9,589 | 8,923 |
| ∗ 20 | 12,882 | 9,250 | 97 | 7,729 | 7,214 | 174 | 10,851 | 6,996 | 251 | 9,798 | 8,932 | 328 | 17,531 | 13,834 | 405 | 12,974 | 8,510 | 482 | 10,770 | 10,134 |
| 21 | 10,885 | 7,866 | 98 | 7,705 | 7,138 | 175 | 9,747 | 7,225 | 252 | 7,863 | 7,422 | 329 | 16,086 | 13,565 | 406 | 19,144 | 12,461 | 483 | 19,152 | 11,591 |
| 22 | 14,399 | 8,678 | 99 | 8,253 | 8,065 | 176 | 9,993 | 7,599 | 253 | 7,603 | 7,142 | 330 | 15,394 | 12,816 | 407 | 15,238 | 9,818 | 484 | 13,996 | 9,299 |
| ∗ 23 | 12,159 | 10,089 | 100 | 9,553 | 5,831 | 177 | 10,619 | 8,358 | 254 | 8,804 | 8,339 | 331 | 14,201 | 11,648 | 408 | 15,606 | 10,151 | 485 | 15,042 | 10,622 |
| ∗ 24 | 8,520 | 7,408 | 101 | 9,311 | 5,663 | 178 | 12,905 | 10,424 | 255 | 13,391 | 9,326 | 332 | 14,769 | 12,114 | 409 | 16,117 | 10,232 | 486 | 16,390 | 10,821 |
| ∗ 25 | 11,416 | 8,352 | 102 | 9,596 | 5,126 | 179 | 8,565 | 8,242 | 256 | 16,162 | 10,404 | 333 | 18,983 | 18,471 | 410 | 21,566 | 10,730 | 487 | 16,109 | 10,554 |
| ∗ 26 | 11,293 | 9,483 | 103 | 9,515 | 5,450 | 180 | 7,894 | 7,856 | 257 | 16,913 | 10,291 | 334 | 15,939 | 12,894 | 411 | 14,639 | 10,342 | 488 | 14,471 | 9,590 |
| 27 | 10,039 | 9,542 | 104 | 9,491 | 5,491 | 181 | 7,930 | 7,930 | 258 | 16,356 | 10,448 | 335 | 11,703 | 9,913 | 412 | 15,913 | 11,657 | 489 | 18,758 | 11,886 |
| 28 | 12,164 | 11,892 | 105 | 9,489 | 5,490 | 182 | 7,995 | 7,995 | ∗ 259 | 16,449 | 10,500 | 336 | 10,210 | 9,972 | 413 | 15,284 | 12,748 | 490 | 17,184 | 11,109 |
| 29 | 10,296 | 10,296 | 106 | 9,600 | 6,000 | 183 | 8,125 | 8,125 | ∗ 260 | 16,026 | 9,616 | 337 | 10,434 | 10,136 | 414 | 13,701 | 11,120 | 491 | 11,215 | 8,972 |
| 30 | 10,861 | 10,846 | 107 | 9,600 | 6,000 | 184 | 9,057 | 8,938 | ∗ 261 | 20,065 | 10,335 | 338 | 10,782 | 10,260 | 415 | 13,508 | 10,262 | 492 | 10,486 | 8,728 |
| 31 | 11,238 | 11,238 | 108 | 9,541 | 5,880 | 185 | 10,169 | 10,156 | ∗ 262 | 20,953 | 10,290 | 339 | 10,841 | 10,331 | 416 | 17,464 | 12,881 | 493 | 10,100 | 8,727 |
| 32 | 7,451 | 7,451 | 109 | 9,611 | 6,004 | 186 | 11,787 | 9,203 | 263 | 21,872 | 10,023 | 340 | 10,775 | 10,249 | 417 | 14,894 | 8,397 | 494 | 9,703 | 8,269 |
| 33 | 7,732 | 7,732 | 110 | 9,654 | 5,635 | 187 | 15,694 | 10,414 | 264 | 39,673 | 12,644 | 341 | 10,295 | 9,780 | 418 | 10,548 | 9,982 | 495 | 9,734 | 8,813 |
| 34 | 9,316 | 9,316 | 111 | 11,766 | 5,368 | ∗ 188 | 11,050 | 9,394 | 265 | 15,735 | 15,669 | 342 | 10,543 | 10,015 | 419 | 9,856 | 9,710 | 496 | 10,321 | 9,670 |
| 35 | 8,760 | 8,712 | 112 | 10,264 | 7,502 | 189 | 10,958 | 10,495 | 266 | 17,823 | 16,890 | 343 | 10,774 | 10,249 | 420 | 9,786 | 9,666 | 497 | 14,690 | 14,057 |
| 36 | 11,572 | 11,572 | 113 | 7,740 | 7,740 | 190 | 11,009 | 10,322 | ∗ 267 | 9,595 | 9,577 | 344 | 14,378 | 15,677 | 421 | 10,070 | 9,987 | 498 | 37,258 | - |
| 37 | 8,439 | 8,139 | 114 | 7,680 | 7,620 | 191 | 12,236 | 11,020 | ∗ 268 | 14,015 | 14,015 | ∗ 345 | 22,322 | 19,147 | 422 | 10,388 | 10,355 | 499 | 40,187 | - |
| 38 | 7,908 | 7,488 | 115 | 7,679 | 7,618 | 192 | 8,699 | 7,893 | ∗ 269 | 11,690 | 11,690 | 346 | 19,069 | 11,586 | 423 | 10,291 | 9,481 | 500 | 36,175 | - |
| 39 | 10,790 | 8,256 | 116 | 7,679 | 7,620 | 193 | 7,632 | 6,684 | ∗ 270 | 10,415 | 9,570 | 347 | 16,772 | 10,070 | 424 | 9,883 | 8,922 | 501 | 19,455 | - |
| 40 | 10,507 | 8,110 | 117 | 7,679 | 7,620 | 194 | 7,317 | 6,203 | ∗ 271 | 9,290 | 8,949 | 348 | 17,438 | 9,928 | 425 | 9,503 | 9,407 | 502 | 23,804 | - |
| 41 | 7,963 | 5,169 | 118 | 7,696 | 7,636 | 195 | 7,988 | 6,579 | ∗ 272 | 13,541 | 11,779 | 349 | 17,314 | 10,619 | 426 | 10,462 | 8,436 | 503 | 7,114 | - |
| 42 | 7,500 | 5,469 | 119 | 7,502 | 7,502 | 196 | 8,577 | 6,712 | ∗ 273 | 14,244 | 14,244 | 350 | 16,279 | 10,486 | 427 | 16,613 | 13,809 | 504 | 8,518 | - |
| 43 | 7,500 | 5,259 | 120 | 7,615 | 6,606 | 197 | 8,749 | 6,347 | ∗ 274 | 11,019 | 11,019 | 351 | 16,398 | 10,215 | 428 | 16,405 | 14,805 | 505 | 65,421 | - |
| 44 | 8,620 | 6,154 | 121 | 7,611 | 6,849 | 198 | 8,941 | 5,930 | ∗ 275 | 10,564 | 10,564 | 352 | 16,417 | 9,339 | 429 | 20,169 | 19,654 | 506 | 848,665 | - |
| 45 | 7,591 | 5,938 | 122 | 10,888 | 6,252 | 199 | 8,410 | 5,942 | ∗ 276 | 13,551 | 13,361 | 353 | 16,113 | 9,403 | 430 | 22,200 | 22,107 | 507 | 87,147 | - |
| 46 | 7,984 | 6,743 | 123 | 13,664 | 7,3.64 | 200 | 13,577 | 7,257 | ∗ 277 | 12,125 | 10,406 | 354 | 18,046 | 9,191 | 431 | 16,995 | 16,995 | 508 | 29,027 | - |
| 47 | 9,439 | 7,150 | 124 | 9,485 | 5,681 | 201 | 15,320 | 8,449 | ∗ 278 | 10,857 | 9,969 | 355 | 18,090 | 10,457 | 432 | 12,214 | 11,822 | 509 | 58,917 | - |
| 48 | 10,379 | 6,400 | 125 | 9,598 | 5,574 | 202 | 11,915 | 7,587 | 279 | 8,151 | 7,117 | 356 | 20,618 | 12,837 | 433 | 11,526 | 11,526 | 510 | 426,780 | - |
| 49 | 8,933 | 6,635 | 126 | 9,404 | 5,390 | 203 | 16,028 | 7,774 | ∗ 280 | 7,700 | 7,347 | 357 | 12,852 | 8,936 | 434 | 12,429 | 12,429 | 511 | 764,295 | - |
| 50 | 8,140 | 7,786 | 127 | 9,421 | 5,824 | 204 | 17,336 | 8,365 | ∗ 281 | 8,266 | 8,283 | 358 | 22,989 | 13,813 | 435 | 10,471 | 10,471 | 512 | 478,502 | - |
| 51 | 7,539 | 5,780 | 128 | 9,421 | 6,048 | 205 | 19,231 | 9,136 | ∗ 282 | 8,765 | 8,227 | 359 | 21,104 | 11,781 | 436 | 10,758 | 10,758 | 513 | 77,940 | - |
| 52 | 7,170 | 5,291 | 129 | 9,421 | 6,836 | 206 | 22,123 | 11,096 | 283 | 12,277 | 10,745 | 360 | 18,585 | 10,674 | 437 | 11,169 | 11,128 | 514 | 1,238,111 | - |
| 53 | 7,003 | 5,403 | 130 | 9,420 | 7,080 | 207 | 22,407 | 9,761 | 284 | 14,178 | 13,998 | 361 | 18,690 | 9,686 | 438 | 12,466 | 12,363 | 515 | 295,424 | - |
| 54 | 7,000 | 5,555 | 131 | 9,360 | 7,080 | 208 | 17,779 | 7,507 | 285 | 15,535 | 13,199 | 362 | 16,256 | 8,880 | 439 | 13,169 | 13,118 | 516 | 1,285,012 | - |
| 55 | 7,702 | 5,867 | 132 | 12,686 | 8,471 | 209 | 16,332 | 7,646 | 286 | 16,706 | 13,247 | 363 | 14,878 | 8,092 | 440 | 13,309 | 13,304 | 517 | 1,418,949 | - |
| 56 | 9,314 | 6,558 | 133 | 11,395 | 10,055 | ∗ 210 | 16,136 | 7,631 | 287 | 17,244 | 13,374 | 364 | 13,819 | 8,732 | 441 | 13,461 | 12,972 | 518 | 217,243 | - |
| 57 | 10,944 | 8,412 | 134 | 9,314 | 8,421 | ∗ 211 | 16,221 | 7,827 | 288 | 16,885 | 13,335 | 365 | 13,098 | 9,396 | 442 | 18,096 | 10,691 | 519 | 787,540 | - |
| 58 | 10,578 | 6,755 | 135 | 8,232 | 7,436 | 212 | 16,569 | 8,075 | 289 | 16,903 | 13,476 | 366 | 14,537 | 14,076 | 443 | 15,822 | 13,384 | 520 | 877,376 | - |
| 59 | 7,281 | 6,156 | 136 | 7,575 | 7,072 | ∗ 213 | 15,571 | 7,563 | 290 | 15,367 | 13,466 | 367 | 9,922 | 9,921 | 444 | 18,322 | 18,322 | 521 | 275,168 | - |
| 60 | 7,744 | 6,638 | 137 | 7,520 | 7,520 | ∗ 214 | 14,050 | 8,014 | 291 | 19,483 | 15,297 | 368 | 10,736 | 10,134 | 445 | 20,230 | 20,225 | 522 | 613,248 | - |
| 61 | 7,265 | 6,455 | 138 | 7,558 | 7,500 | ∗ 215 | 14,077 | 8,065 | 292 | 20,401 | 15,870 | 369 | 12,066 | 10,564 | 446 | 17,108 | 17,108 | 523 | 27,624 | - |
| 62 | 7,335 | 7,167 | 139 | 7,559 | 7,500 | ∗ 216 | 14,093 | 8,046 | 293 | 18,053 | 12,384 | 370 | 11,815 | 10,621 | 447 | 16,725 | 16,725 | 524 | 54,863 | - |
| 63 | 7,345 | 7,280 | 140 | 7,522 | 7,522 | ∗ 217 | 14,109 | 8,076 | 294 | 19,304 | 13,071 | 371 | 12,072 | 10,835 | 448 | 24,343 | 22,175 | 525 | 57,285 | - |
| 64 | 7,280 | 7,280 | 141 | 7,528 | 7,026 | ∗ 218 | 14,125 | 8,092 | 295 | 18,197 | 13,010 | 372 | 12,033 | 10,790 | 449 | 13,877 | 13,268 | 526 | 147,692 | - |
| 65 | 7,326 | 7,297 | 142 | 7,504 | 7,003 | ∗ 219 | 14,141 | 8,047 | 296 | 17,670 | 12,575 | 373 | 12,007 | 10,774 | 450 | 13,116 | 12,591 | | | |
| 66 | 7,336 | 7,270 | 143 | 7,363 | 6,866 | ∗ 220 | 14,157 | 7,883 | 297 | 17,464 | 12,318 | 374 | 10,554 | 9,665 | 451 | 15,003 | 14,154 | | | |
| 67 | 7,197 | 7,108 | 144 | 7,429 | 6,935 | 221 | 15,483 | 7,503 | 298 | 18,035 | 12,623 | 375 | 10,459 | 9,664 | 452 | 12,644 | 9,753 | | | |
| 68 | 7,204 | 6,637 | 145 | 7,684 | 7,166 | 222 | 17,414 | 7,122 | 299 | 18,883 | 13,399 | 376 | 10,470 | 9,703 | 453 | 9,756 | 9,723 | | | |
| 69 | 7,249 | 6,482 | 146 | 9,216 | 8,659 | 223 | 17,283 | 7,266 | 300 | 19,413 | 13,416 | 377 | 10,472 | 9,691 | 454 | 10,320 | 10,320 | | | |
| 70 | 7,265 | 6,486 | 147 | 8,710 | 7,974 | 224 | 17,253 | 7,159 | 301 | 19,464 | 13,633 | 378 | 10,435 | 9,658 | 455 | 10,126 | 10,126 | | | |
| 71 | 8,113 | 7,069 | 148 | 8,507 | 7,536 | 225 | 16,233 | 6,702 | 302 | 19,050 | 14,014 | 379 | 10,468 | 9,692 | 456 | 10,332 | 9,749 | | | |
| 72 | 7,993 | 6,621 | 149 | 8,221 | 6,817 | 226 | 16,364 | 6,774 | 303 | 18,429 | 14,134 | 380 | 11,621 | 10,158 | 457 | 11,058 | 10,230 | | | |
| 73 | 8,353 | 7,108 | 150 | 8,299 | 6,846 | 227 | 18,523 | 7,302 | 304 | 16,532 | 16,074 | 381 | 12,439 | 10,139 | 458 | 10,392 | 9,587 | | | |
| 74 | 9,529 | 7,954 | 151 | 8,254 | 6,600 | 228 | 12,212 | 7,220 | 305 | 22,262 | 16,633 | 382 | 12,972 | 10,737 | 459 | 10,133 | 9,088 | | | |
| 75 | 14,516 | 9,359 | 152 | 8,138 | 6,160 | 229 | 11,522 | 9,970 | 306 | 17,489 | 15,678 | 383 | 14,219 | 9,749 | 460 | 11,970 | 10,389 | | | |
| 76 | 15,311 | 9,004 | 153 | 8,293 | 6,541 | 230 | 8,630 | 7,443 | 307 | 16,289 | 13,783 | 384 | 17,370 | 12,536 | 461 | 9,656 | 8,377 | | | |
| 77 | 14,844 | 9,141 | 154 | 9,850 | 8,592 | ∗ 231 | 7,142 | 6,710 | 308 | 16,862 | 13,734 | 385 | 15,795 | 13,562 | 462 | 11,621 | 10,325 | | | |

LOTS 1-497 ALL S.F. RESIDENTIAL LOTS

FEE-TITLE LOTS TO LACFCD

WATER TANK LOT

PUBLIC PARK

RECREATIONAL AREA LOTS TO H.O.A.

OPEN SPACE LOTS

## NET LOT AREA TABLE

| LOT NO. | LOT AREA (GROSS SF.) | LOT AREA (NET SF) |
|---|---|---|
| 11 | 8,729 | 7,700 |
| 16 | 11,212 | 10,187 |
| 17 | 10,578 | 9,691 |
| 19 | 12,174 | 10,242 |
| 20 | 12,882 | 10,917 |
| 23 | 12,159 | 11,000 |
| 24 | 8,520 | 8,055 |
| 25 | 11,416 | 10,197 |
| 26 | 11,293 | 10,313 |
| 188 | 11,050 | 9,830 |
| 210 | 16,136 | 15,815 |
| 211 | 16,221 | 14,371 |
| 213 | 15,561 | 14,309 |
| 214 | 14,050 | 9,722 |
| 215 | 14,077 | 13,129 |
| 216 | 14,093 | 12,918 |
| 217 | 14,109 | 12,226 |
| 218 | 14,125 | 8,113 |
| 219 | 14,141 | 13,151 |
| 220 | 14,157 | 13,946 |
| 231 | 7,142 | 6,786 |
| 232 | 8,205 | 2,445 |
| 233 | 9,677 | 6,127 |
| 234 | 10,297 | 9,255 |
| 240 | 7,085 | 5,883 |
| 241 | 7,800 | 7,707 |
| 243 | 26,383 | 25,673 |
| 244 | 13,604 | 12,485 |
| 259 | 16,449 | 16,352 |
| 260 | 16,026 | 11,300 |
| 261 | 20,065 | 7,797 |
| 262 | 20,953 | 15,564 |
| 267 | 9,595 | 8,965 |
| 268 | 14,015 | 6,900 |
| 269 | 11,690 | 6,000 |
| 270 | 10,415 | 9,312 |
| 271 | 9,290 | 4,039 |
| 272 | 13,541 | 9,339 |
| 273 | 14,244 | 5,206 |
| 274 | 11,019 | 4,867 |
| 275 | 10,564 | 4,493 |
| 276 | 13,551 | 6,947 |
| 277 | 12,125 | 7,585 |
| 278 | 10,857 | 6,914 |
| 280 | 7,700 | 4,263 |
| 281 | 8,266 | 5,517 |
| 282 | 8,765 | 8,003 |
| 345 | 22,322 | 21,602 |

## LOT SUMMARY

| DESIGNATION | LOT NO. | NO. OF LOTS | (S.F.) (APPROX.) | (A.C.) (APPROX.) |
|---|---|---|---|---|
| SINGLE FAMILY LOTS | 1-497 | 497 | 6,224,833 | 142.91 |
| STORM DRAIN MAINTENANCE LOTS | 498-504 | 7 | 172,511 | 3.96 |
| WATER TANK | 505 | 1 | 65,421 | 1.50 |
| PUBLIC PARK | 506 | 1 | 848,665 | 19.48 |
| REC. AREA | 507-513 | 7 | 1,922,608 | 44.14 |
| OPEN SPACE | 514-526 | 13 | 7,295,536 | 167.48 |
| HASLEY CANYON ROAD | - | - | 43,560 | 1.0 |
| STREET AREA | - | - | 2,175,090 | 49.93 |
| | | | | |
| TOTAL | | 526 | 18,748,224 | ±430.4 |

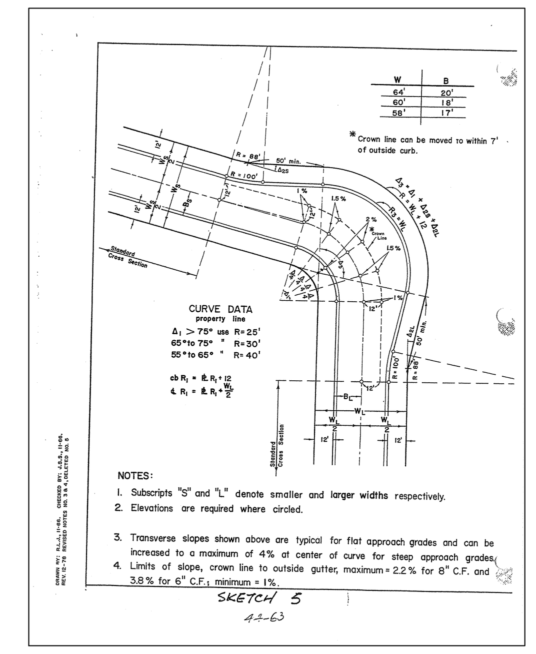

TYPICAL RESIDENTIAL KNUCKLE DETAIL
NOT TO SCALE
PER L.A.C.D.P.W. LAND DEVELOPMENT DIVISION HANDBOOK, VOLUME 5, CHAPTER 44, PAGE 44-63

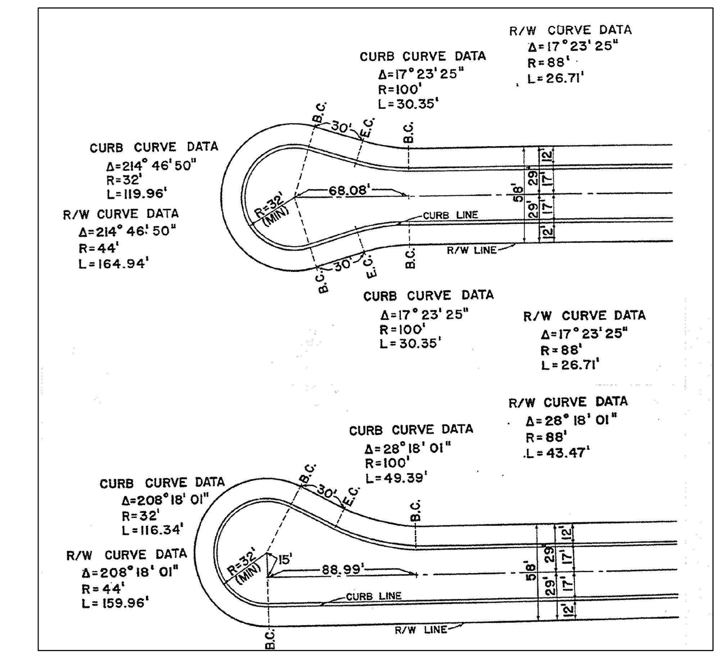

TYPICAL RESIDENTIAL CUL-DE-SAC DETAIL
NOT TO SCALE
PER L.A.C.D.P.W. LAND DEVELOPMENT DIVISION HANDBOOK, VOLUME 5, CHAPTER 44, PAGE 44-38

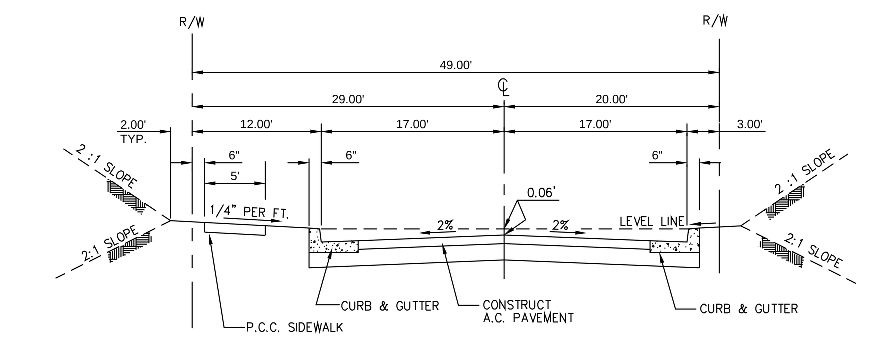

TYPICAL SECTION 49' R/W
BELLEZA WAY
NOT TO SCALE

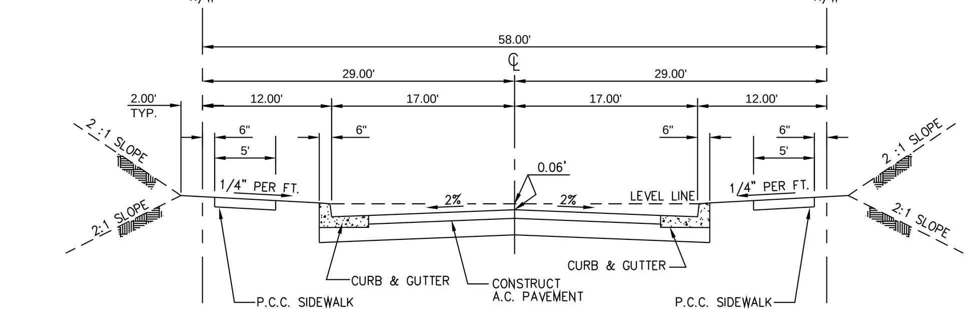

TYPICAL SECTION 58' R/W
STREET "C", "G", "H", "L", "M", "N" & "Q"
BUENA VIDA WAY
NOT TO SCALE

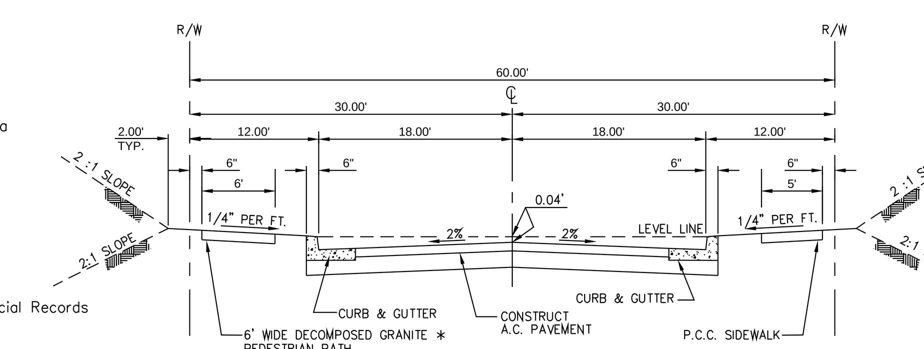

ALTERNATE SECTION 60' R/W
STREET "B"
NOT TO SCALE
∗ LOCATION PER PLAN

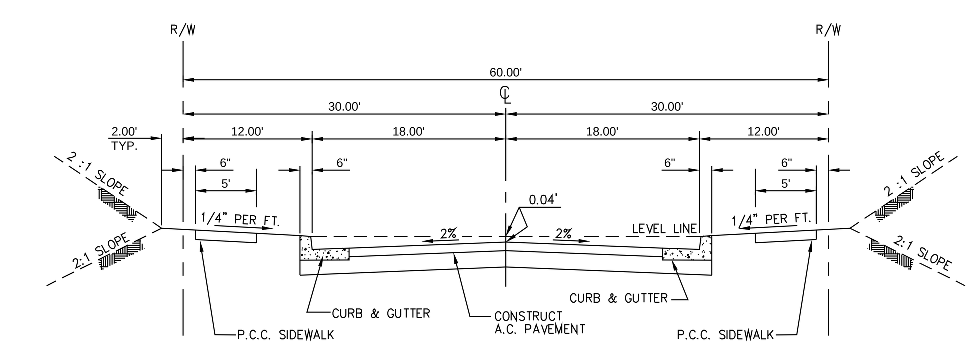

TYPICAL SECTION 60' R/W
STREET "C", "D", "K", "N" & "P"
VISTA GRANDE PLACE & LOS MONTANES DR.
NOT TO SCALE

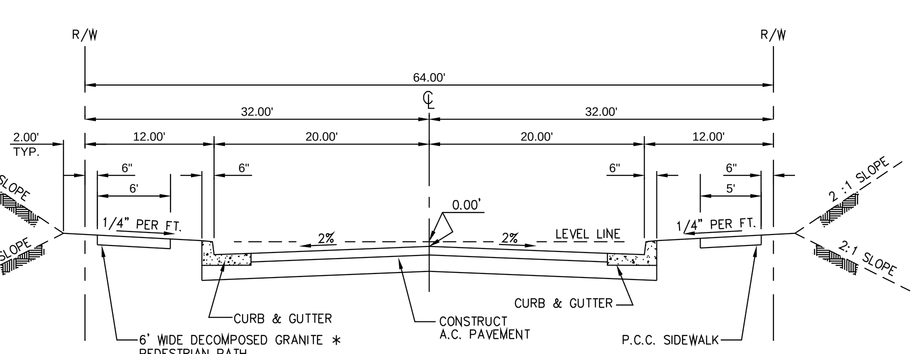

ALTERNATE SECTION 64' R/W
STREET "A"
BARCELONA DR., LOS ALTOS DR.,
NOT TO SCALE
∗ LOCATION PER PLAN

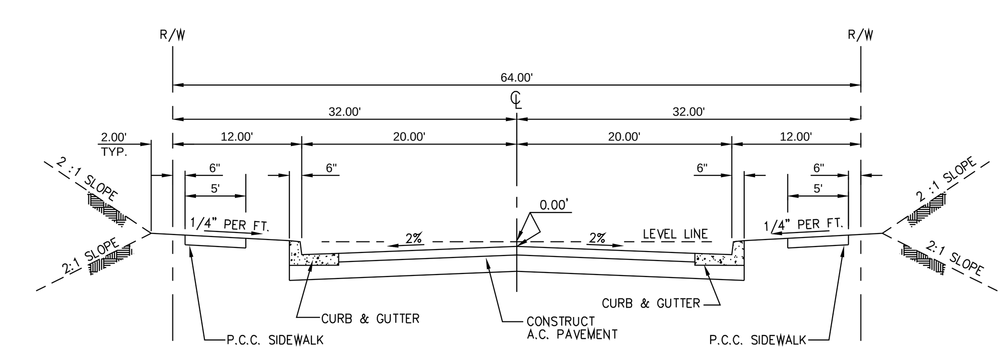

TYPICAL SECTION 64' R/W
STREET "A", "B", "C", "E", "F" & "J"
BARCELONA DR., HAYWARD DR. & LOS ALTOS DR.
NOT TO SCALE

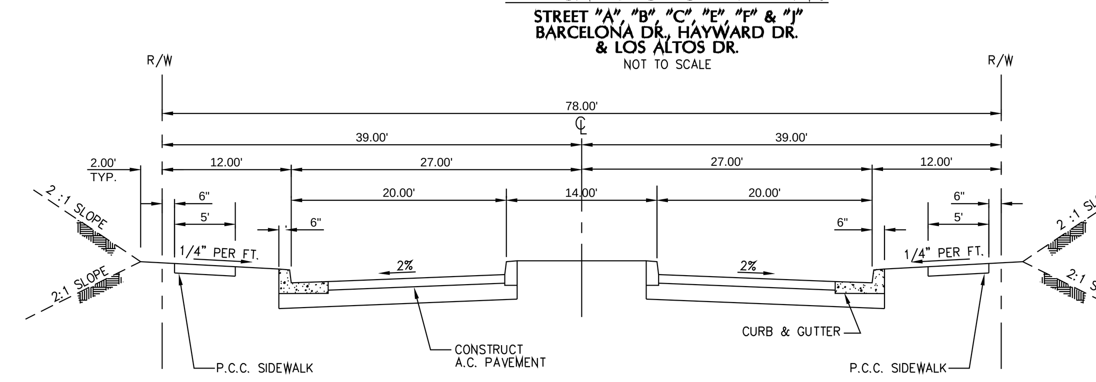

TYPICAL SECTION 78' R/W
LOS VALLES DRIVE
NOT TO SCALE

## EASEMENTS:

1. Easement(s)for the purpose(s) shown below and rights incidental thereto as set forth in a document;
Purpose: Road purposes and incidental purposes
Recorded: Book 5595, Page 332, of Official Records
Affects: That portion of said land more particularly described therein.and recorded: Book 5682, Page 306, of Official Records

2. Easement(s) for the purpose(s) shown below and rights incidental thereto as set forth in a document;
Purpose: Electrical supply systems and communication systems and incidental purposes
Recorded: August 21, 1991, Instrument No. 91-1312408, of Official Records
Affects: That portion of said land more particularly described therein.

3. Castaic Property Holdings, LLC, a California limited liabilty company and its assigns with the right to grant the same to the County of Los Angeles/Los Angeles County Flood Control District, or other appropriate agency forGrading and debris basin and incidental purposes recorded July 17, 2000, Instrument No. 00-1085593, of Official Records

4. Easement(s) for the purpose(s) shown below and rights incidental thereto as set forth in a document;
Purpose: Drainage and incidental purposes
Recorded: October 24, 2000, Instrument No. 00-1663987, of Official Records
Affects: That portion of said land as more particularly described therein.

5. Easement(s)for the purpose(s) shown below and rights incidental thereto as set forth in a document;
Purpose: Flood control purposes and incidental purposes
Recorded: October 24, 2000, Instrument No. 00-1663990, of Official Records
Affects: That portion of said land as more particularly described therein.

6. Easement(s) for the purpose(s) shown below and rights incidental thereto as set forth in a document;
Purpose: Slopes and incidental purposes
Recorded: October 24, 2000, Instrument No. 00-1663991, of Official Records
Affects: That portion of said land as more particularly described therein.

7. Easement(s) for the purpose(s) shown below and rights incidental thereto as set forth in a document;
Purpose: Public road and highway purposes and incidental purposes
Recorded: October 24, 2000, Instrument No. 00-1663986, of Official Records
Affects: That portion of said land as more particularly described therein.

8. Easement(s) for the purpose(s) shown below and rights incidental thereto as delineated or as offered for dedication, on the map of said tract.
Purpose: Flood control purposes as dedicated to the Los Angeles County Flood Control District
Affects: Lots 53, 56 and 58 as shown on the Map of said Tract 52584-01.

9. Easement(s) for the purpose(s) shown below and rights incidental thereto as delineated or as offered for dedication, on the map of said tract.
Purpose: Bridge access purposes as dedicated to the County of Los Angeles
Affects: Lots 56, 57, 58 and 60 as shown on the Map of Tract 52584-01.

10. Easement(s) for the purpose(s) shown below and rights incidental thereto as delineated or as offered for dedication, on the map of said tract.
Purpose: Bridge maintenance purposes as dedicated to the County of Los Angeles
Affects: Lots 56, 57 and 58 as shown on the Map of said Tract 52584-01.

11. Easement(s) for the purpose(s) shown below and rights incidental thereto as delineated or as offered for dedication, on the map of said tract.
Purpose: Sanitary sewer purposes as dedicated to the County of Los Angeles
Affects: Lots 51, 52 and 54 as shown on the Map of said Tract 52584-01.

12. Easement(s) for the purpose(s) shown below and rights incidental thereto as delineated or as offered for dedication, on the map of said tract.
Purpose: Air space visibility purposes as dedicated to the County of Los Angeles
Affects: Lots 43 and 51 as shown on the Map of Tract 52584-01.

13. Easement(s) for the purpose(s) shown below and rights incidental thereto as delineated or as offered for dedication, on the map of said tract.
Purpose: Private driveway and fire lane
Affects: As shown on the Map of Tract 52584-01.

14. Easement(s) for the purpose(s) shown below and rights incidental thereto as delineated or as offered for dedication, on the map of said tract.
Purpose: Covered storm drain purposes as dedicated to the Los Angeles County Flood Control
Affects: Lots 51, 52, 59, 60, 61 and 62 as shown on the Map of Tract 52584-01.

15. Easement(s) for the purpose(s) shown below and rights incidental thereto as delineated or as offered for dedication, on the map of said tract.
Purpose: Water pipelines and appurtenances with ingress and egress as dedicated to the County of Los Angeles
Affects: Lots 51, 52, 53, 59 and 62 as shown on the Map of Tract 52584-01.

16. Easement(s) for the purpose(s) shown below and rights incidental thereto as granted in a document.
Granted to: Pacific Bell Telephone Company, a corporation dba AT&T California
Purpose: Public utilities
Recorded: December 19, 2008, Instrument No. 20082233802, of Official Records

## LEGAL DESCRIPTION:

THE LAND REFERRED TO HEREIN BELOW IS SITUATED IN THE COUNTY OF LOS ANGELES, STATE OF CALIFORNIA, AND IS DESCRIBED AS FOLLOWS:

PARCEL 1: (APN 2866-001-017 & PORTIONS OF 2866-001-096; AND 3247-032-001, 035, & PORTIONS OF 3247-032-051)
PARCEL 1 OF CERTIFICATE OF COMPLIANCE FOR LOT LINE ADJUSTMENT NO. 101,922, IN THE COUNTY OF LOS ANGELES, STATE OF CALIFORNIA, WHICH RECORDED MAY 24, 2002 AS INSTRUMENT NO. 02-1208159 OF OFFICIAL RECORDS.
EXCEPTING THERE FROM THAT PORTION LYING WITHIN TRACT NO. 52584-01, IN THE COUNTY OF LOS ANGELES, STATE OF CALIFORNIA, AS PER MAP FILED IN BOOK 1329, PAGES 53 THROUGH 68, INCLUSIVE, OF MAPS, IN THE OFFICE OF THE COUNTY RECORDER OF SAID COUNTY.
ALSO EXCEPT THEREFROM THAT PORTION LYING WITHIN PARCEL 2 OF CERTIFICATE OF COMPLIANCE FOR LOT LINE ADJUSTMENT NO. 101,922, IN THE COUNTY OF LOS ANGELES, STATE OF CALIFORNIA, WHICH RECORDED MAY 24, 2002 AS INSTRUMENT NO. 02-1208159 OF OFFICIAL RECORDS.
ALSO EXCEPT THEREFROM THAT PORTION LYING WITHIN PARCEL 5 OF CERTIFICATE OF COMPLIANCE FOR LOT LINE ADJUSTMENT NO. 101,923, IN THE COUNTY OF LOS ANGELES, STATE OF CALIFORNIA, WHICH RECORDED AUGUST 17, 2001 AS INSTRUMENT NO. 01-1524850 OF OFFICIAL RECORDS.

PARCEL 2: (APN PORTIONS OF 3247-032-051)
PARCEL 2 OF CERTIFICATE OF COMPLIANCE FOR LOT LINE ADJUSTMENT NO. 101,922, IN THE COUNTY OF LOS ANGELES, STATE OF CALIFORNIA, WHICH RECORDED MAY 24, 2002 AS INSTRUMENT NO. 02-1208159 OF OFFICIAL RECORDS.
EXCEPTING THERE FROM THAT PORTION LYING WITHIN TRACT NO. 52584-01, IN THE COUNTY OF LOS ANGELES, STATE OF CALIFORNIA, AS PER MAP FILED IN BOOK 1329, PAGES 53 THROUGH 68, INCLUSIVE, OF MAPS, IN THE OFFICE OF THE COUNTY RECORDER OF SAID COUNTY.

PARCEL 3: (APN PORTIONS OF 2866-001-096)
PARCEL 5 OF CERTIFICATE OF COMPLIANCE FOR LOT LINE ADJUSTMENT NO. 101,923, [N THE COUNTY OF LOS ANGELES, STATE OF CALIFORNIA, WHICH RECORDED AUGUST 17, 2001 AS INSTRUMENT NO. 01-152850 OF OFFICIAL RECORDS.

EXCEPTING THERE FROM THAT PORTION LYING WITHIN TRACT NO. 52584-01, IN THE COUNTY OF LOS ANGELES, STATE OF CALIFORNIA, AS PER MAP FILED IN BOOK 1329, PAGES 53 THROUGH 68, INCLUSIVE, OF MAPS, IN THE OFFICE OF THE COUNTY RECORDER OF SAID COUNTY.

PARCEL 4: (APN 2866-001-015, 016, & PORTIONS OF 2866-001-096)
LOTS 2 AND 3 AND THE SOUTHWEST QUARTER OF THE NORTHEAST QUARTER OF SECTION 2, TOWNSHIP 4 NORTH, RANGE 17 WEST, SAN BERNARDINO BASE AND MERIDIAN, ACCORDING TO THE OFFICIAL PLAT OF SAID LAND FILED IN THE DISTRICT LAND OFFICE SEPTEMBER 6, 1880.
EXCEPTING THERE FROM THAT PORTION LYING WITHIN TRACT NO. 52584-01, IN THE COUNTY OF LOS ANGELES, STATE OF CALIFORNIA, AS PER MAP FILED IN BOOK 1329, PAGES 53 THROUGH 68, INCLUSIVE, OF MAPS, IN THE OFFICE OF THE COUNTY RECORDER OF SAID COUNTY.

PARCEL 5:
LOTS 1 TO 61, INCLUSIVE, OF TRACT NO. 52584-01, IN THE COUNTY OF LOS ANGELES, STATE OF CALIFORNIA, AS PER MAP FILED IN BOOK 1329, PAGES 53 THROUGH 68, INCLUSIVE, OF MAPS, IN THE OFFICE OF THE COUNTY RECORDER OF SAID COUNTY.

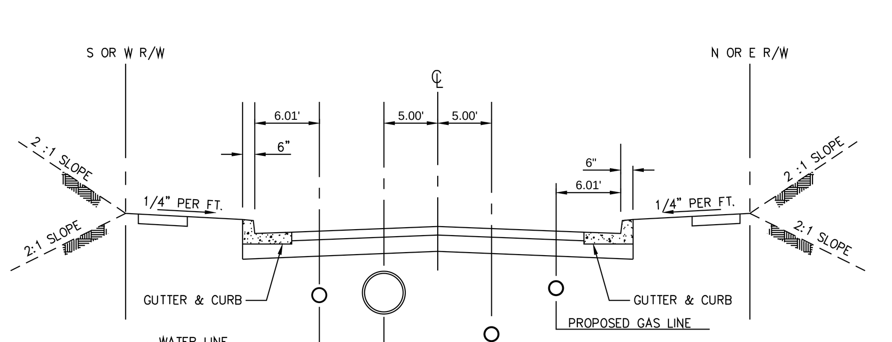

TYPICAL UTILITY LOCATION
NOT TO SCALE
∗ PIPE SIZE AND DEPTH PER ENGINEERING

DRAWN BY LDC.
CHECKED BY C.G.
DESIGNED BY LDC

| DATE CHANGED | CHANGED BY | REVISION |
|---|---|---|

REGISTERED PROFESSIONAL ENGINEER CHARLES A. GILMAN No. 54155 Exp. 12-31-13 CIVIL STATE OF CALIFORNIA

OWNER/DEVELOPER:
SFI LOS VALLES LLC
10960 WILSHIRE BLVD., SUITE 1260 LOS ANGELES, CA 90024
PH.: (310) 315-5566 FAX: (310) 315-7017

LEGAL DESCRIPTION:
SEE LEFT HEREON

# C.U.P. EXHIBIT "A"
# MAJOR LAND DIVISION REVISED
## VESTING TENTATIVE TRACT MAP NO.
# 052584
IN THE UNINCORPORATED TERRITORY OF COUNTY OF LOS ANGELES, STATE OF CALIFORNIA.

PREPARED BY:
LAND DESIGN CONSULTANTS, INC.
Land Planning, Civil Engineering, Surveying & Environmental Services
199 South Los Robles Ave., Suite 250, Pasadena, California 91101
Ph.: (626) 578-7000, Fax: (626) 578-7373
http://www.ldcla.com

Charles A. Gilman, R.C.E. No. C54155 — 06-04-2013 DATE

Project. No. 11018-001
SHEET 2 OF 5

J:\Civil 3D Projects\11018001\50_Sheet Sets\10_Planning\CUP\SHEET 02.dwg Jun 04, 2013 10:14 am MIHALY

DEPT OF REGIONAL PLANNING
TRSZ584 EXHIBIT MAP PG 3
11 JUN 2013

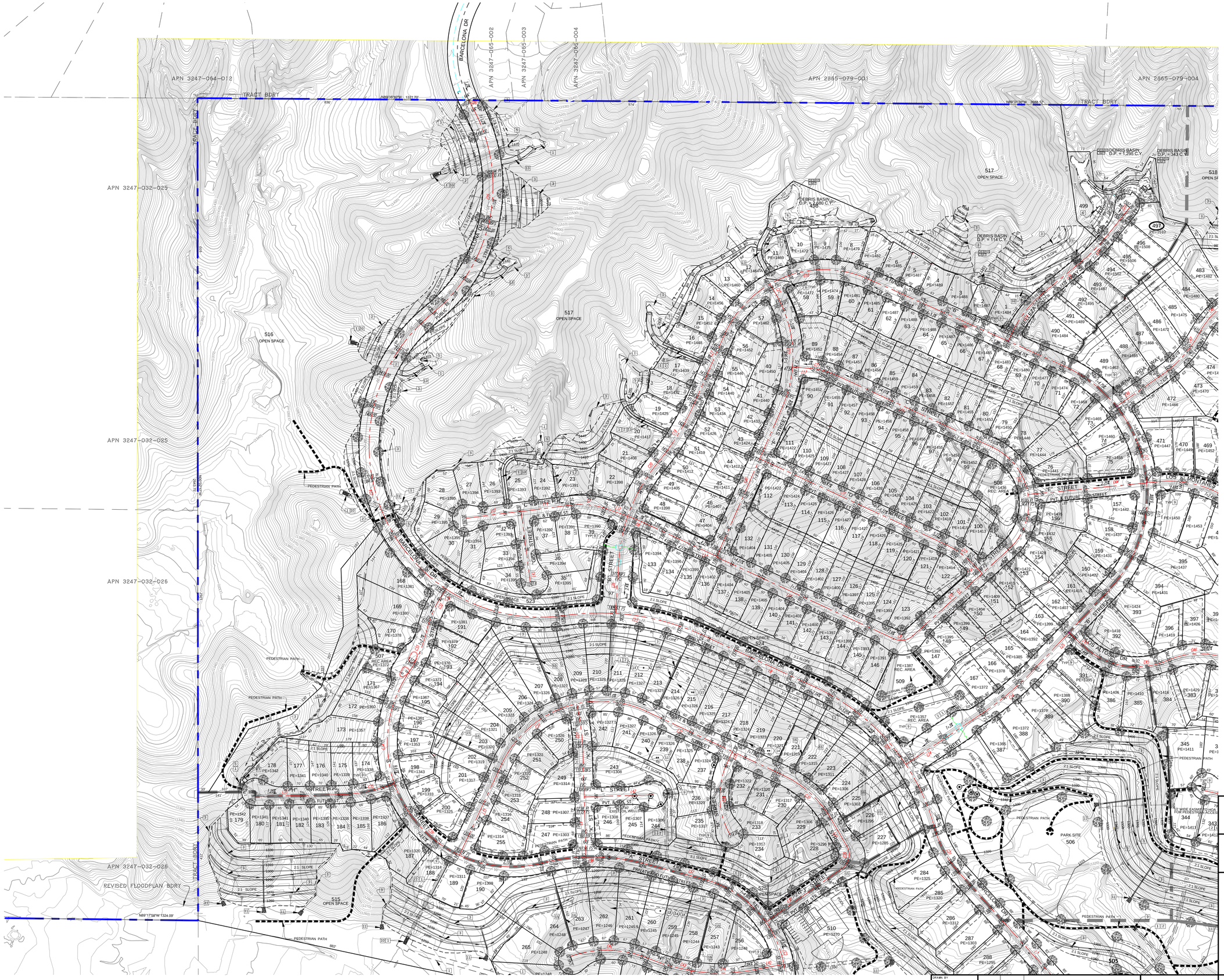


SEE SHEET NO. 4

| Line Table: Alignments | | |
|---|---|---|
| Line # | Length | Direction |
| L1 | 201.23 | S2° 25' 28"W |
| L2 | 309.82 | S25° 53' 30"E |
| L3 | 82.37 | S10° 50' 52"W |
| L4 | 89.79 | S15° 24' 13"E |
| L5 | 151.43 | S77° 17' 25"W |
| L6 | 235.63 | S13° 31' 55"W |
| L7 | 717.23 | N41° 56' 33"W |
| L8 | 385.06 | N65° 13' 24"W |
| L9 | 337.63 | N1° 41' 59"W |
| L10 | 178.15 | N82° 38' 37"E |
| L11 | 161.00 | N82° 38' 37"E |
| L12 | 73.58 | S70° 59' 57"E |
| L13 | 266.49 | S65° 13' 24"E |
| L14 | 626.72 | S65° 13' 24"E |
| L15 | 411.99 | N47° 59' 24"E |
| L16 | 552.12 | N65° 13' 24"W |
| L17 | 57.68 | N85° 16' 10"W |
| L18 | 658.64 | S65° 13' 24"E |
| L19 | 28.91 | S42° 00' 36"E |
| L20 | 527.00 | N23° 41' 47"E |
| L21 | 41.61 | N29° 43' 56"W |
| L22 | 159.36 | N50° 31' 55"E |
| L23 | 110.82 | N38° 43' 09"E |
| L24 | 289.72 | N56° 19' 12"E |
| L25 | 348.88 | N43° 18' 31"E |
| L26 | 688.40 | N68° 01' 20"W |
| L27 | 242.96 | S23° 41' 47"W |
| L28 | 168.66 | S7° 35' 33"W |
| L29 | 41.30 | S25° 01' 52"W |
| L30 | 298.60 | N54° 51' 18"E |
| L31 | 100.06 | N30° 09' 11"W |
| L32 | 484.69 | N64° 56' 08"W |
| L33 | 322.63 | S24° 57' 46"W |
| L34 | 25.48 | N33° 21' 21"E |
| L35 | 270.03 | N88° 46' 12"E |
| L37 | 203.55 | N75° 19' 29"W |
| L40 | 93.60 | N79° 06' 53"E |
| L42 | 223.43 | N88° 18' 01"E |
| L43 | 229.24 | S7° 21' 23"E |
| L44 | 383.47 | N84° 23' 13"E |
| L45 | 62.58 | S46° 41' 29"E |
| L46 | 181.83 | N55° 08' 08"E |
| L47 | 177.26 | N73° 29' 03"E |

| Curve Table: Alignments | | |
|---|---|---|
| Curve # | Radius | Length |
| C1 | 350.00 | 179.08 |
| C2 | 360.00 | 230.84 |
| C3 | 350.00 | 160.36 |
| C4 | 400.00 | 647.13 |
| C5 | 450.00 | 500.76 |
| C6 | 610.00 | 1325.76 |
| C7 | 250.00 | 115.00 |
| C8 | 475.00 | 47.73 |
| C9 | 57.00 | 66.44 |
| C10 | 200.00 | 395.19 |
| C11 | 250.00 | 87.47 |
| C12 | 300.00 | 121.54 |
| C13 | 400.00 | 373.00 |
| C14 | 370.23 | 192.17 |
| C15 | 600.00 | 123.70 |
| C16 | 1000.00 | 227.09 |
| C17 | 450.00 | 858.68 |
| C18 | 350.00 | 551.50 |
| C19 | 800.00 | 222.71 |
| C20 | 550.00 | 346.10 |
| C21 | 350.00 | 163.38 |
| C22 | 700.00 | 611.18 |
| C23 | 800.00 | 460.03 |
| C24 | 550.00 | 1431.72 |
| C25 | 525.00 | 738.75 |
| C26 | 350.00 | 19.90 |
| C27 | 800.00 | 156.32 |
| C28 | 250.00 | 237.03 |
| C29 | 55.00 | 81.60 |
| C30 | 350.00 | 212.67 |
| C31 | 350.00 | 550.70 |
| C32 | 350.00 | 124.97 |
| C33 | 400.00 | 148.87 |
| C34 | 400.00 | 964.49 |
| C35 | 500.00 | 180.74 |
| C37 | 350.00 | 531.93 |
| C38 | 650.00 | 327.77 |
| C39 | 400.00 | 964.49 |
| C42 | 351.00 | 257.09 |
| C43 | 599.00 | 142.76 |
| C44 | 600.00 | 206.68 |
| C45 | 250.00 | 292.81 |
| C46 | 250.00 | 176.10 |
| C47 | 375.00 | 176.69 |
| C48 | 275.00 | 217.64 |

GRAPHIC SCALE
(IN FEET)
100 50 0 100 200 300

OWNER/DEVELOPER:

SFI LOS VALLES LLC
10960 WILSHIRE BLVD., SUITE 1260 LOS ANGELES, CA 90024
PH: (310) 315-5566 FAX: (310) 315-7017

LEGAL DESCRIPTION:

SEE SHEET NO. 2

# C.U.P. EXHIBIT "A"
# MAJOR LAND DIVISION REVISED
## VESTING TENTATIVE TRACT MAP NO.
# 052584

IN THE UNINCORPORATED TERRITORY OF COUNTY OF LOS ANGELES, STATE OF CALIFORNIA

DRAWN BY: LDC.
CHECKED BY: C.C.
DESIGNED BY: LDC

| DATE CHANGED | CHANGED BY | REVISION |
|---|---|---|

REGISTERED PROFESSIONAL ENGINEER
CHARLES A. GILMAN
No. 54155
Exp. 12-31-13
CIVIL
STATE OF CALIFORNIA

PREPARED BY:


LAND DESIGN CONSULTANTS, INC.
Land Planning, Civil Engineering, Surveying & Environmental Services
199 South Los Robles Ave., Suite 250, Pasadena, California 91101
Ph.: (626) 578-7000, Fax: (626) 578-7373
http://www.ldcla.com
Charles A. Gilman, R.C.E. No. C54155


06-04-2013
DATE

LDC

Project. No. 11018-001

SHEET 3 OF 5

J:\Civil_3D\Projects\11018001\05-Sheet Sets\10-Drawings\CUP\SHEET 03.dwg Jun 04, 2013 10:18 am MHALY

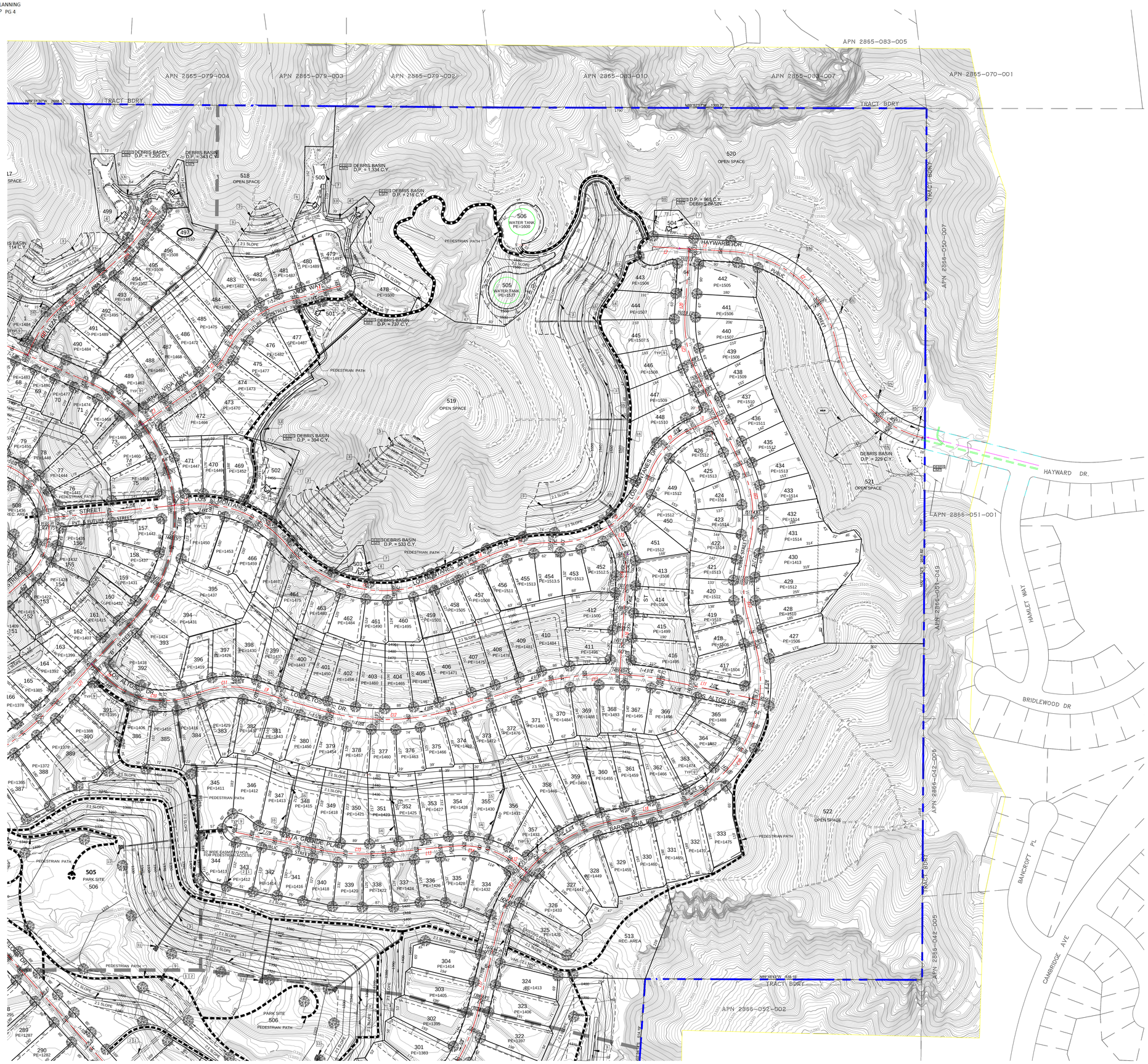


| Line Table: Alignments | | |
|---|---|---|
| Line # | Length | Direction |
| L1 | 153.68 | N88° 34' 34"W |
| L2 | 81.61 | N88° 34' 34"W |
| L3 | 181.83 | N55° 08' 08"E |
| L4 | 177.26 | N17° 29' 03"E |
| L5 | 43.96 | N85° 22' 26"E |
| L6 | 184.30 | N66° 20' 15"E |
| L7 | 90.00 | N64° 06' 30"E |
| L8 | 62.58 | S46° 41' 29"E |
| L9 | 208.98 | S13° 26' 22"E |
| L10 | 209.14 | N17° 24' 48"E |
| L11 | 280.06 | S17° 58' 22"E |
| L12 | 31.27 | N50° 39' 57"W |
| L13 | 205.14 | S84° 19' 19"W |
| L14 | 246.17 | N78° 08' 00"W |
| L15 | 33.32 | S33° 29' 17"E |
| L16 | 297.19 | S3° 48' 12"W |
| L17 | 235.63 | S13° 31' 55"W |
| L18 | 151.43 | S73° 17' 25"W |
| L19 | 309.82 | S25° 53' 30"E |
| L20 | 201.23 | S3° 25' 26"W |
| L21 | 348.88 | N4° 18' 31"E |
| L22 | 159.36 | N50° 31' 55"E |
| L23 | 110.82 | N38° 43' 09"E |

| Curve Table: Alignments | | |
|---|---|---|
| Curve # | Radius | Length |
| C1 | 350.00 | 400.44 |
| C2 | 350.00 | 466.39 |
| C3 | 375.00 | 176.69 |
| C4 | 275.00 | 217.64 |
| C5 | 350.00 | 335.37 |
| C6 | 380.00 | 490.37 |
| C7 | 475.00 | 201.58 |
| C8 | 300.00 | 373.78 |
| C9 | 250.00 | 195.66 |
| C10 | 250.00 | 292.81 |
| C11 | 250.00 | 176.10 |
| C12 | 700.00 | 417.19 |
| C13 | 875.00 | 452.25 |
| C14 | 270.00 | 212.12 |
| C15 | 700.00 | 214.35 |
| C16 | 200.00 | 130.17 |
| C17 | 450.00 | 500.78 |
| C18 | 400.00 | 647.13 |
| C19 | 350.00 | 160.36 |
| C20 | 360.00 | 230.84 |
| C21 | 350.00 | 179.08 |
| C22 | 450.00 | 859.68 |
| C23 | 370.21 | 192.17 |
| C24 | 600.00 | 123.70 |

GRAPHIC SCALE
(IN FEET)
100 50 0 100 200 300

OWNER/DEVELOPER:

SFI LOS VALLES LLC

10960 WILSHIRE BLVD., SUITE 1260 LOS ANGELES, CA 90024
PH: (310) 315-5566 FAX: (310) 315-7017

LEGAL DESCRIPTION:

SEE SHEET NO. 2

# C.U.P. EXHIBIT "A"

## MAJOR LAND DIVISION REVISED

VESTING TENTATIVE TRACT MAP NO.

# 052584

IN THE UNINCORPORATED TERRITORY OF COUNTY OF LOS ANGELES, STATE OF CALIFORNIA

DRAWN BY: LDC.
CHECKED BY: C.G.
DESIGNED BY: LDC

| DATE CHANGED | CHANGED BY | REVISION |
|---|---|---|

REGISTERED PROFESSIONAL ENGINEER CHARLES A. GILMAN No. 54155 Exp. 12-31-13 CIVIL STATE OF CALIFORNIA

PREPARED BY:

LAND DESIGN CONSULTANTS, INC.
*Land Planning, Civil Engineering, Surveying & Environmental Services*
199 South Los Robles Ave., Suite 250, Pasadena, California 91101
Ph.: (626) 578-7000, Fax: (626) 578-7373
http://www.ldcla.com

Charles A. Gilman, R.C.E. No. C54155 — 06-04-2013 DATE

LDC

Project. No. 11018-001

SHEET 4 OF 5

SEE SHEET NO. 3

SEE SHEET NO. 4

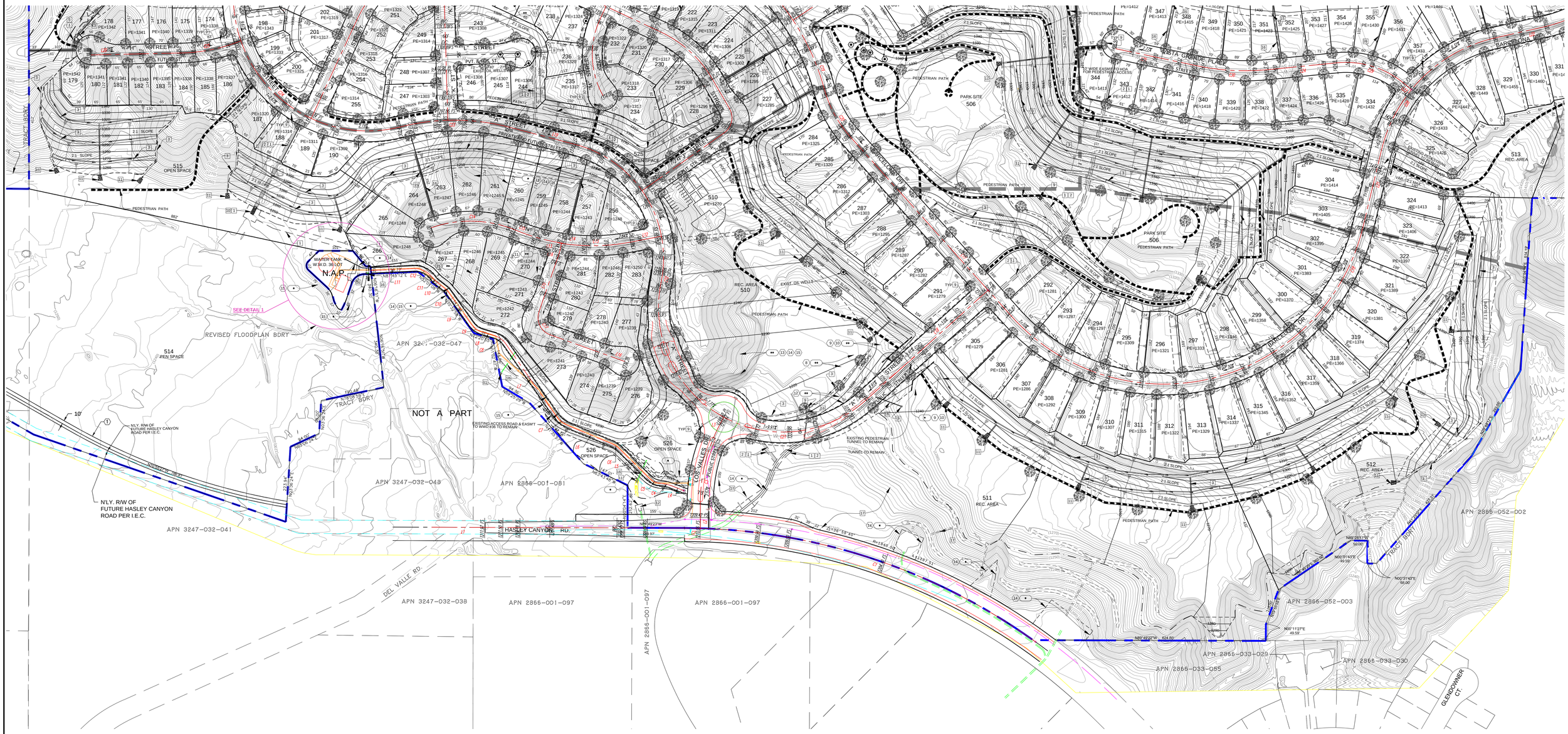


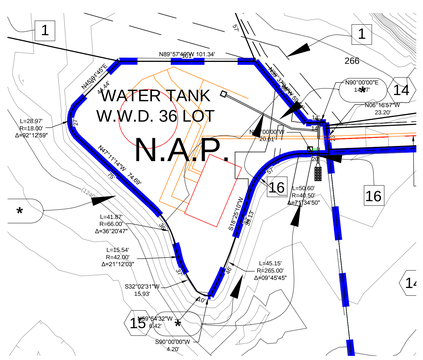


LEGAL DESCRIPTION:
LOT 63 OF TRACT NO. 52584-01, AS RECORDED IN BOOK 1329, PG. 53 THROUGH 68 INCLUSIVE OF MAPS.

## DETAIL 1

SCALE: 1" = 40'

GRAPHIC SCALE
(IN FEET)
100 50 0 100 200 300

| Line Table: Alignments | | |
|---|---|---|
| Line # | Length | Direction |
| L1 | 752.76 | N89° 48' 34"W |
| L2 | 74.83 | N0° 00' 00"E |
| L3 | 21.14 | N28° 19' 04"E |
| L4 | 39.70 | N68° 37' 27"W |
| L5 | 121.56 | N45° 20' 18"W |
| L6 | 136.45 | N67° 30' 04"W |
| L7 | 256.27 | N34° 53' 11"W |
| L8 | 34.90 | N72° 52' 47"W |
| L9 | 115.43 | N35° 30' 30"W |
| L10 | 28.93 | N51° 42' 23"W |
| L11 | 128.04 | S87° 29' 13"W |
| L12 | 93.60 | N79° 06' 53"E |
| L13 | 10.00 | S81° 08' 56"E |
| L14 | 5.00 | S81° 08' 54"E |
| L15 | 178.38 | S19° 04' 41"W |
| L16 | 235.52 | S70° 21' 39"E |
| L17 | 717.23 | N41° 56' 33"W |
| L18 | 489.45 | S48° 03' 27"W |
| L19 | 203.55 | N75° 19' 29"W |
| L20 | 270.03 | N88° 46' 12"E |
| L21 | 235.63 | S13° 31' 55"W |
| L22 | 151.43 | S77° 17' 25"W |
| L23 | 31.27 | N50° 39' 57"W |
| L24 | 205.14 | S84° 19' 19"W |
| L25 | 246.17 | N18° 08' 00"W |

| Curve Table: Alignments | | |
|---|---|---|
| Curve # | Radius | Length |
| C1 | 1800.00 | 1069.16 |
| C2 | 1800.00 | 47.00 |
| C3 | 500.00 | 247.12 |
| C4 | 100.00 | 29.44 |
| C5 | 65.00 | 43.55 |
| C6 | 65.00 | 25.14 |
| C7 | 100.00 | 56.92 |
| C8 | 65.00 | 44.23 |
| C9 | 65.00 | 43.53 |
| C10 | 65.00 | 18.38 |
| C11 | 65.00 | 18.56 |
| C12 | 65.00 | 64.85 |
| C13 | 600.00 | 206.68 |
| C14 | 351.00 | 257.09 |
| C15 | 599.00 | 142.76 |
| C16 | 200.00 | 36.99 |
| C17 | 54.00 | 84.29 |
| C18 | 610.00 | 1,025.76 |
| C19 | 700.00 | 611.18 |
| C20 | 350.00 | 163.38 |
| C21 | 370.00 | 927.95 |
| C22 | 350.00 | 531.93 |
| C23 | 650.00 | 327.77 |
| C24 | 400.00 | 984.49 |
| C25 | 500.00 | 180.74 |
| C28 | 450.00 | 500.76 |
| C29 | 270.00 | 212.12 |
| C30 | 700.00 | 214.35 |

OWNER/DEVELOPER:

SFI LOS VALLES LLC
10960 WILSHIRE BLVD, SUITE 1260 LOS ANGELES, CA 90024
PH: (310) 315-5566 FAX: (310) 315-7017

LEGAL DESCRIPTION:

SEE SHEET NO. 2

# C.U.P. EXHIBIT "A"

# MAJOR LAND DIVISION REVISED

## VESTING TENTATIVE TRACT MAP NO.

# 052584

IN THE UNINCORPORATED TERRITORY OF COUNTY OF LOS ANGELES, STATE OF CALIFORNIA

| | | | |
|---|---|---|---|
| DRAWN BY LDC. | | | |
| CHECKED BY C.G. | | | |
| DESIGNED BY LDC | | | |
| | DATE CHANGED | CHANGED BY | REVISION |

REGISTERED PROFESSIONAL ENGINEER CHARLES A. GILMAN No. 54155 Exp. 12-31-13 CIVIL STATE OF CALIFORNIA

PREPARED BY:

LAND DESIGN CONSULTANTS, INC.
Land Planning, Civil Engineering, Surveying & Environmental Services
199 South Los Robles Ave., Suite 250, Pasadena, California 91101
Ph.: (626) 578-7000, Fax: (626) 578-7373
http://www.ldcla.com

Charles A. Gilman, R.C.E. No. C54155 — 06-04-2013 DATE

LDC

Project. No. 11018-001

SHEET 5 OF 5