RECEIVED
DEPT OF REGIONAL PLANNING
TR52584 EXHIBIT PG 1
DATE: 09 DEC 2015

C.U.P. EXHIBIT "A"
VESTING TENTATIVE TRACT MAP No. 052584

LOCATED IN THE UNINCORPORATED TERRITORY OF
THE COUNTY OF LOS ANGELES, STATE OF CALIFORNIA

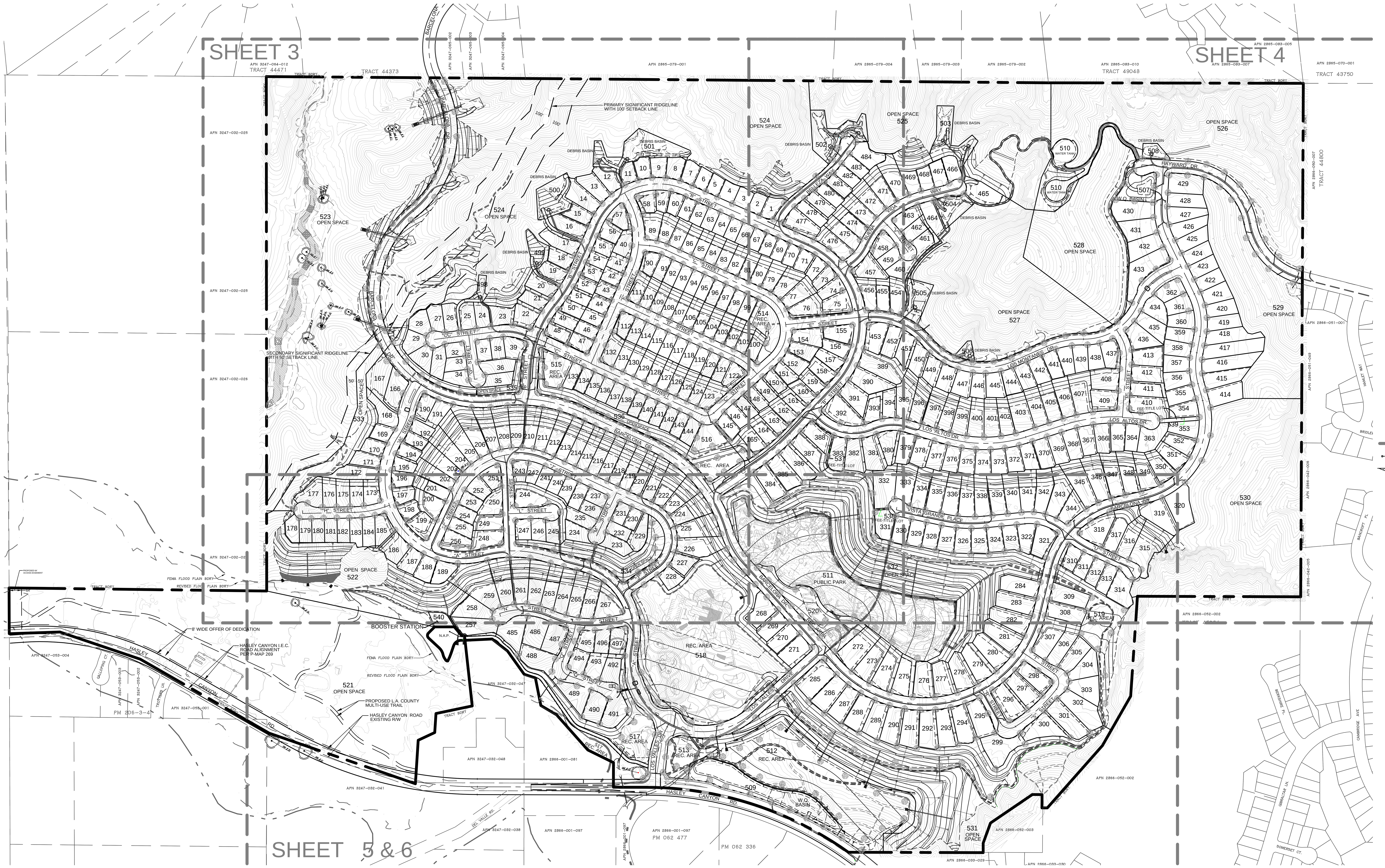

INDEX MAP
SCALE : 1"=200'

LEGEND

– PROPOSED L.A. COUNTY MULTI-USE TRAIL EASEMENT

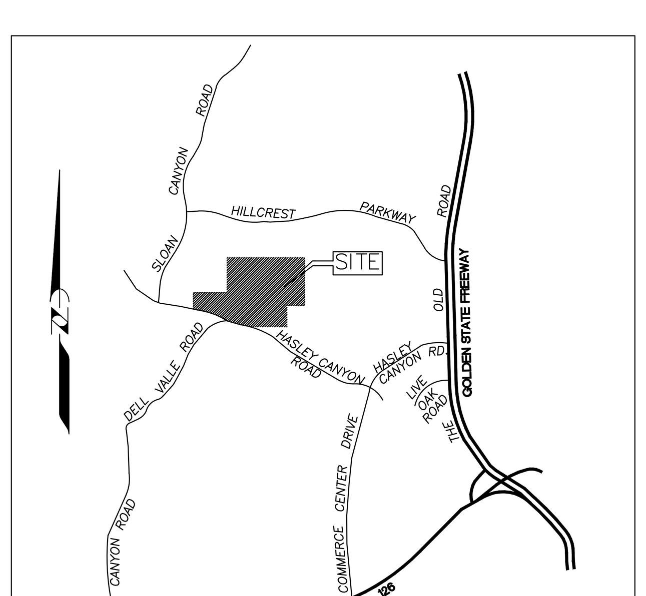

VICINITY MAP
NOT TO SCALE
TG. Pg. 4459, Grid E,4

NOTES

1 – STORM DRAIN EASEMENT TO BE DEDICATED TO L.A.C.F.C.D.
2 – PROPOSED STORM DRAIN LINE
3 – CONCRETE SWALE/DOWNDRAIN TO BE MAINTAINED BY H.O.A.
5 – BULK FLOW INLET STRUCTURE TO BE MAINTAINED BY L.A.C.F.C.D.
6 – DESILTING INLET STRUCTURE TO BE MAINTAINED BY L.A.C.F.C.D.
7 – PROPOSED FEE-TITLE LOT TO LACFCD
8 – CONCRETE TERRACE DRAIN TO BE MAINTAINED BY H.O.A.
9 – CATCH BASIN WITH FILTER INSERT TO BE MAINTAINED BY H.O.A.
10 – OUTLET STRUCTURE / RIP-RAP PAD TO BE MAINTAINED BY H.O.A.
11 – RIP-RAP PAD
12 – EXISTING LACFCD EASEMENT
13 – 15' WIDE ACCESS ROAD TO BE DEDICATED TO L.A.C.F.C.D.
14 – MINI DEBRIS BASIN WITH STAND PIPE TO BE MAINTAINED BY H.O.A.
15 – DOWN DRAIN INLET TO BE MAINTAINED BY H.O.A.
16 – PROPOSED PRIVATE STORM DRAIN LINE
17 – PROPOSED INFILTRATION BASIN TO BE MAINTAINED BY L.A.C.F.C.D.
18 – EXISTING OIL WELLS TO BE ABANDONED PRIOR TO GRADING APPROVAL
19 – EXISTING TERRACE DRAIN PER APPROVED GRADING PLAN # 04-0802-0002 TO BE MAINTAINED BY H.O.A.
20 – EXISTING CONCRETE SWALE PER APPROVED GRADING PLAN # 04-0802-0002 TO BE MAINTAINED BY H.O.A.
21 – PERFORATED RISER OVER-FLOW PIPE
22 – PEDESTRIAN TUNNEL TO BE MAINTAINED BY H.O.A.
23 – PROPOSED PRE-TREATMENT BASIN TO BE MAINTAINED BY L.A.C.F.C.D.
24 – OUTLET STRUCTURE / RIP-RAP PAD TO BE MAINTAINED BY L.A.C.F.C.D.
25 – 10' WIDE SEWER EASEMENT TO BE DEDICATED TO THE COUNTY OF LOS ANGELES
26 – 10' WIDE WATER EASEMENT TO BE DEDICATED TO THE COUNTY OF LOS ANGELES
27 – 20' WIDE ACCESS EASEMENT

TYPICAL BUILDING ELEVATIONS
Not To Scale
(BUILDINGS ARE CONCEPTUAL ONLY)

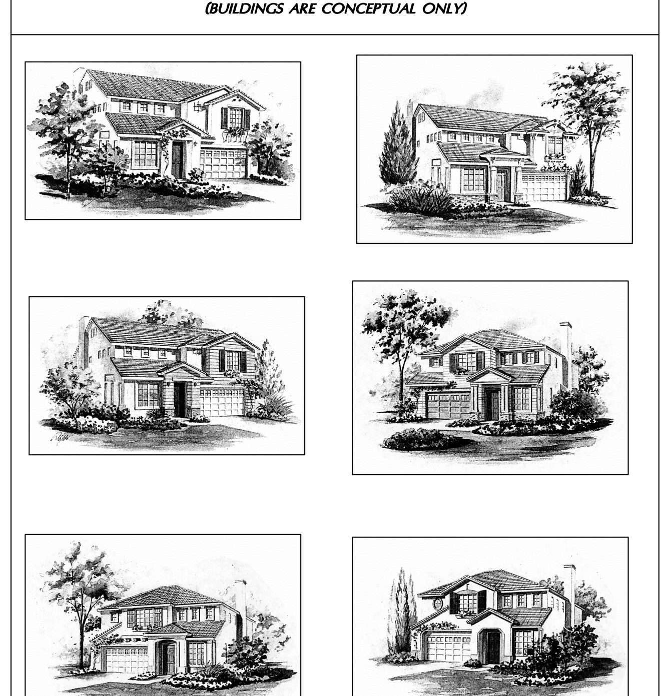

SINGLE TWO-STORY RESIDENTIAL

NOTES:

TREES SHOWN ARE CONCEPTUAL ONLY AND THE TYPES AND NUMBERS WILL BE DETERMINED AT A LATER DATE

PLANT MATERIAL LIST
(Plant material provided shall be selected from this list)

TREES:
(Street tree type & Location is Subject to Park & Recreation Department approval)

Fraxinus velutina "Modesto"
Lagerstroemia indica "Rose"
Pinus halepensis
Eucalyptus rudis
Robinia "Idaho"
Albizia julibrissia
Cinnamomum camphora
Prunus caroliniana
Koelreuteria henryi
Pistacia chinensis
Pyrus kawakamii
Liquidambar straciflua

SHRUBS:
Photinia fraseri
Agapanthus "Peter Pan"
Callistemon cirtinus
Elaegnus pungens
Hemerocallis - Yellow
Ilex Cornuta "Dazzler"
Mahonia quifolium
Morea irisioides
Nandina domestica
Nerium oleander
Osmanthus fragrans
Pittosporum tobria variegata
Raphiloephis indica "Jack Evans"
Ternstroemia japonica
Trachelospermum jasminoides

GROUNDCOVER:
Baccharis pilularia "Twin Peaks"
Hedera helix "Needle Point Ivy"
Turf seed

VINES:
Cyltostoma callistegioides
Doxantha uguis-cati
Parthenocissus tricuspidata

LEGEND:

BVC – BEGINNING OF VERTICAL CURVE
C.B. – CATCH BASIN
℄ – CENTER LINE
DRWY – DRIVEWAY
EL/ELEV – ELEVATION
EVC – END OF VERTICAL CURVE
EX./EXIST. – EXISTING
FL – FLOW LINE
FS – FINISH SURFACE
GB – GRADE BREAK
HP – HIGH POINT
MIN. – MINIMUM
MH – MANHOLE
O.S. – OPEN SPACE
PE – PAD ELEVATION
PI – POINT OF INTERSECTION
PVT – PRIVATE
SSR – SANITARY SEWER MAIN RADIUS
W.Q. – WATER QUALITY
PL – PROPERTY LINE
STD. – STANDARD
TW – TOP OF WALL
→ – DIRECTION OF FLOW
E.F.H. – EX. FIRE HYDRANT
– TRACT BOUNDARY
1390 – PROPOSED CONTOURS
(1400) – EXISTING CONTOURS
– STREET & DRIVEWAY CENTERLINE
C F – CUT AND FILL LINE
– DAYLIGHT LINE
– SUBDRAIN
2:1 – PROPOSED SLOPE AS INDICATED
– PROP. CONC. WALL
– PROP. PEDESTRIAN PATH (LOCATION PER PLAN)
PP – POWER POLE
– TREE
10 – LOT #
– EX. STREET LIGHT
OAK TREE # 5' – OAK TREE WITH 5' PROTECTED ZONE
– OAK TREE TO REMAIN (#1-#17 & #19)
– OAK TREE TO BE REMOVED (#18)
– OAK TREE TO BE ENCROACHED (#22)
S – PROPOSED SEWER LINE
W – PROPOSED WATER LINE
* – EASEMENT TO REMAIN
** – EASEMENT TO BE ABANDONED AND QUITCLAIMED (PRIOR TO RECORDATION OF FINAL MAP)
*** – EASEMENT TO BE REMOVED
– EXISTING OIL WELL LOCATION
– MATCH LINE
– LINE OF SIGHT
– SIGHT DISTANCE EASEMENT
– EXISTING EASEMENT # AS DESCRIBED ON SHEET 7

PROPERTY APN
2866-062-032, -033
3247-032-052

PHASE I EARTHWORK QUANTITIES

	CUT (C.Y.)	FILL (C.Y.)
BULK GRADING 4,065,818 C.Y.@ 12%=3,577,920	3,577,920	3,541,920
REMOVE & RECOMPACT 300,000 C.Y. @ 12%= 264,000	264,000	300,000
TOTAL	**3,841,920**	**3,841,920**

PHASE 2 EARTHWORK QUANTITIES

	CUT (C.Y.)	FILL (C.Y.)
BULK GRADING	115,,000	115,000
TOTAL	**115,000**	**115,000**

GENERAL NOTES:

1. AREA........±430.4 ACRES
2. EXISTING ZONING........A-2-2
3. PROPOSED ZONING........A-2-2
4. EXISTING SITE USE........VACANT, ABANDONED GOLF COURSE
5. DEVELOPMENT TYPE........RESIDENTIAL
6. TOTAL NUMBER OF SINGLE FAMILY LOTS........497
7. MINIMUM RESIDENTIAL LOT SIZE........7,000 SQ. FT.
8. DEVELOPMENT IS LOCATED IN FIRE ZONE 4.
9. STREET, PRIVATE AND FUTURE STREET, PRIVATE DRIVEWAY AND FIRE LANE GRADES MIN. 1%, MAX. 12% ON HAYWARD DRIVE.
10. TOPOGRAPHY IS BASED ON CONTROLLED TOPO W/ CONTOUR INTERVALS 2 FEET.
11. PUBLIC STREETS LOS VALLES DR., BARCELONA DR., VISTA GRANDE PL., HAYWARD DR. "R", "S", "T" & "U" STREETS ARE OFFERED FOR DEDICATION
12. RESIDENTIAL STREETS "A", "B", "CC", "E", "G", "H", "N", "P", "Q" AND "V" LOS MONTANES DR., LOS ALTOS DR., BUENA VIDA WAY & BELLEZA WAY TO BE DESIGNATED AS "PRIVATE AND FUTURE STREETS". SUBDIVIDER RESERVES THE RIGHT TO CONSTRUCT GATES AND MEDIANS.
13. PERMISSION IS REQUESTED TO REDUCE THE PARKWAY WIDTH FROM 12 FEET TO 3 FEET ON ONE SIDE ON THE INTERIOR SINGLE LOADED CUL-DE-SAC STREET ON BELLEZA WAY TO THE SATISFACTION OF PUBLIC WORKS.
14. ALL SLOPES OVER 5 FEET IN HEIGHT ARE TO BE LANDSCAPED AND IRRIGATED WITH THE COUNTY APPROVED PLANTS AND GROUND COVER.
15. THE RIGHT IS RESERVED TO ADJUST LOT LINES AND MERGE LOTS ON THE FINAL MAP.
16. EXISTING AND PROPOSED COUNTYWIDE GENERAL PLAN........URBAN
17. EXISTING SANTA CLARITA VALLEY AREAWIDE LOCAL PLAN (OVOV)........H2
18. GROSS DENSITY........0.80 DU/AC
19. OAK TREES EXISTING WITHIN PROJECT BOUNDARY ARE SUBJECT TO A LOS ANGELES COUNTY OAK TREE PERMIT. OAK TREE #18 IS TO BE REMOVED
20. BOUNDARY LINE DIMENSIONS ARE TAKEN FROM RECORD DATA LOT AREAS SHOWN IN TABLE HEREON ARE GROSS ACREAGE.
21. A 16-FOOT-WIDE MULTI-USE (HIKING, MOUNTAIN BIKING AND EQUESTRIAN) TRAIL EASEMENT IS TO BE DEDICATED TO THE COUNTY OF LOS ANGELES FOR THE PURPOSES OF THE HASLEY CANYON TRAIL
22. SUBDIVIDER RESERVES THE RIGHT TO FILE MULTIPLE FINAL MAPS PER SECTION 66456.1 OF THE STATE MAP ACT.
23. NUMBER AND TYPE OF LOTS PROPOSED:

497	SINGLE FAMILY LOTS
12	STORM DRAIN MAINTENANCE LOTS
1	WATER TANK LOT
1	PARK LOTS
9	REC. LOTS TO H.O.A.
16	OPEN SPACE LOTS
3	FEE-TITLE LOTS
1	BOOSTER STATION
540	

24. PROPERTY LINE RETURN RADII TO BE 13 FT. AT ALL LOCAL STREET INTERSECTIONS, INCLUDING INTERSECTION OF LOCAL STREETS WITH PLANNED HIGHWAYS (THOSE ON THE COUNTY HIGHWAY PLAN), AND 27 FT. WHERE ALL PLANNED HIGHWAYS INTERSECT. (35' @ BELEZZA WAY)
25. TOP & TOE OF SLOPES ARE SUBJECT TO CHANGE IN FINAL ENGINEERING. FINAL ENGINEERING TO SATISFACTION OF DPW AND/OR DRP
26. A LANDSCAPE MAINTENANCE DISTRICT OR H.O.A. WILL BE ESTABLISHED FOR MAINTENANCE OF PRIVATE & FUTURE STREETS, OPEN SPACE SLOPES AND COMMON SLOPES OVER 5 FEET IN HEIGHT.
27. PERMISSION IS REQUESTED TO ABANDON ALL OF THE COUNTY EASEMENTS FOR DRAINAGE PURPOSES BY THE FINAL MAP PURSUANT TO SECTION 66499.20 OF THE STATE GOVERNMENT CODE (IF ANY).
28. TOTAL CUT: 3,841,920 C.Y. TOTAL FILL: 3,841,920 C.Y. (BALANCED ON SITE)
29. GRADE ELEVATIONS SHOWN IN THIS MAP AND ACCOMPANYING EXHIBIT 'A' ARE APPROXIMATE. THE ELEVATIONS MAY CHANGE BY 3 FEET. ELEVATION CHANGES MAY BE GREATER THAN 3 FEET BUT ONLY IF DETERMINED BY DPW AND DRP THAT THE REVISIONS ARE CONSISTENT WITH THE INTENT OF THE SUBDIVISION MAP APPROVAL.
30. ALIGNMENT AND GEOMETRICS OF STREETS ARE APPROXIMATE. ADJUSTMENTS TO STREETS CAN BE MADE PROVIDED THE DEPARTMENT OF PUBLIC WORKS AND DRP DETERMINE THAT THE ADJUSTMENTS ARE CONSISTENT WITH THE INTENT OF THE SUBDIVISION APPROVAL.
31. LOT LINES CAN BE ADJUSTED PROVIDED NO ADDITIONAL LOTS ARE CREATED. THE DEGREE OF ADJUSTMENT SHALL BE CONSISTENT WITH THE INTENT OF THE SUBDIVISION MAP ACT.
32. PERMISSION IS REQUESTED TO RECORD 20 ACRES LARGE LOT SUBDIVISION
33. PERMISSION IS REQUESTED TO COMBINE LOTS.
34. PERMISSION IS REQUESTED TO RECORD ADDITIONAL OPEN SPACE LOTS.
35. PERMISSION IS REQUESTED TO RECORD ADDITIONAL UTILITIES LOTS, PROVIDED MAINTENANCE EASEMENTS ARE GRANTED TO THE SATISFACTION OF THE DRP AND DPW.
36. PROPOSED STREET GRADING IS APPROXIMATE ONLY AND SUBJECT TO ADJUSTMENTS PENDING DETERMINATION OF FINAL DEVELOPMENT LAYOUT AND PLANS.
37. REQUEST PERMISSION TO MASS GRADE.
38. REFER TO PROJECT DRAINAGE CONCEPT FOR WATER QUALITY TREATMENT DESIGN
39. PROVIDE SLOUGH WALLS AND DRAINAGE SWALES AT TOE OF SLOPE BEHIND THE R/W WHERE SLOPE IS HIGHER THAN 5'.
40. AN OFFER OF DEDICATION SHALL BE MADE TO THE GOVERNING AUTHORITY OF THE RIGHT TO RESTRICT DIRECT VEHICULAR ACCESS BETWEEN LOT 405 AND LAS ALTOS DRIVE.

UTILITIES AND SERVICES:

1. WATER........COUNTY WATER DISTRICT NO. 36
2. SEWER........SANTA CLARITA VALLEY
3. GAS........SOUTHERN CALIFORNIA GAS COMPANY
4. ELECTRIC........SOUTHERN CALIFORNIA EDISON COMPANY
5. TELEPHONE........GENERAL TELEPHONE
6. CABLE TV........TIME WARNER CABLE
7. SCHOOL........CASTAIC SCHOOL DISTRICT & WILLIAM S. HART UNIFIED HIGH SCHOOL DISTRICT

AIRSPACE EASEMENT NOTES

1. AIRSPACE EASEMENT @ 260' FOR 25 MPH TO BE DEDICATED TO L.A.C.R.D.
2. AIRSPACE EASEMENT @ 310' FOR 30 MPH TO BE DEDICATED TO L.A.C.R.D.
3. AIRSPACE EASEMENT @ 415' FOR 40 MPH TO BE DEDICATED TO L.A.C.R.D.

BENCH MARK

NEWHALL 2009 L 6095

DESCRIPTION: LACO BM TAG IN N CB 33' N/O C/L HASLEY CYN RD @ LT STD #4444855E (0.3 MI W/O GIBRALTAR LN)

ELEVATION 1210.210

SHEET INDEX

SHEET	DESCRIPTION
1	GENERAL NOTES, INDEX MAP
2	LOT SCHEDULES, SECTIONS
3	PHASE II GRADING
4	PHASE II GRADING
5	PHASE II GRADING
6	PHASE I GRADING
7	LEGAL DESCRIPTION, EASEMENT NOTES, DETAILS

GRAPHIC SCALE
(IN FEET)
200 100 0 200 400 600

OWNER/DEVELOPER:
SFI LOS VALLES LLC
10960 WILSHIRE BLVD., SUITE 1260 LOS ANGELES, CA 90024
PH.: (310) 315-5566 FAX: (310) 315-7017

LEGAL DESCRIPTION:
SEE SHEET NO. 7

C.U.P. EXHIBIT "A"
MAJOR LAND DIVISION
REVISED
VESTING TENTATIVE TRACT MAP NO.
052584
IN THE UNINCORPORATED TERRITORY OF COUNTY OF LOS ANGELES, STATE OF CALIFORNIA

DRAWN BY	LDC
CHECKED BY	C.G.
DESIGNED BY	LDC

DATE CHANGED	CHANGED BY	REVISION

REGISTERED PROFESSIONAL ENGINEER CHARLES A. GILMAN No. 54155 Exp. 12-31-15 CIVIL STATE OF CALIFORNIA

PREPARED BY:
LAND DESIGN CONSULTANTS, INC.
Land Planning, Civil Engineering, Surveying & Environmental Services
2700 Foothill Blvd., Suite 200, Pasadena, California 91107
Ph.: (626) 578-7000, Fax: (626) 578-7373
http://www.ldcla.com

Charles A. Gilman, R.C.E. No. C54155 12/08/2015 DATE

LDC

Project. No. 11018-001

J:\Civil 3D Projects\11018001\50_Sheet Sets\10_Planning\CUP\SHEET 01.dwg Dec 08, 2015 9:39 am MSERKI

RECEIVED
DEPT OF REGIONAL PLANNING
TR52584 EXHIBIT PG 2
DATE: 09 DEC 2015

LOT SCHEDULE

* NOTE: SEE NET LOT AREA TABLE BELOW

Lot Table			Lot Table			Lot Table			Lot Table			Lot Table			Lot Table			Lot Table			
Lot No.	Area (SF) Gross	PAD AREA (SF)	Lot No.	Area (SF) Gross	PAD AREA (SF)	Lot No.	Area (SF) Gross	PAD AREA (SF)	Lot No.	Area (SF) Gross	PAD AREA (SF)	Lot No.	Area (SF) Gross	PAD AREA (SF)	Lot No.	Area (SF) Gross	PAD AREA (SF)	Lot No.	Area (SF) Gross	PAD AREA (SF)	
1	9,385	7,927	79	11,549	6,222	157	10,138	7,816	235	10,251	9,593	313	10,147	9,272	391	15,307	13,396	469	9,119	8,556	LOTS 1-497 ALL SINGLE FAMILY RESIDENTIAL LOTS
2	7,301	7,135	80	10,281	5,988	158	10,831	6,891	236	7,150	6,760	314	16,821	16,203	392	21,226	13,087	470	18,735	10,798	
3	7,888	7,864	81	10,239	5,926	159	9,581	5,920	237	7,664	7,384	315	30,767	16,011	393	12,886	7,557	471	17,167	10,177	
4	7,944	7,934	82	10,081	6,278	160	9,697	5,649	238	8,766	8,235	316	16,181	9,138	394	10,560	8,184	472	15,754	9,408	
5	7,064	6,529	83	9,978	6,273	161	10,154	5,871	239	7,507	7,484	317	21,160	11,016	395	19,874	10,516	473	13,988	8,760	
6	7,442	6,867	84	9,982	6,218	162	10,406	6,255	240	7,093	7,092	318	* 19,350	13,085	396	16,726	7,618	474	13,621	11,290	
7	8,685	7,752	85	9,899	6,158	163	11,222	6,681	241	7,085	7,084	319	21,419	16,818	397	16,436	7,616	475	14,465	10,123	
8	10,202	9,007	86	9,765	5,985	164	11,536	6,881	242	* 7,183	7,074	320	21,301	21,301	398	13,335	7,317	476	15,626	10,141	
9	8,472	7,905	87	10,709	6,052	165	11,751	6,589	243	* 8,172	6,365	321	15,939	13,395	399	14,419	9,151	477	17,184	11,109	
10	8,399	7,640	88	10,713	5,826	166	* 16,381	14,570	244	25,845	11,443	322	11,703	10,435	400	15,189	9,703	478	11,057	8,866	
11	* 8,729	6,905	89	12,378	7,159	167	* 21,283	15,848	245	* 13,334	9,050	323	10,210	9,657	401	14,967	10,338	479	10,019	8,353	
12	* 12,010	10,257	90	9,436	6,509	168	13,252	12,374	246	8,529	8,523	324	10,434	9,923	402	12,974	8,510	480	9,319	7,945	
13	13,746	12,146	91	7,565	7,057	169	8,124	7,321	247	8,797	7,501	325	10,782	10,260	403	19,144	12,461	481	8,610	7,457	
14	15,974	13,994	92	7,609	7,607	170	8,823	7,300	248	* 14,679	9,965	326	10,841	10,331	404	15,238	9,818	482	8,329	7,650	
15	10,217	8,198	93	7,679	7,620	171	10,036	8,959	249	11,842	8,084	327	10,775	10,249	405	15,606	10,151	483	8,604	8,066	
16	* 14,772	12,416	94	7,620	7,620	172	16,279	14,548	250	12,949	8,951	328	10,295	9,780	406	16,117	10,232	484	14,079	14,079	
17	* 15,209	12,557	95	7,620	7,620	173	10,851	6,996	251	* 10,329	6,399	329	10,543	10,015	407	21,566	10,730	485	17,639	17,639	
18	10,248	7,831	96	7,731	7,214	174	9,747	7,225	252	* 9,798	8,566	330	10,774	10,249	408	15,913	11,657	486	16,838	16,252	
19	* 10,985	7,708	97	7,729	7,214	175	9,993	7,599	253	7,863	7,422	331	* 13,804	13,804	409	14,639	10,342	487	15,573	14,049	
20	* 11,666	9,250	98	7,705	7,138	176	10,619	8,358	254	7,603	7,172	332	22,322	18,061	410	18,599	13,750	488	19,197	17,576	
21	10,885	7,866	99	8,253	8,065	177	14,567	10,421	255	8,804	8,339	333	19,069	11,586	411	13,508	10,262	489	16,441	16,439	
22	14,399	8,678	100	9,553	5,831	178	8,565	8,242	256	* 13,353	7,298	334	16,772	10,070	412	13,696	11,120	490	14,984	14,383	
23	* 12,159	10,089	101	9,311	5,663	179	7,894	7,856	257	* 16,623	16,153	335	17,438	9,928	413	15,259	12,748	491	16,201	15,638	
24	* 9,288	8,322	102	9,596	5,126	180	7,930	7,930	258	* 15,735	15,669	336	17,314	10,619	414	16,613	13,809	492	13,176	11,321	
25	10,589	8,799	103	9,515	5,450	181	7,995	7,995	259	39,673	12,644	337	16,279	10,486	415	16,405	14,805	493	11,835	9,760	
26	10,313	9,483	104	9,491	5,491	182	8,125	8,125	260	21,872	10,023	338	16,398	10,215	416	20,169	19,654	494	10,477	9,354	
27	10,039	9,542	105	9,489	5,490	183	9,057	8,938	261	* 20,953	10,290	339	16,417	9,339	417	22,200	22,107	495	9,618	7,791	
28	11,159	11,892	106	9,600	6,000	184	10,169	10,156	262	20,065	10,335	340	16,113	9,403	418	16,995	16,995	496	9,347	8,830	
29	10,296	10,296	107	9,600	6,000	185	11,787	9,203	263	16,027	9,616	341	18,046	9,191	419	12,214	11,822	497	12,272	8,915	
30	10,861	10,846	108	9,541	5,880	186	14,641	10,414	264	16,559	10,611	342	18,090	10,457	420	11,526	11,526	498	9,799	-	FEE-TITLE LOTS TO LACFCD
31	11,238	11,238	109	9,611	6,004	187	11,050	9,394	265	16,575	10,376	343	20,618	12,837	421	12,429	12,429	499	16,603	-	
32	7,451	7,451	110	9,654	5,635	188	10,958	10,495	266	* 15,222	9,788	344	12,852	8,945	422	10,471	10,471	500	33,083	-	
33	7,732	7,732	111	11,766	5,368	189	11,009	10,322	267	* 18,248	11,977	345	22,989	13,813	423	10,758	10,758	501	48,751	-	
34	9,316	9,316	112	10,264	7,502	190	9,779	7,776	268	15,249	14,541	346	21,104	11,781	424	11,169	11,128	502	42,060	-	
35	9,378	9,272	113	7,740	7,740	191	11,533	8,980	269	13,460	10,720	347	18,585	10,674	425	12,466	12,363	503	36,274	-	
36	12,127	12,122	114	7,680	7,620	192	7,632	6,684	270	12,712	11,172	348	18,690	9,686	426	13,169	13,118	504	19,577	-	
37	8,439	8,139	115	7,679	7,618	193	7,317	6,203	271	16,748	13,194	349	16,256	9,935	427	13,309	13,304	505	23,199	-	
38	7,908	7,488	116	7,679	7,620	194	7,988	6,579	272	24,677	15,760	350	14,475	8,950	428	13,461	12,972	506	6,107	-	
39	11,384	8,619	117	7,679	7,620	195	8,577	6,712	273	20,543	12,384	351	13,034	9,746	429	18,096	10,691	507	25,643	-	
40	10,507	8,110	118	7,696	7,636	196	8,749	6,347	274	20,646	12,683	352	12,808	9,640	430	20,778	20,778	508	8,518	-	
41	7,963	5,169	119	7,502	7,502	197	8,941	5,930	275	19,586	13,010	353	11,355	11,661	431	17,066	17,066	509	* 81,754	-	
42	7,500	5,469	120	7,615	6,606	198	* 8,410	5,695	276	17,968	12,575	354	11,239	11,239	432	16,271	16,271	510	67,394	-	WATER TANK LOT
43	7,500	5,259	121	7,611	6,849	199	* 13,577	6,114	277	17,464	12,318	355	11,540	10,694	433	26,002	26,002	511	* 324,640	-	PUBLIC PARK
44	8,620	6,154	122	10,888	6,252	200	15,320	8,449	278	18,035	12,623	356	11,320	11,189	434	12,329	11,965	512	298,452	-	RECREATIONAL AREA LOTS TO H.O.A.
45	7,591	5,938	123	13,664	7,364	201	11,915	7,587	279	18,883	13,399	357	10,804	10,709	435	13,116	12,717	513	* 38,747	-	
46	7,984	6,743	124	9,485	5,681	202	16,028	7,774	280	19,413	13,416	358	10,489	10,445	436	15,003	14,240	514	* 29,027	-	
47	9,439	7,150	125	9,598	5,574	203	17,336	8,365	281	19,464	13,633	359	10,200	10,174	437	12,644	9,753	515	20,708	-	
48	10,379	6,400	126	9,404	5,390	204	19,231	9,136	282	19,050	14,014	360	* 10,778	10,778	438	9,756	9,723	516	* 60,988	-	
49	8,933	6,635	127	9,421	5,824	205	21,849	11,096	283	18,429	14,134	361	* 11,183	11,183	439	10,320	10,320	517	* 149,655	-	
50	8,140	7,786	128	9,421	6,048	206	22,304	9,761	284	16,532	16,074	362	* 11,756	11,756	440	10,126	10,126	518	* 472,432	-	
51	7,539	5,780	129	9,421	6,836	207	17,779	7,507	285	22,262	16,633	363	* 15,546	15,622	441	10,332	9,749	519	* 144,143	-	
52	7,170	5,291	130	9,420	7,080	208	16,332	7,646	286	17,489	15,678	364	9,909	9,903	442	11,058	10,230	520	* 70,836	-	
53	7,003	5,403	131	9,360	7,080	209	* 16,136	7,631	287	16,289	13,783	365	10,736	10,134	443	10,392	9,587	521	* 1,238,111	-	OPEN SPACE LOTS
54	7,000	5,555	132	12,686	8,471	210	* 16,221	7,827	288	16,862	13,734	366	12,066	10,564	444	10,133	9,088	522	* 290,600	-	
55	7,702	5,867	133	8,232	7,436	211	16,569	8,075	289	16,375	13,439	367	11,815	10,621	445	11,970	10,389	523	1,285,012	-	
56	* 9,314	6,558	134	7,575	7,072	212	15,571	8,227	290	17,662	14,351	368	12,072	10,835	446	9,656	8,377	524	1,326,585	-	
57	* 10,944	8,412	135	7,520	7,520	213	14,050	8,014	291	17,527	14,466	369	12,033	10,790	447	11,621	10,325	525	474,561	-	
58	* 10,578	6,755	136	7,558	7,500	214	14,077	8,065	292	17,882	14,756	370	12,007	10,774	448	10,816	9,280	526	614,490	-	
59	* 7,281	6,156	137	7,559	7,500	215	14,093	8,046	293	17,947	14,552	371	10,554	9,665	449	10,901	9,267	527	480,630	-	
60	7,744	6,638	138	7,522	7,522	216	14,109	8,286	294	17,688	14,428	372	10,459	9,664	450	12,172	10,225	528	302,550	-	
61	7,265	6,455	139	7,528	7,026	217	14,125	8,092	295	18,382	15,884	373	10,470	9,703	451	13,370	11,336	529	275,168	-	
62	7,335	7,167	140	7,504	7,003	218	14,141	7,401	296	21,513	12,129	374	10,472	9,691	452	12,267	11,040	530	* 611,586	-	
63	7,345	7,280	141	7,363	6,866	219	14,157	7,248	297	17,594	12,616	375	10,435	9,658	453	15,609	11,226	531	528,570	-	
64	7,280	7,280	142	7,429	6,935	220	14,146	6,934	298	15,491	12,632	376	10,468	9,692	454	14,390	8,495	532	* 443,018	-	
65	7,326	7,297	143	7,684	7,166	221	15,723	6,880	299	22,265	21,081	377	11,621	10,158	455	11,543	8,250	533	78,251	-	
66	7,336	7,270	144	9,216	8,659	222	18,812	6,137	300	20,727	16,494	378	12,439	10,139	456	13,379	8,135	534	71,278	-	
67	7,197	7,108	145	8,710	7,974	223	16,506	5,850	301	21,002	18,553	379	12,972	10,737	457	15,193	10,794	535	* 27,988	-	
68	7,204	6,637	146	8,507	7,536	224	19,114	7,168	302	22,872	22,872	380	14,219	9,749	458	11,389	8,750	536	54,863	-	
69	7,249	6,482	147	8,221	6,817	225	20,807	8,759	303	16,439	16,347	381	17,370	12,536	459	8,325	8,325	537	1,523	-	FEE-TITLE LOTS TO H.O.A.
70	7,265	6,486	148	8,299	6,846	226	21,272	12,065	304	15,096	15,091	382	15,795	13,572	460	10,349	8,869	538	574	-	
71	8,113	7,069	149	8,254	6,600	227	10,885	9,101	305	15,106	13,547	383	13,696	12,172	461	11,470	8,227	539	4,057	-	
72	7,993	6,621	150	8,138	6,160	228	9,996	8,400	306	17,401	13,021	384	16,040	12,938	462	10,105	8,798	540	6,918	-	BOOSTER STATION
73	* 8,353	7,108	151	8,293	6,541	229	12,767	10,180	307	22,383	12,971	385	16,888	13,811	463	* 11,427	9,211				
74	* 9,529	7,954	152	9,850	8,592	230	7,150	6,254	308	16,582	13,427	386	18,296	14,006	464	11,894	11,286				
75	* 14,516	9,359	153	10,064	8,969	231	7,664	7,006	309	16,519	16,117	387	18,077	12,077	465	17,488	11,264				
76	15,311	9,004	154	13,315	11,719	232	8,072	8,072	310	* 10,929	8,205	388	13,803	9,594	466	9,420	9,414				
77	14,844	9,141	155	* 12,623	11,246	233	10,694	10,157	311	8,866	8,129	389	25,466	15,743	467	9,681	9,142				
78	14,298	8,298	156	* 9,794	7,911	234	10,714	10,093	312	9,227	8,429	390	18,378	15,703	468	8,205	7,706				

NET LOT AREA TABLE

LOT NO.	LOT AREA (GROSS SF.)	LOT AREA (NET SF)
11	8,729	7,555
12	12,010	9,908
16	14,772	13,330
17	15,209	15,128
19	10,985	10,847
20	11,666	11,559
23	12,159	11,191
24	9,288	8,823
56	9,314	8,387
57	10,944	8,736
58	10,578	8,707
59	7,981	6,391
73	8,353	8,280
74	9,529	8,389
75	14,516	12,565
155	12,623	11,650
156	9,794	9,413
166	16,381	15,424
167	21,283	16,158
198	8,410	8,235
199	13,577	11,825
209	16,136	15,810
210	16,221	15,798
242	7,183	7,074
243	8,172	7,605
245	13,334	11,906
248	14,649	14,280
251	10,329	8,553

LOT NO.	LOT AREA (GROSS SF.)	LOT AREA (NET SF)
252	9,798	9,332
256	13,353	7,298
257	16,623	14,433
258	15,735	13,545
261	20,953	18,512
266	15,522	15,243
267	18,248	13,522
310	12,129	9,945
318	19,350	15,174
331	13,804	12,481
360	10,778	9,044
361	11,183	8,989
362	11,756	10,789
463	11,427	11,052
509	81,754	81,036
511	324,640	309,496
513	38,747	33,139
514	29,027	13,612
516	60,988	58,478
517	149,655	130,170
518	472,432	465,230
519	144,143	139,152
520	70,836	67,535
521	1,238,111	1,046,954
522	290,600	288,323
531	528,570	521,370
532	443,018	434,558
534	71,278	70,379

LOT SUMMARY

DESIGNATION	LOT NO.	NO. OF LOTS	(A.C.) (APPROX.)
SINGLE FAMILY LOTS	1-497	497	144.38
STORM DRAIN MAINTENANCE LOTS	498-509	12	8.07
WATER TANK	510	1	1.55
PUBLIC PARK	511	1	7.45
REC. AREA	512-519	9	29.50
OPEN SPACE	520-536	16	186.03
FEE-TITLE	537-539	3	0.14
BOOSTER STATION	540	1	0.16
HASLEY CANYON ROAD	-	-	0.70
DEDICATED STREET AREA	-	-	19.87
PRIVATE AND FUTURE STREET AREA	-	-	22.39
PRIVATE STREET AREA	-	-	10.16
TOTAL		540	±430.40

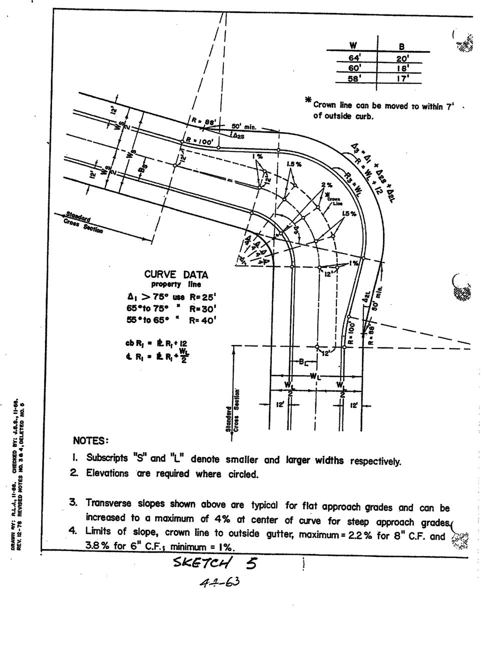

TYPICAL RESIDENTIAL KNUCKLE DETAIL

NOT TO SCALE
PER L.A.C.D.P.W. LAND DEVELOPMENT DIVISION HANDBOOK, VOLUME 5, CHAPTER 44, PAGE 44-63

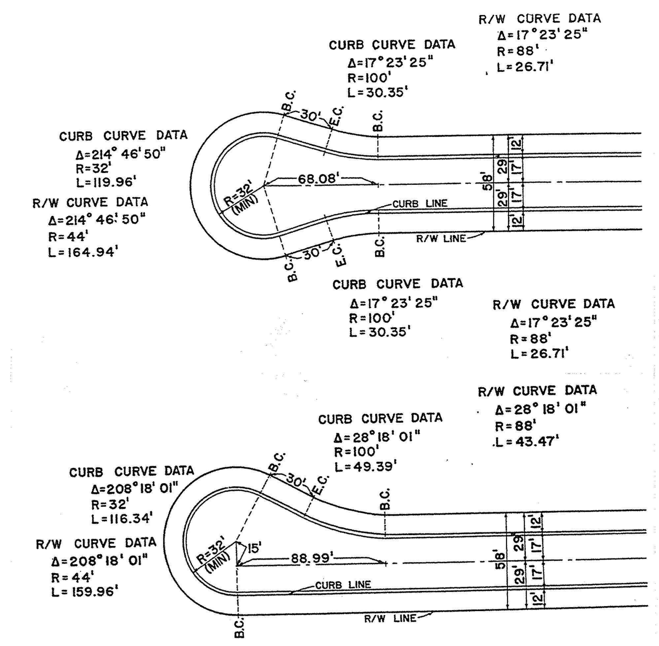

TYPICAL RESIDENTIAL CUL-DE-SAC DETAIL

NOT TO SCALE
PER L.A.C.D.P.W. LAND DEVELOPMENT DIVISION HANDBOOK, VOLUME 5, CHAPTER 44, PAGE 44-38

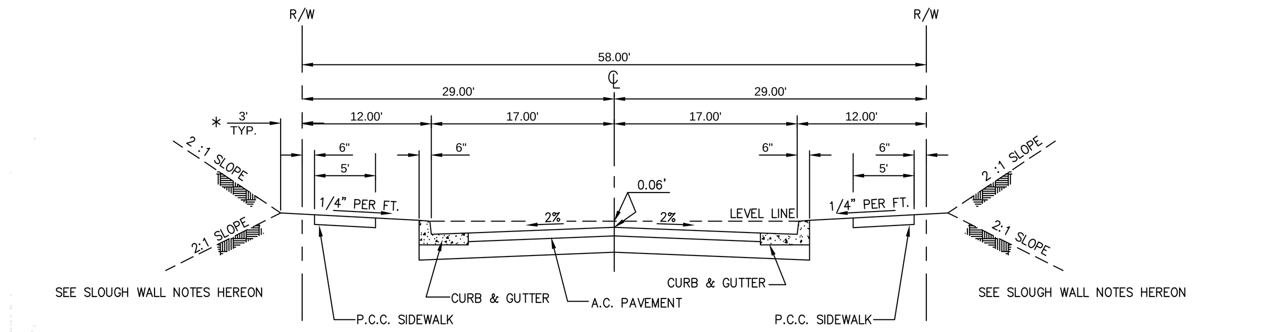

* TOP OF FILL SLOPE SHALL BE 3' FROM RIGHT OF WAY EXCEPT WHERE GRADING WORK HAS BEEN PREVIOUSLY CERTIFIED PER APPROVED GRADING PLAN GPC 04-0802-0002 AND THE DISTANCE MEASURES NOT LESS THAN 2 FEET

TYPICAL SECTION 58' R/W

STREET "CC", "G", "H", "L", "M", "N", "Q", "U", "V" AND BUENA VIDA WAY
NOT TO SCALE

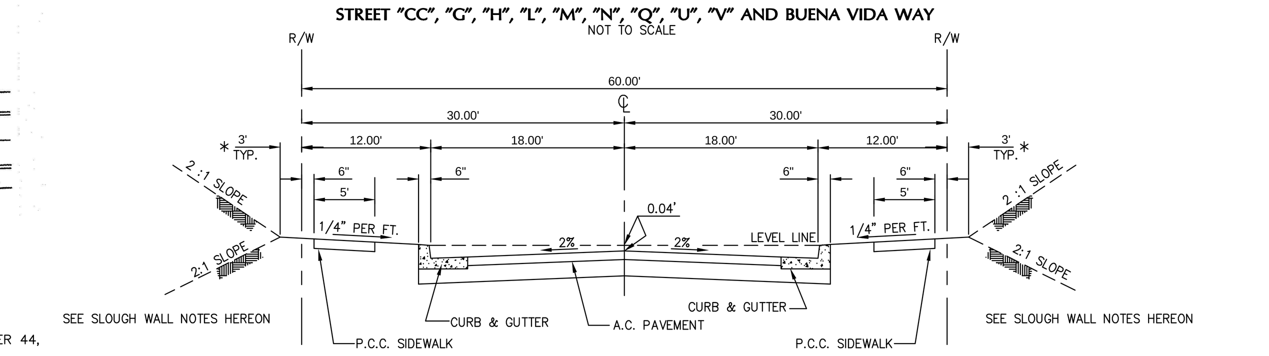

* TOP OF FILL SLOPE SHALL BE 3' FROM RIGHT OF WAY EXCEPT WHERE GRADING WORK HAS BEEN PREVIOUSLY CERTIFIED PER APPROVED GRADING PLAN GPC 04-0802-0002 AND THE DISTANCE MEASURES NOT LESS THAN 2 FEET

TYPICAL SECTION 60' R/W

STREET "C", "CC", "D", "K", "N", "P", "R", "S" AND "T"
VISTA GRANDE PLACE, LOS MONTANES DR. & BUENA VIDA WAY
NOT TO SCALE

SLOUGH WALL NOTE:
WHEN ASCENDING SLOPE HEIGHT IS GREATER THAN 5 FEET AND THE SIDEWALK IS ADJACENT TO THE RIGHT-OF-WAY, A SLOUGH WALL IS REQUIRED.

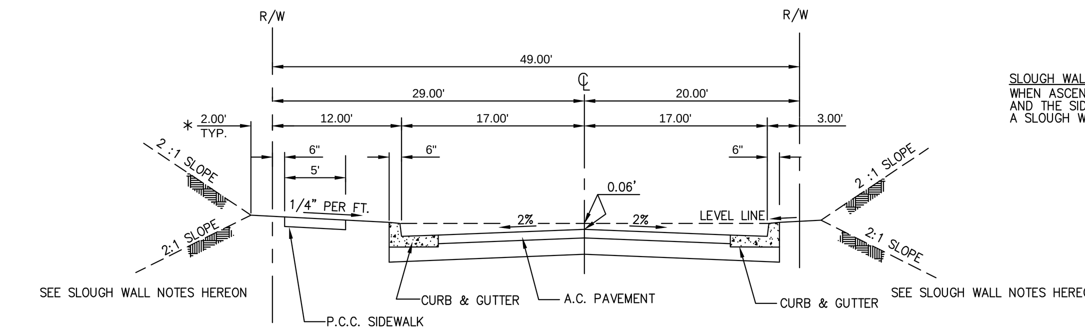

* TOP OF FILL SLOPE SHALL BE 3' FROM RIGHT OF WAY EXCEPT WHERE GRADING WORK HAS BEEN PREVIOUSLY CERTIFIED PER APPROVED GRADING PLAN GPC 04-0802-0002 AND THE DISTANCE MEASURES NOT LESS THAN 2 FEET

TYPICAL SECTION 49' R/W

BELLEZA WAY
NOT TO SCALE

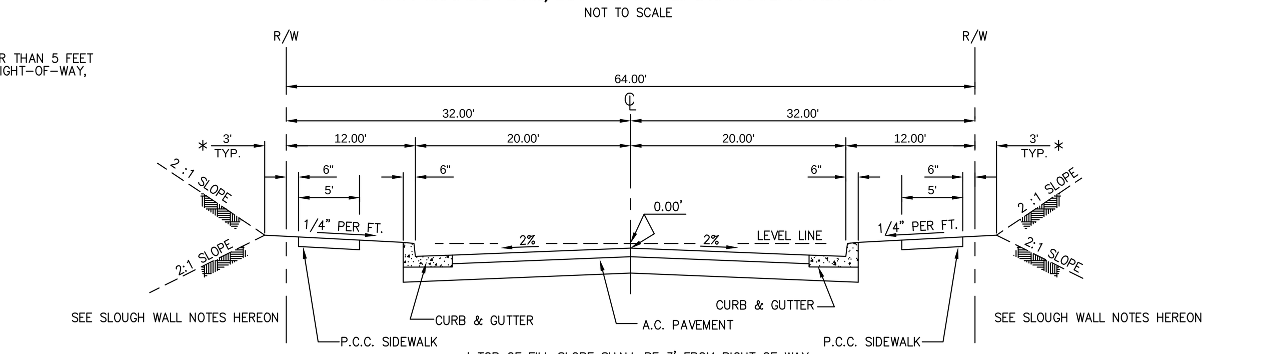

* TOP OF FILL SLOPE SHALL BE 3' FROM RIGHT OF WAY EXCEPT WHERE GRADING WORK HAS BEEN PREVIOUSLY CERTIFIED PER APPROVED GRADING PLAN GPC 04-0802-0002 AND THE DISTANCE MEASURES NOT LESS THAN 2 FEET

TYPICAL SECTION 64' R/W

STREET "A", "B", "C", "E", "F" & "J"
BARCELONA DR., HAYWARD DR.
LOS ALTOS DR. & LOS VALLES DR.
NOT TO SCALE

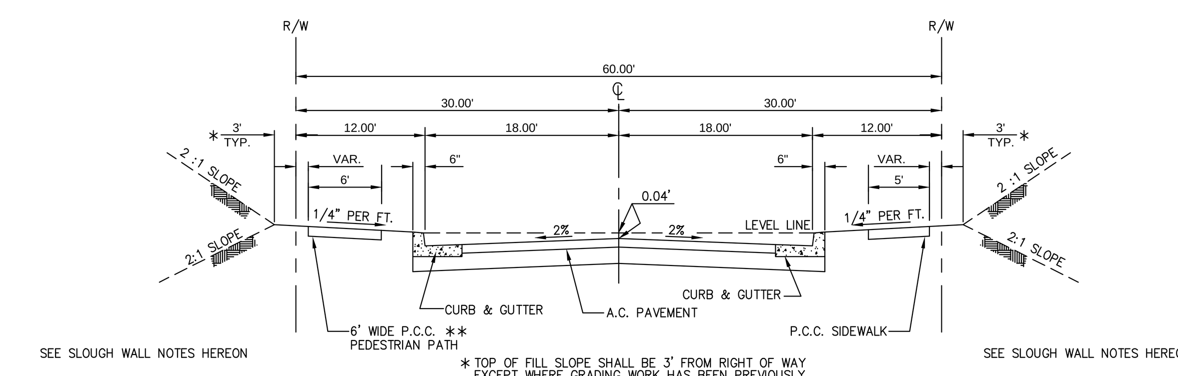

* TOP OF FILL SLOPE SHALL BE 3' FROM RIGHT OF WAY EXCEPT WHERE GRADING WORK HAS BEEN PREVIOUSLY CERTIFIED PER APPROVED GRADING PLAN GPC 04-0802-0002 AND THE DISTANCE MEASURES NOT LESS THAN 2 FEET
** LOCATION PER PLAN
LOS MONTANES DR.-MEANDERING ON NORTH SIDE ADJACENT TO OPEN SPACE

MEANDERING TYPICAL SECTION 60' R/W

LOS MONTANES DR
NOT TO SCALE

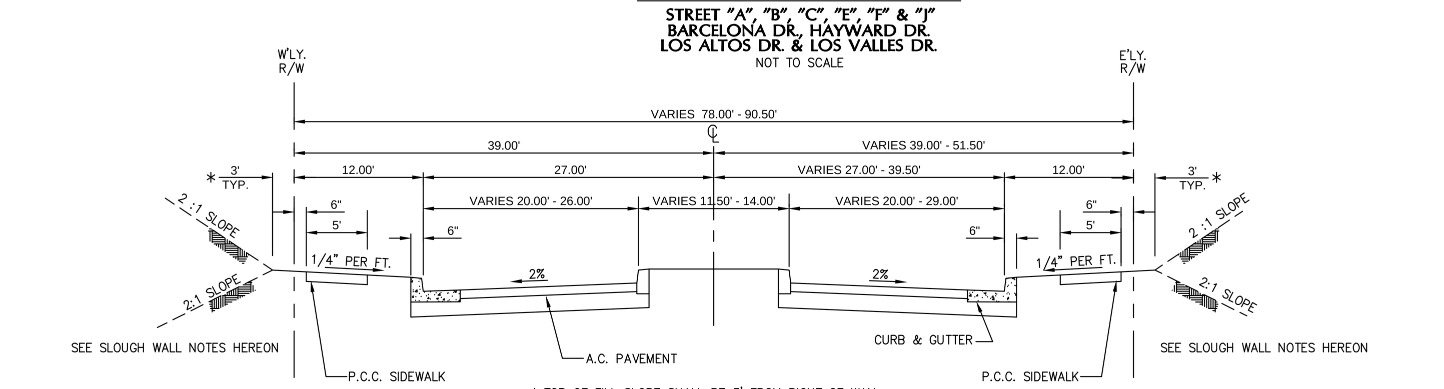

* TOP OF FILL SLOPE SHALL BE 3' FROM RIGHT OF WAY EXCEPT WHERE GRADING WORK HAS BEEN PREVIOUSLY CERTIFIED PER APPROVED GRADING PLAN GPC 04-0802-0002 AND THE DISTANCE MEASURES NOT LESS THAN 2 FEET

TYPICAL SECTION 78' - 90.5' R/W

LOS VALLES DRIVE
NOT TO SCALE

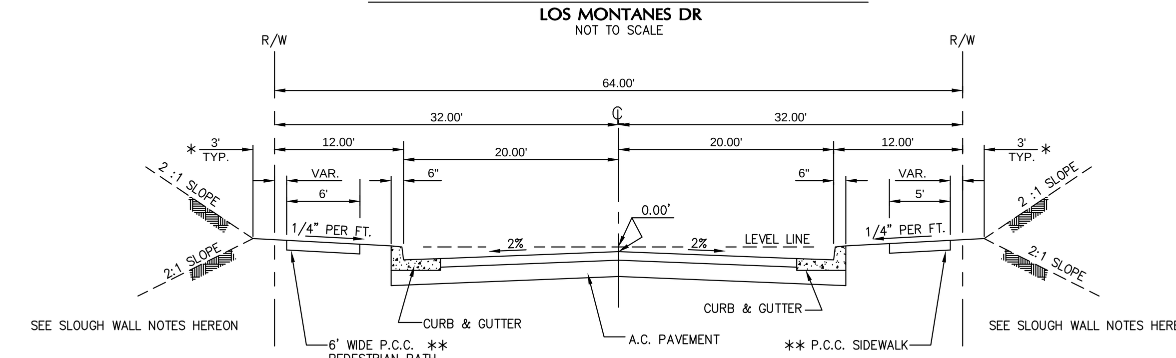

* TOP OF FILL SLOPE SHALL BE 3' FROM RIGHT OF WAY EXCEPT WHERE GRADING WORK HAS BEEN PREVIOUSLY CERTIFIED PER APPROVED GRADING PLAN GPC 04-0802-0002 AND THE DISTANCE MEASURES NOT LESS THAN 2 FEET
** LOCATION PER PLAN
"A" STREET-MEANDERING ON BOTH SIDES

MEANDERING TYPICAL SECTION 64' R/W

STREET "A" & STREET "B"
BARCELONA DR
NOT TO SCALE

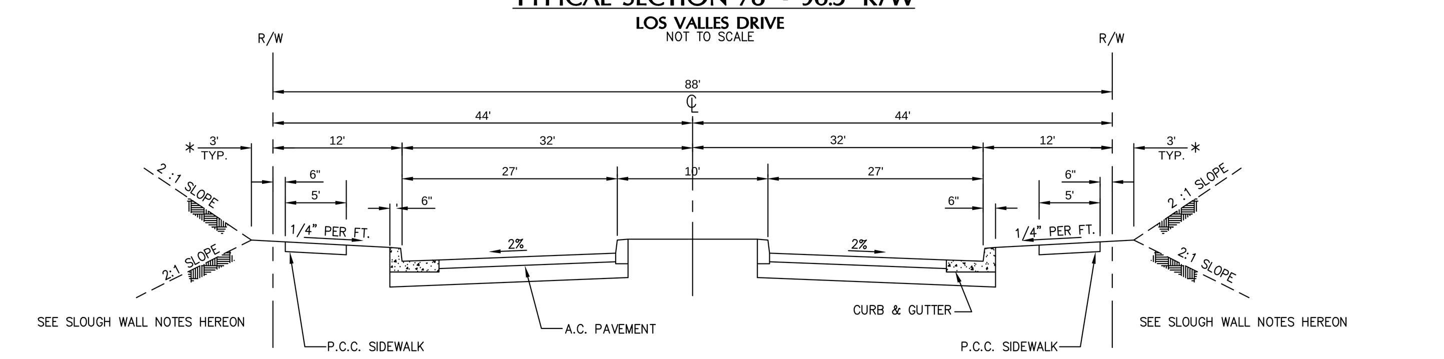

* TOP OF FILL SLOPE SHALL BE 3' FROM RIGHT OF WAY EXCEPT WHERE GRADING WORK HAS BEEN PREVIOUSLY CERTIFIED PER APPROVED GRADING PLAN GPC 04-0802-0002 AND THE DISTANCE MEASURES NOT LESS THAN 2 FEET

TYPICAL SECTION 88' R/W (GATED ENTRANCE)

STREET "A", "B" AND LOS MONTANES DR.
NOT TO SCALE

RECREATIONAL LOT USAGE

511 RECREATION AREA / AGRICULTURE
512 RECREATION AREA / ARRIVAL PLAZA
513 POCKET PARK
H.O.A. MAINTAINED PRIVATE UNDERGROUND STORM QUALITY BASIN WITH LANDSCAPED SURFACE
514 POCKET PARK
H.O.A. MAINTAINED PRIVATE UNDERGROUND STORM QUALITY BASIN WITH LANDSCAPED SURFACE
515 POCKET PARK
H.O.A. MAINTAINED PRIVATE UNDERGROUND STORM QUALITY BASIN WITH LANDSCAPED SURFACE
516 RECREATION AREA / ARRIVAL PLAZA
517 RECREATION CENTER
518 PLAYGROUND AND PEDESTRIAN PATH
519 ENTRY ICON / GARDEN

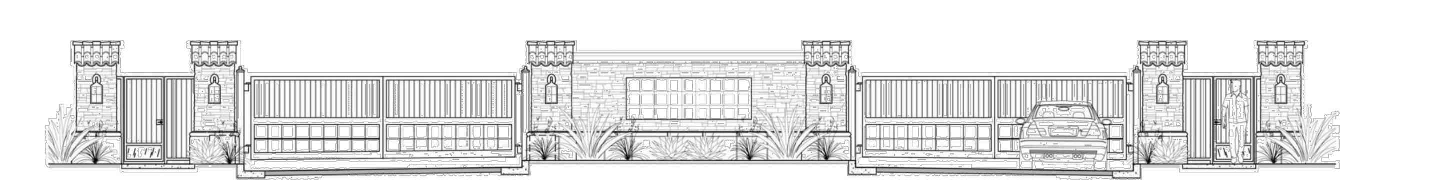

TYPICAL SECTION 88' R/W

(GATED ENTRANCE)
CONCEPTUAL ONLY
NOT TO SCALE

DEDICATED STREETS	PRIVATE AND FUTURE STREETS ***	PRIVATE STREET *
BARCELONA DRIVE	LOS MONTANES DRIVE	
LOS VALLES DRIVE	LOS ALTOS DRIVE	
HAYWARD DRIVE	BUENA VIDA WAY	
VISTA GRANDE PLACE	BELLEZA WAY	
	"A" STREET	
	"B" STREET	
	"CC" STREET	"C" STREET
		"D" STREET
	"E" STREET	
		"F" STREET
	"G" STREET	
	"H" STREET	
		"J" STREET
		"K" STREET
		"L" STREET
		"M" STREET
	"N" STREET	
	"P" STREET	
	"Q" STREET	
"R" STREET		
"S" STREET		
"T" STREET		
"U" STREET		
	"V" STREET	

*** "PRIVATE AND FUTURE STREETS" AND "PRIVATE STREETS" ARE ALSO FIRE LANES

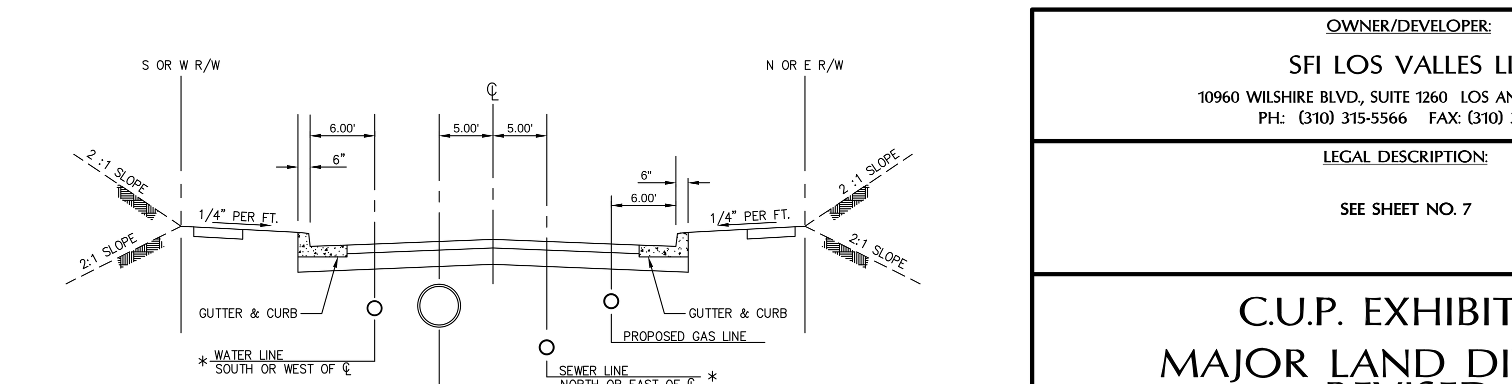

TYPICAL UTILITY LOCATION

NOT TO SCALE
* PIPE SIZE AND DEPTH PER ENGINEERING

OWNER/DEVELOPER:
SFI LOS VALLES LLC
10960 WILSHIRE BLVD., SUITE 1260 LOS ANGELES, CA 90024
PH.: (310) 315-5566 FAX: (310) 315-7017

LEGAL DESCRIPTION:
SEE SHEET NO. 7

C.U.P. EXHIBIT "A"
MAJOR LAND DIVISION REVISED
VESTING TENTATIVE TRACT MAP NO. 052584

IN THE UNINCORPORATED TERRITORY OF COUNTY OF LOS ANGELES, STATE OF CALIFORNIA.

DRAWN BY	LDC
CHECKED BY	C.G.
DESIGNED BY	LDC

DATE CHANGED	CHANGED BY	REVISION

REGISTERED PROFESSIONAL ENGINEER CHARLES A. GILMAN No. 54155 Exp. 12-31-15 CIVIL STATE OF CALIFORNIA

PREPARED BY:
LAND DESIGN CONSULTANTS, INC.
Land Planning, Civil Engineering, Surveying & Environmental Services
2700 Foothill Blvd., Suite 200, Pasadena, California 91107
Ph.: (626) 578-7000, Fax: (626) 578-7373
http://www.ldcla.com

Charles A. Gilman, R.C.E. No. C54155 12/08/2015 DATE

LDC
Project. No. 11018-001
SHEET 2 OF 7

J:\Civil 3D Projects\11018001\50_Sheet Sets\10_Planning\CUP\SHEET 02.dwg Dec 08, 2015 9:40 am MSERKI

RECEIVED
DEPT OF REGIONAL PLANNING
TR52584 EXHIBIT PG 3
DATE: 09 DEC 2015

SEE SHEET NO. 5 (PH-II) & 6 (PH-I)

SEE SHEET NO. 4

Curve Table				
Curve #	Length	Radius	Delta	Tangent
C2	20.223	350.000	003°18'38"	10.114
C3	738.747	525.000	080°37'23"	445.413
C4	1431.723	550.000	149°08'55"	1993.264
C5	460.034	800.000	032°56'51"	236.572
C6	593.007	700.000	048°32'18"	315.608
C7	209.392	475.000	025°15'27"	106.425
C8	346.097	550.000	036°03'16"	178.994
C9	222.710	800.000	015°57'01"	112.080
C10	551.498	350.000	090°16'53"	351.723
C11	858.682	450.000	109°19'51"	634.744
C12	227.090	1000.000	013°00'41"	114.036
C13	292.809	250.000	067°06'25"	165.807
C14	192.170	370.226	029°44'24"	98.302
C15	123.115	600.000	011°45'24"	61.775
C16	115.005	250.000	026°21'26"	58.538
C17	47.883	475.000	005°46'33"	23.962
C18	66.442	57.000	066°47'12"	37.575
C19	395.189	200.000	113°12'48"	303.393
C20	87.468	250.000	020°02'46"	44.185
C21	373.003	400.000	053°25'43"	201.305
C22	121.545	300.000	023°12'48"	61.618
C23	125.909	350.000	020°36'42"	63.642
C24	147.606	400.000	021°08'35"	74.652
C25	969.579	400.000	138°52'55"	1066.499
C26	310.197	600.000	029°37'18"	158.648
C27	531.930	350.000	087°04'41"	332.591
C28	157.380	500.000	018°02'04"	79.346
C29	550.701	350.000	090°09'04"	350.924
C30	365.982	175.000	119°49'27"	302.037
C31	157.062	800.000	011°14'55"	78.784

Line Table		
Line #	Length	Direction
L2	395.058	N65° 13' 24.19"W
L3	688.391	N41° 56' 33.21"W
L4	168.660	S03° 35' 32.87"W
L5	242.959	N23° 41' 47.01"E
L6	688.396	N56° 01' 19.83"W
L7	348.884	S43° 18' 30.91"W
L8	289.716	N56° 19' 11.60"E
L9	62.583	N46° 41' 29.09"W
L10	159.354	N50° 31' 54.55"E
L11	110.825	S38° 43' 09.41"W
L12	383.472	S84° 23' 13.11"W
L13	229.244	N07° 21' 22.84"W
L14	178.151	N82° 38' 37.16"E
L15	161.001	N82° 38' 37.16"E
L16	73.429	S70° 59' 56.95"E
L17	266.486	N65° 13' 24.19"W
L18	626.722	N65° 13' 24.19"W
L19	411.989	N47° 59' 23.78"E
L20	552.124	N65° 13' 24.19"W
L21	57.682	N85° 16' 10.20"W
L22	526.996	N23° 41' 47.01"E
L23	41.613	N29° 43' 55.50"W
L24	658.641	N65° 13' 24.19"W
L25	28.913	S42° 00' 36.22"E
L26	23.886	S33° 24' 15.09"W
L27	216.599	S75° 19' 28.86"E
L28	268.264	N88° 46' 12.37"E
L29	25.031	S70° 44' 08.36"W
L30	322.631	N24° 52' 48.36"E
L31	591.183	N64° 58' 08.10"W
L32	218.209	N54° 51' 18.49"E
L33	244.929	N25° 01' 51.90"E
L34	219.808	S88° 18' 00.84"W
L35	335.906	N01° 41' 59.16"W

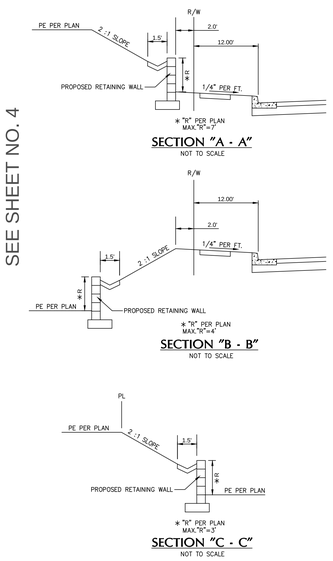

OWNER/DEVELOPER:

SFI LOS VALLES LLC
10960 WILSHIRE BLVD, SUITE 1260 LOS ANGELES, CA 90024
PH: (310) 315-5566 FAX: (310) 315-7017

LEGAL DESCRIPTION:

SEE SHEET NO. 7

C.U.P. EXHIBIT "A"

MAJOR LAND DIVISION REVISED
VESTING TENTATIVE TRACT MAP NO.

052584

IN THE UNINCORPORATED TERRITORY OF COUNTY OF LOS ANGELES, STATE OF CALIFORNIA

DRAWN BY	DATE CHANGED	CHANGED BY	REVISION
LDC			
CHECKED BY C.G.			
DESIGNED BY LDC			

REGISTERED PROFESSIONAL ENGINEER CHARLES A. GILMAN No. 54155 Exp. 12-31-15 CIVIL STATE OF CALIFORNIA

PREPARED BY:

LAND DESIGN CONSULTANTS, INC.
Land Planning, Civil Engineering, Surveying & Environmental Services
2700 Foothill Blvd., Suite 200, Pasadena, California 91107
Ph.: (626) 578-7000, Fax: (626) 578-7373
http://www.ldcla.com

Charles A. Gilman, R.C.E. No. C54155 — 12/08/2015 DATE

LDC

Project. No. 11018-001

SHEET 3 OF 7

J:\Cad 3D Projects\11018001\3A_Sheet Set\11_Planning\CUP\CUP EXHIBIT.dwg, Dec 08, 2015 9:46 am, MSilbo

RECEIVED
DEPT OF REGIONAL PLANNING
TR52584 EXHIBIT PG 4
DATE: 09 DEC 2015

APN 2865-079-004
APN 2865-079-003
APN 2865-079-002
APN 2865-083-010
TRACT 49048
APN 2865-083-005
APN 2865-083-007
APN 2865-070-001
TRACT 43750
APN 2866-050-007
TRACT 44800
APN 2866-051-001
APN 2866-051-049
APN 2866-042-006
APN 2866-042-005
APN 2866-052-002
TRACT 45084
TRACT BDRY
N89°31'30"W 2665.12'
N89°52'37"W 1309.72'
N89°48'42"W 838.16'
HAYWARD DRIVE
HAYWARD DR.
LOS MONTANES DR.
LOS ALTOS DR.
LOS ALTOS DR.
CATALUNA DR.
VISTA GRANDE PLACE
LA CUENA DRIVE
LA CUENA DRIVE
LA CUENA DRIV

RECEIVED
DEPT OF REGIONAL PLANNING
TR52584 EXHIBIT PG 5
DATE: 09 DEC 2015

SEE SHEET NO. 3

SEE SHEET NO. 4

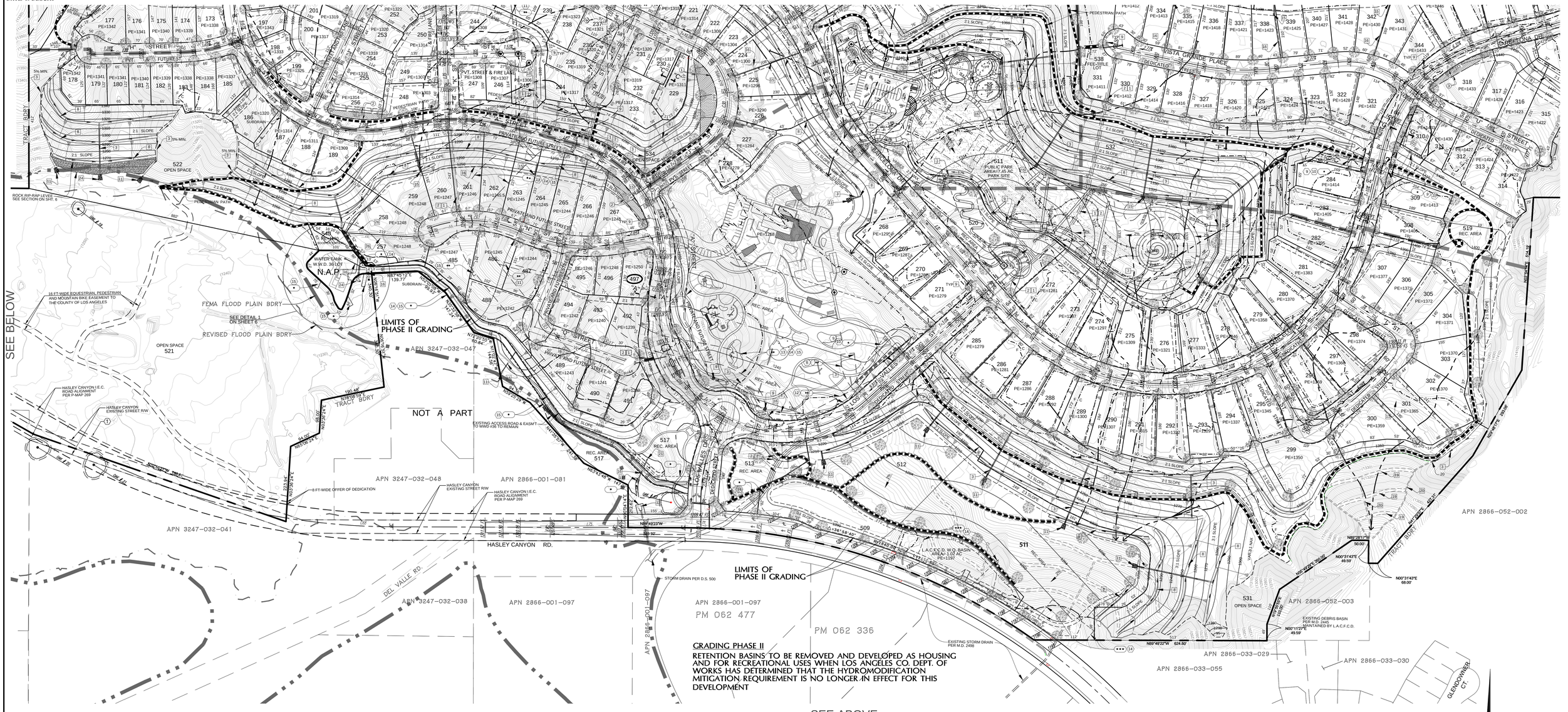

GRADING PHASE II

RETENTION BASINS TO BE REMOVED AND DEVELOPED AS HOUSING AND FOR RECREATIONAL USES WHEN LOS ANGELES CO. DEPT. OF WORKS HAS DETERMINED THAT THE HYDROMODIFICATION MITIGATION REQUIREMENT IS NO LONGER IN EFFECT FOR THIS DEVELOPMENT

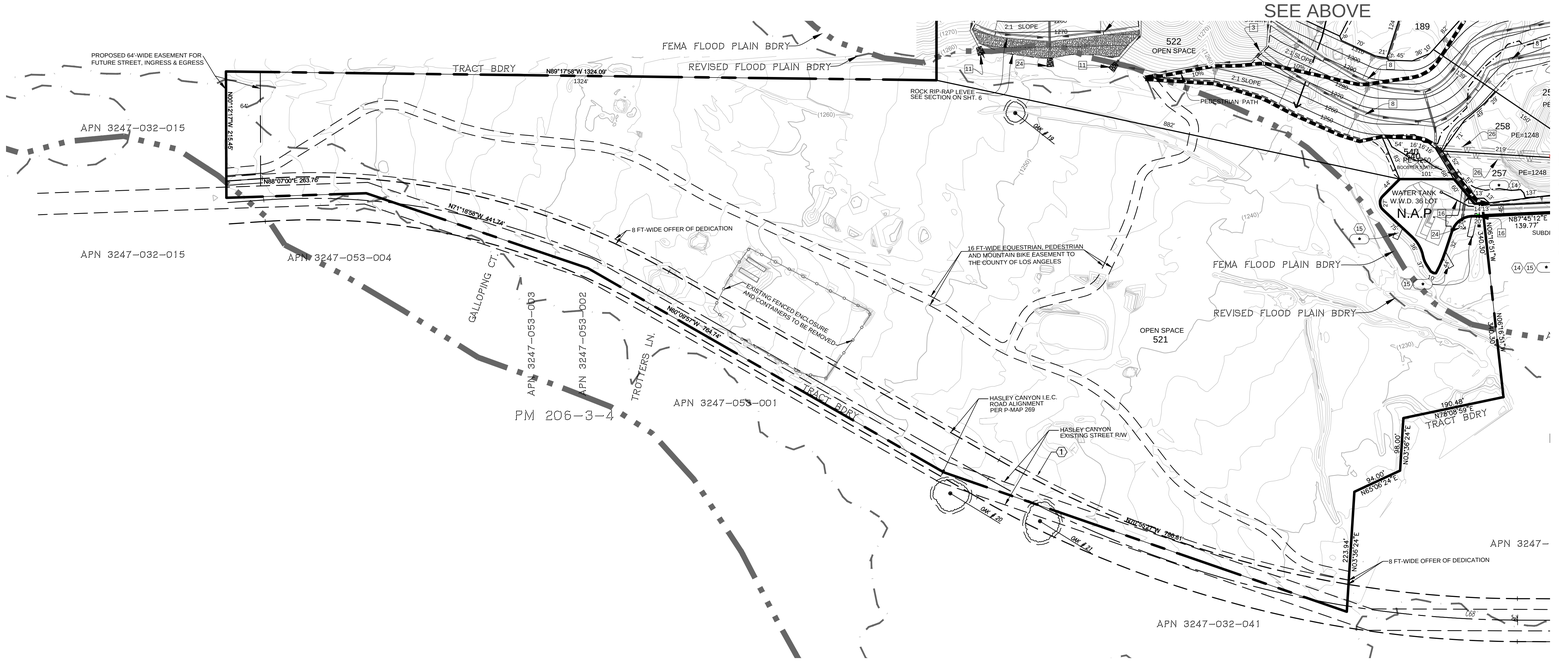

NOTE:
PREVIOUSLY APPROVED AND GRADED SLOPES TO BE RESTORED

GRAPHIC SCALE
(IN FEET)
100 50 0 100 200 300

Line Table		
Line #	Length	Direction
L61	15.000	S01° 13' 47.63"E
L62	268.264	N88° 46' 12.37"E
L63	25.031	S70° 44' 08.36"W
L64	216.599	S75° 19' 28.86"E
L65	218.209	N54° 51' 18.49"E
L66	489.446	S48° 03' 26.79"W
L67	116.599	N79° 06' 53.16"E
L68	15.000	S19° 27' 35.60"E
L69	14.941	S08° 53' 02.38"W
L70	124.094	N22° 26' 32.22"E
L71	235.516	N70° 21' 38.71"W
L72	688.391	N41° 56' 33.21"W
L73	21.135	S28° 19' 04.45"W
L74	74.831	S00° 00' 00.00"E
L75	868.861	S89° 48' 34.48"E
L76	198.131	S29° 02' 50.23"E
L77	198.131	S55° 48' 07.88"E

Curve Table				
Curve #	Length	Radius	Delta	Tangent
C54	969.579	400.000	138°52'55"	1066.499
C55	157.380	500.000	018°02'04"	79.346
C56	310.197	600.000	029°37'18"	158.648
C57	531.930	350.000	087°04'41"	332.591
C58	927.948	370.000	143°41'45"	1128.545
C59	181.145	525.000	019°46'09"	91.482
C60	137.806	524.000	015°04'05"	69.303
C61	265.947	351.000	043°24'43"	139.723
C62	70.991	300.000	013°33'30"	35.662
C63	87.465	54.000	092°48'11"	56.709
C64	209.392	475.000	025°15'27"	106.425
C65	1325.760	610.000	124°31'31"	1160.042
C66	247.120	500.000	028°19'04"	126.138
C67	1114.689	1800.000	035°28'54"	575.867
C68	1032.423	2000.000	029°34'36"	527.988
C69	90.131	55.000	093°53'36"	58.870
C70	286.362	865.000	018°58'05"	144.503
C71	90.131	55.000	093°53'36"	58.870

OWNER/DEVELOPER:
SFI LOS VALLES LLC
10960 WILSHIRE BLVD., SUITE 1260 LOS ANGELES, CA 90024
PH: (310) 315-5566 FAX: (310) 315-7017

LEGAL DESCRIPTION:
SEE SHEET NO. 7

C.U.P. EXHIBIT "A"
MAJOR LAND DIVISION REVISED
VESTING TENTATIVE TRACT MAP NO.
052584
IN THE UNINCORPORATED TERRITORY OF COUNTY OF LOS ANGELES, STATE OF CALIFORNIA

DRAWN BY			
LDC			
CHECKED BY			
C.G.			
DESIGNED BY			
LDC			
DATE CHANGED	CHANGED BY	REVISION	

REGISTERED PROFESSIONAL ENGINEER CHARLES A. GILMAN No. 54155 Exp. 12-31-15 CIVIL STATE OF CALIFORNIA

PREPARED BY:
LAND DESIGN CONSULTANTS, INC.
Land Planning, Civil Engineering, Surveying & Environmental Services
2700 Foothill Blvd., Suite 200, Pasadena, California 91107
Ph.: (626) 576-7000, Fax: (626) 578-7373
http://www.ldcla.com

Charles A. Gilman, R.C.E. No. C54155 — 12/08/2015 DATE

LDC
Project. No. 11018-001
SHEET 5 OF 7

RECEIVED
DEPT OF REGIONAL PLANNING
TR52584 EXHIBIT PG 6
DATE: 09 DEC 2015

SEE SHEET NO. 3

SEE SHEET NO. 4

SEE BELOW

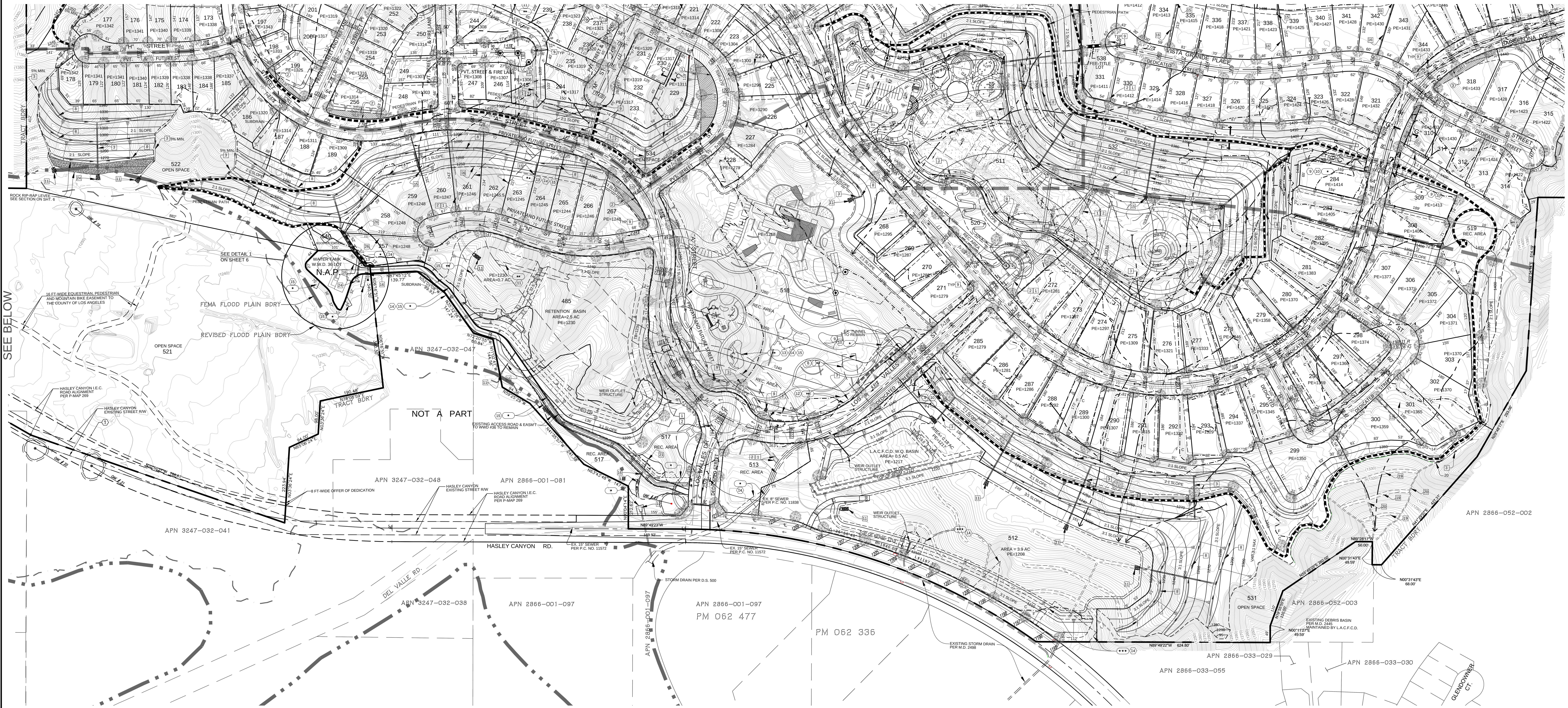

[*] NOTE:
PREVIOUSLY APPROVED AND GRADED SLOPES TO BE RESTORED

Line Table

Line #	Length	Direction
L61	15.000	S01° 13' 47.63"E
L62	268.264	N88° 46' 12.37"E
L63	25.031	S70° 44' 08.36"W
L64	216.599	S75° 19' 28.86"E
L65	218.209	N54° 51' 18.49"E
L66	489.446	S48° 03' 26.79"W
L67	116.599	N79° 06' 53.16"E
L68	15.000	S19° 27' 35.60"E
L69	14.941	S08° 53' 02.38"W
L70	124.094	N22° 26' 32.22"E
L71	235.516	N70° 21' 38.71"W
L72	688.391	N41° 56' 33.21"W
L73	21.135	S28° 19' 04.45"W
L74	74.831	S00° 00' 00.00"E
L75	868.861	S89° 48' 34.48"E
L76	198.131	S29° 02' 50.23"E
L77	198.131	S55° 48' 07.88"E

Curve Table

Curve #	Length	Radius	Delta	Tangent
C54	969.579	400.000	138°52'55"	1066.499
C55	157.380	500.000	018°02'04"	79.346
C56	310.197	600.000	029°37'18"	158.648
C57	531.930	350.000	087°04'41"	332.591
C58	927.948	370.000	143°41'45"	1128.545
C59	181.145	525.000	019°46'09"	91.482
C60	137.806	524.000	015°04'05"	69.303
C61	265.947	351.000	043°24'43"	139.723
C62	70.991	300.000	013°33'30"	35.662
C63	87.465	54.000	092°48'11"	56.709
C64	209.392	475.000	025°15'27"	106.425
C65	1325.760	610.000	124°31'31"	1160.042
C66	247.120	500.000	028°19'04"	126.138
C67	1114.689	1800.000	035°28'54"	575.867
C68	1032.423	2000.000	029°34'36"	527.988
C69	90.131	55.000	093°53'36"	58.870
C70	286.362	865.000	018°58'05"	144.503
C71	90.131	55.000	093°53'36"	58.870

N

GRAPHIC SCALE
(IN FEET)
100 50 0 100 200 300

OWNER/DEVELOPER:
SFI LOS VALLES LLC
10960 WILSHIRE BLVD., SUITE 1260 LOS ANGELES, CA 90024
PH.: (310) 315-5566 FAX: (310) 315-7017

LEGAL DESCRIPTION:
SEE SHEET NO. 7

C.U.P. EXHIBIT "A"
MAJOR LAND DIVISION REVISED
VESTING TENTATIVE TRACT MAP NO.
052584

IN THE UNINCORPORATED TERRITORY OF COUNTY OF LOS ANGELES, STATE OF CALIFORNIA

DRAWN BY LDC
CHECKED BY C.G.
DESIGNED BY LDC

DATE CHANGED	CHANGED BY	REVISION

REGISTERED PROFESSIONAL ENGINEER CHARLES A. GILMAN No. 54155 Exp. 12-31-15 CIVIL STATE OF CALIFORNIA

PREPARED BY:
LAND DESIGN CONSULTANTS, INC.
Land Planning, Civil Engineering, Surveying & Environmental Services
2700 Foothill Blvd., Suite 200, Pasadena, California 91107
Ph.: (626) 578-7000, Fax: (626) 578-7373
http://www.ldcla.com

Charles A. Gilman, R.C.E. No. C54155 12/08/2015 DATE

LDC

Project. No. 11018-001

RECEIVED
DEPT OF REGIONAL PLANNING
TR52584 EXHIBIT PG 7
DATE: 09 DEC 2015

EASEMENTS:

1. Easement(s)for the purpose(s) shown below and rights incidental thereto as set forth in a document;
   Purpose: Road purposes and incidental purposes
   Recorded: Book 5595, Page 332, of Official Records
   Affects: That portion of said land more particularly described therein.and recorded: Book 5682, Page 306, of Official Records

2. Easement(s) for the purpose(s) shown below and rights incidental thereto as set forth in a document;
   Purpose: Electrical supply systems and communication systems and incidental purposes
   Recorded: August 21, 1991, Instrument No. 91-1312408, of Official Records
   Affects: That portion of said land more particularly described therein.

3. Castaic Property Holdings, LLC, a California limited liability company and its assigns with the right to grant the same to the County of Los Angeles/Los Angeles County Flood Control District, or other appropriate agency forGrading and debris basin and incidental purposes recorded July 17, 2000, Instrument No. 00-1085593, of Official Records

4. Easement(s) for the purpose(s) shown below and rights incidental thereto as set forth in a document;
   Purpose: Drainage and incidental purposes
   Recorded: October 24, 2000, Instrument No. 00-1663987, of Official Records
   Affects: That portion of said land as more particularly described therein.

5. Easement(s)for the purpose(s) shown below and rights incidental thereto as set forth in a document;
   Purpose: Flood control purposes and incidental purposes
   Recorded: October 24, 2000, Instrument No. 00-1663990, of Official Records
   Affects: That portion of said land as more particularly described therein.

6. Easement(s) for the purpose(s) shown below and rights incidental thereto as set forth in a document;
   Purpose: Slopes and incidental purposes
   Recorded: October 24, 2000, Instrument No. 00-1663991, of Official Records
   Affects: That portion of said land as more particularly described therein.

7. Easement(s) for the purpose(s) shown below and rights incidental thereto as set forth in a document;
   Purpose: Public road and highway purposes and incidental purposes
   Recorded: October 24, 2000, Instrument No. 00-1663986, of Official Records
   Affects: That portion of said land as more particularly described therein.

8. Easement(s) for the purpose(s) shown below and rights incidental thereto as delineated or as offered for dedication, on the map of said tract.
   Purpose: Flood control purposes as dedicated to the Los Angeles County Flood Control District
   Affects: Lots 53, 56 and 58 as shown on the Map of said Tract 52584-01.

9. Easement(s) for the purpose(s) shown below and rights incidental thereto as delineated or as offered for dedication, on the map of said tract.
   Purpose: Bridge access purposes as dedicated to the County of Los Angeles
   Affects: Lots 56, 57, 58 and 60 as shown on the Map of Tract 52584-01.

10. Easement(s) for the purpose(s) shown below and rights incidental thereto as delineated or as offered for dedication, on the map of said tract.
    Purpose: Bridge maintenance purposes as dedicated to the County of Los Angeles
    Affects: Lots 56, 57 and 58 as shown on the Map of said Tract 52584-01.

11. Easement(s) for the purpose(s) shown below and rights incidental thereto as delineated or as offered for dedication, on the map of said tract.
    Purpose: Sanitary sewer purposes as dedicated to the County of Los Angeles
    Affects: Lots 51, 52 and 54 as shown on the Map of said Tract 52584-01.

12. Easement(s) for the purpose(s) shown below and rights incidental thereto as delineated or as offered for dedication, on the map of said tract.
    Purpose: Air space visibility purposes as dedicated to the County of Los Angeles
    Affects: Lots 43 and 51 as shown on the Map of Tract 52584-01.

13. Easement(s) for the purpose(s) shown below and rights incidental thereto as delineated or as offered for dedication, on the map of said tract.
    Purpose: Private driveway and fire lane
    Affects: As shown on the Map of Tract 52584-01.

14. Easement(s) for the purpose(s) shown below and rights incidental thereto as delineated or as offered for dedication, on the map of said tract.
    Purpose: Covered storm drain purposes as dedicated to the Los Angeles County Flood Control
    Affects: Lots 51, 52, 59, 60, 61 and 62 as shown on the Map of Tract 52584-01.

15. Easement(s) for the purpose(s) shown below and rights incidental thereto as delineated or as offered for dedication, on the map of said tract.
    Purpose: Water pipelines and appurtenances with ingress and egress as dedicated to the County of Los Angeles
    Affects: Lots 51, 52, 53, 59 and 62 as shown on the Map of Tract 52584-01.

16. Easement(s) for the purpose(s) shown below and rights incidental thereto as granted in a document.
    Granted to: Pacific Bell Telephone Company, a corporation dba AT&T California
    Purpose: Public utilities
    Recorded: December 19, 2008, Instrument No. 20082233802, of Official Records

LEGAL DESCRIPTION:

THE LAND REFERRED TO HEREIN BELOW IS SITUATED IN THE COUNTY OF LOS ANGELES, STATE OF CALIFORNIA, AND IS DESCRIBED AS FOLLOWS:

PARCEL 1: (APN 2866-001-017 & PORTIONS OF 2866-001-096; AND 3247-032-001, 035, & PORTIONS OF 3247-032-051)
PARCEL 1 OF CERTIFICATE OF COMPLIANCE FOR LOT LINE ADJUSTMENT NO. 101,922, IN THE COUNTY OF LOS ANGELES, STATE OF CALIFORNIA, WHICH RECORDED MAY 24, 2002 AS INSTRUMENT NO. 02-1208159 OF OFFICIAL RECORDS.
EXCEPTING THERE FROM THAT PORTION LYING WITHIN TRACT NO. 52584-01, IN THE COUNTY OF LOS ANGELES, STATE OF CALIFORNIA, AS PER MAP FILED IN BOOK 1329, PAGES 53 THROUGH 68, INCLUSIVE, OF MAPS, IN THE OFFICE OF THE COUNTY RECORDER OF SAID COUNTY.
ALSO EXCEPT THEREFROM THAT PORTION LYING WITHIN PARCEL 2 OF CERTIFICATE OF COMPLIANCE FOR LOT LINE ADJUSTMENT NO. 101,922, IN THE COUNTY OF LOS ANGELES, STATE OF CALIFORNIA, WHICH RECORDED MAY 24, 2002 AS INSTRUMENT NO. 02-1208159 OF OFFICIAL RECORDS.
ALSO EXCEPT THEREFROM THAT PORTION LYING WITHIN PARCEL 5 OF CERTIFICATE OF COMPLIANCE FOR LOT LINE ADJUSTMENT NO. 101,923, IN THE COUNTY OF LOS ANGELES, STATE OF CALIFORNIA, WHICH RECORDED AUGUST 17, 2001 AS INSTRUMENT NO. 01-1524850 OF OFFICIAL RECORDS.

PARCEL 2: (APN PORTIONS OF 3247-032-051)
PARCEL 2 OF CERTIFICATE OF COMPLIANCE FOR LOT LINE ADJUSTMENT NO. 101,922, IN THE COUNTY OF LOS ANGELES, STATE OF CALIFORNIA, WHICH RECORDED MAY 24, 2002 AS INSTRUMENT NO. 02-1208159 OF OFFICIAL RECORDS.
EXCEPTING THERE FROM THAT PORTION LYING WITHIN TRACT NO. 52584-01, IN THE COUNTY OF LOS ANGELES, STATE OF CALIFORNIA, AS PER MAP FILED IN BOOK 1329, PAGES 53 THROUGH 68, INCLUSIVE, OF MAPS, IN THE OFFICE OF THE COUNTY RECORDER OF SAID COUNTY.

PARCEL 3: (APN PORTIONS OF 2866-001-096)
PARCEL 5 OF CERTIFICATE OF COMPLIANCE FOR LOT LINE ADJUSTMENT NO. 101,923, IN THE COUNTY OF LOS ANGELES, STATE OF CALIFORNIA, WHICH RECORDED AUGUST 17, 2001 AS INSTRUMENT NO. 01-152850 OF OFFICIAL RECORDS.

EXCEPTING THERE FROM THAT PORTION LYING WITHIN TRACT NO. 52584-01, IN THE COUNTY OF LOS ANGELES, STATE OF CALIFORNIA, AS PER MAP FILED IN BOOK 1329, PAGES 53 THROUGH 68, INCLUSIVE, OF MAPS, IN THE OFFICE OF THE COUNTY RECORDER OF SAID COUNTY.

PARCEL 4: (APN 2866-001-015, 016, & PORTIONS OF 2866-001-096)
LOTS 2 AND 3 AND THE SOUTHWEST QUARTER OF THE NORTHEAST QUARTER OF SECTION 2, TOWNSHIP 4 NORTH, RANGE 17 WEST, SAN BERNARDINO BASE AND MERIDIAN, ACCORDING TO THE OFFICIAL PLAT OF SAID LAND FILED IN THE DISTRICT LAND OFFICE SEPTEMBER 6, 1880.
EXCEPTING THERE FROM THAT PORTION LYING WITHIN TRACT NO. 52584-01, IN THE COUNTY OF LOS ANGELES, STATE OF CALIFORNIA, AS PER MAP FILED IN BOOK 1329, PAGES 53 THROUGH 68, INCLUSIVE, OF MAPS, IN THE OFFICE OF THE COUNTY RECORDER OF SAID COUNTY.

PARCEL 5:
LOTS 1 TO 61, INCLUSIVE, OF TRACT NO. 52584-01, IN THE COUNTY OF LOS ANGELES, STATE OF CALIFORNIA, AS PER MAP FILED IN BOOK 1329, PAGES 53 THROUGH 68, INCLUSIVE, OF MAPS, IN THE OFFICE OF THE COUNTY RECORDER OF SAID COUNTY.

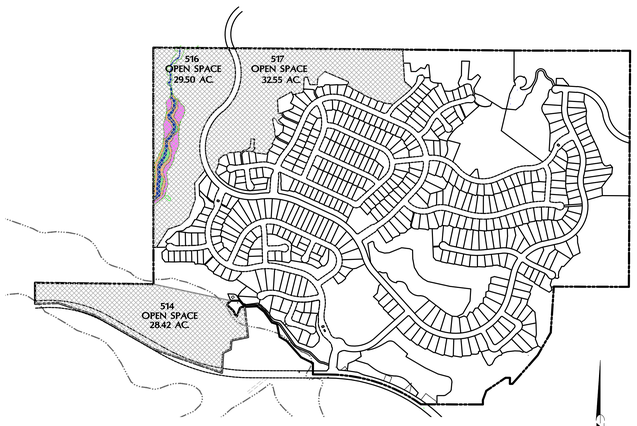

20 AC. LOT EXHIBIT
SCALE : 1"=600'

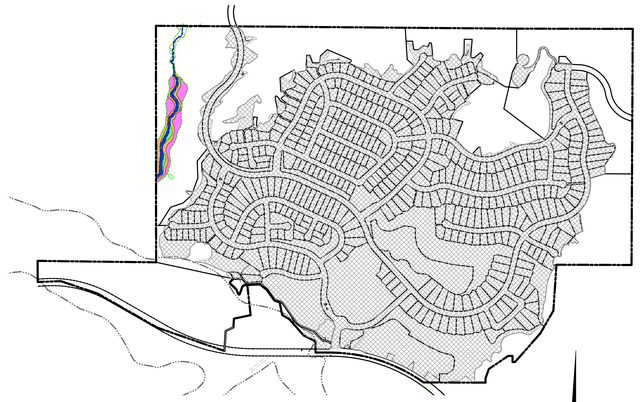

GRADING PHASE I
SCALE : 1"=600'

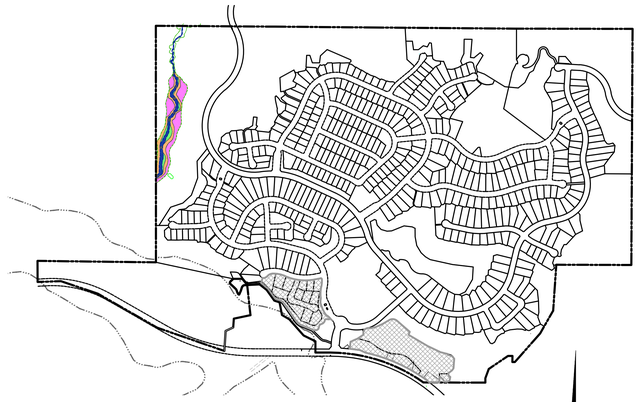

GRADING PHASE II
SCALE : 1"=600'

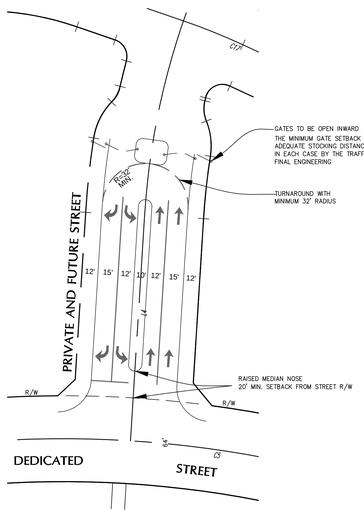

TYPICAL GATED ENTRANCE DETAIL
SCALE: 1" = 40'

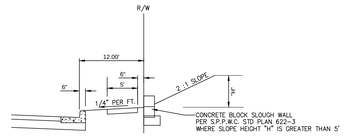

* TOP OF FILL SLOPE SHALL BE 3' FROM RIGHT OF WAY EXCEPT WHERE GRADING WORK HAS BEEN PREVIOUSLY CERTIFIED PER APPROVED GRADING PLAN GPC 04-0802-0002 AND THE DISTANCE MEASURES NOT LESS THAN 2 FEET

TYPICAL SLOUGH WALL
NOT TO SCALE

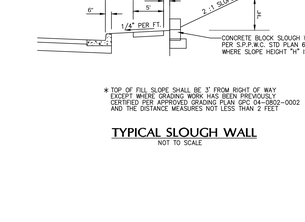

TYPICAL ROCK RIP-RAP LEVEE
NOT TO SCALE

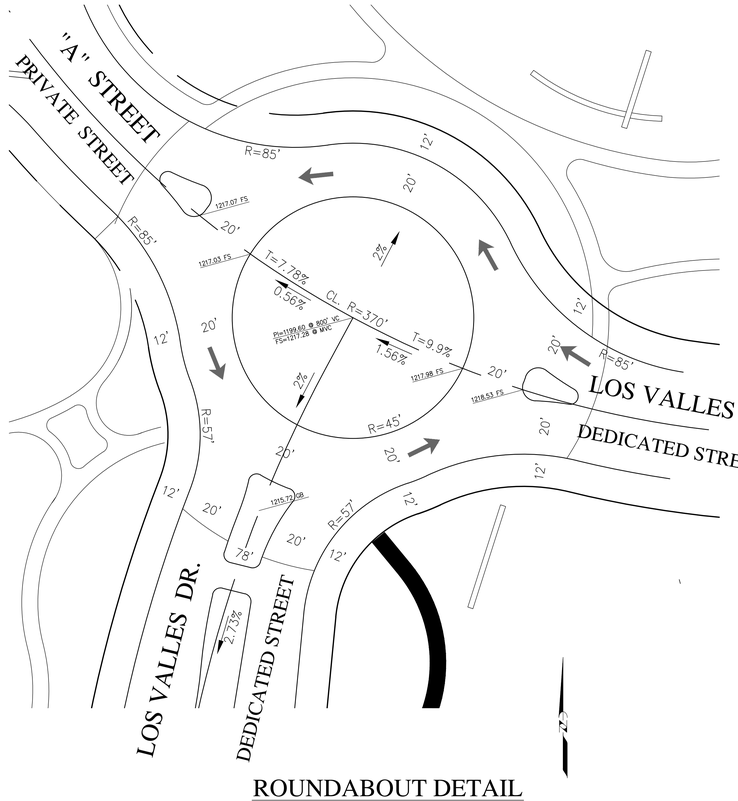

ROUNDABOUT DETAIL
SCALE : 1"=20'

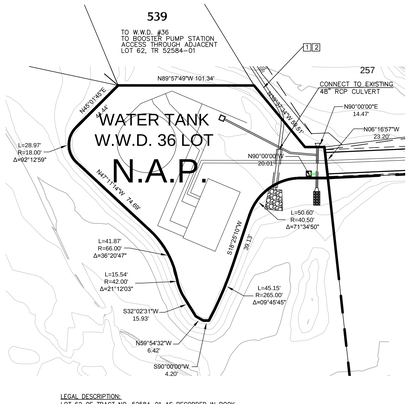

LEGAL DESCRIPTION:
LOT 62 OF TRACT NO. 52584-01 AS RECORDED IN BOOK 1329, PG. 53 THROUGH 68 INCLUSIVE OF MAPS.

DETAIL 1
SCALE: 1" = 40'

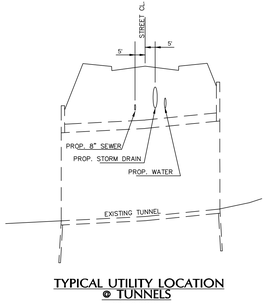

TYPICAL UTILITY LOCATION @ TUNNELS
NOT TO SCALE

OWNER/DEVELOPER:
SFI LOS VALLES LLC
10960 WILSHIRE BLVD., SUITE 1260 LOS ANGELES, CA 90024
PH: (310) 315-5566 FAX: (310) 315-7017

LEGAL DESCRIPTION:
SEE LEFT HEREON

C.U.P. EXHIBIT "A"
MAJOR LAND DIVISION
REVISED
VESTING TENTATIVE TRACT MAP NO.
052584
IN THE UNINCORPORATED TERRITORY OF COUNTY OF LOS ANGELES, STATE OF CALIFORNIA

DRAWN BY: LDC
CHECKED BY: C.G.
DESIGNED BY: LDC

DATE CHANGED	CHANGED BY	REVISION

REGISTERED PROFESSIONAL ENGINEER CHARLES A. GILMAN No. 54155 Exp. 12-31-15 CIVIL STATE OF CALIFORNIA

PREPARED BY:
LAND DESIGN CONSULTANTS, INC.
Land Planning, Civil Engineering, Surveying & Environmental Services
2700 Foothill Blvd., Suite 200, Pasadena, California 91107
Ph.: (626) 576-7000, Fax: (626) 578-7373
http://www.ldcla.com

Charles A. Gilman, R.C.E. No. C54155 — 12/08/2015 DATE

LDC

Project. No. 11018-001

SHEET 7 OF 7