OWNER:
SHAWN CHEN
713 W. DUARTE ROAD, UNIT G275
YORBA LINDA, CA 92886
PH: 626-893-9316

PREPARED BY:
HANK JONG, PE
EGL ASSOCIATES, INC.
11819 GOLDRING ROAD, UNIT A
ARCADIA, CA 91006
PH: 626-263-3588
FAX: 626-263-3599

EARTHWORK:
CUT.............3,450 CY
FILL.................100 CY
EPORT..........3,350 CY

SPECIAL NOTE:
THE QUANTITIES SHOWN HEREON ARE FOR PERMIT AND BONDING PURPOSES ONLY.
THE CONTRACTOR SHALL VERIFY QUANTITIES PRIOR TO START OF GRADING.

RECEIVED
DEPT OF REGIONAL PLANNING
TR073683 EXHIBIT PG 2
01 MAR 2016

MAJOR LAND DIVISION
VESTING TENTATIVE TRACT MAP NO. 073683

FOR CONDOMINIUM PURPOSES
LOCATED IN THE UNINCORPORATED TERRITORY OF THE COUNTY OF LOS ANGELES,
STATE OF CALIFORNIA
EXHIBIT MAP
BEING A SUBDIVISION OF LOT "A", OF TRACT NO. 10333, AS PER MAP RECORDED IN BOOK 158 PAGES 42 THROUGH 43 OF MAPS, IN THE OFFICE OF THE COUNTY RECORDER OF SAID COUNTY.

NOTES:

EXISTING ZONE: R-3
PROPOSED ZONE: R-3
NO. OF EX. LOTS: 1
NO OF PROP. LOT: 1
NO. OF EX. UNITS: 5 UNITS IN 1 APARTMENT BUILDING
EX. BUILDING AREA: 2,260 SF
NO OF PROP. UNITS: 11 CONDO UNITS IN 2 BUILDINGS
AREA OF LOT: 21,899 SF =0.50 ACRES GROSS (TO C.L. OF THE ROAD)
AREA OF LOT: 17,587 SF =0.40 ACRES NET
NO. OF STORIES: 2
NO. OF PARKINGS: 22 (RESIDENT) + 8 (GUEST) + 1 (DISABLED)
PROP.& EX. GENERAL PLAN LAND USE DESIGNATION:
CATEGORY 2 (MEDIUM DENSITY RESIDENTIAL)
SEWERAGE DISPOSAL: BY GRAVITY SEWER PIPES TO STREET MAIN.

BENCHMARK:

ELEV = 554.785'
L&T IN E CB 11M N/O BCR @ NE COR HUNTINGTON DR & MICHILLINDA AVE 61M N & 7.5M E/O C/L INT G 3230

SURVEY WAS CONDUCTED BY AL THELWELL, LS 6999 ON FEBRUARY 28, 2011

UTILITY SERVICES:

WATER – EAST PASADENA WATER CO.
SEWER – COUNTY OF LOS ANGELES SANTITATION DISTRICT
GAS – SOUTHERN CALIFORNIA GAS CO.
ELECTRICAL – SOUTHERN CALIFORNIA EDISON CO.
TELEPHONE – PACIFIC BELL TELEPHONE COMPANY
SCHOOL – CITY OF PASADENA SCHOOL DISTRICT
FIRE – COUNTY OF LOS ANGELES FIRE DEPARTMENT
SHERIFF –LOS ANGELES COUNTY SHERIFF

EARTHWORK

CUT............3,800 CY
FILL............50 CY
SPECIAL NOTE:
THE QUANTITIES SHOWN HEREON ARE FOR PERMIT AND BONDING PURPOSES ONLY. THE CONTRACTOR SHALL VERIFY QUANTITIES PRIOR TO START OF GRADING.

CONSTRUCTION NOTES:

1. PROPOSED PARKWAY DRAIN
2. PROPOSED 12"X12" CATCH BASIN
3. PROPOSED SEWER CLEANOUT (TYP.)
4. PROPOSED SEWER LATERAL (TYP.)
5. PROPOSED DRIVEWAY APPROACH
6. PROPOSED DRAIN PIPES
7. PROPOSED SUMP PUMP
8. PROPOSED DOMESTIC WATER METERS AND SERVICE LINE

EASEMENT

(A) EASEMENT FOR PUBLIC UTILITIES AS RECORDED IN BOOK 6686, PAGE 156 DEEDS. EXACT LOCATION AND EXTENT IS NOT DISCLOSED OF RECORD. EASEMENT TO REMAIN.

LEGAL DESCRIPTION:

THE LAND REFERRED TO HEREIN BELOW IS SITUATED IN THE COUNTY OF LOS ANGELES, STATE OF CALIFORNIA, AND IS DESCRIBED AS FOLLOWS:
LOT 3, BLOCK "C" OF MICHILLINDA TRACT, IN THE COUNTY OF LOS ANGELES, STATE OF CALIFORNIA, AS PER MAP RECORDED IN BOOK 21, PAGES 14 AND 15 OF MAPS, IN THE OFFICE OF THE COUNTY RECORDER OF SAID COUNTY.
EXCEPT THEREFROM THE SOUTHERLY 20 FEET OF SAID LAND AS CONDEMNED FOR WIDENING OF HUNTINGTON DRIVE, BY FINAL DECREE OF CONDEMNATION ENTERED IN CASE NO. 457956, SUPERIOR COURT, A CERTIFIED COPY THEREOF BEING RECORDED APRIL 28, 1948, AS INSTRUMENT NO. 2050, IN BOOK 27045, PAGE 5, OFFICIAL RECORDS.

LEGEND

(98.23)	EXISTING ELEVATION	EX	EXISTING
99.00	PROPOSED ELEVATION	TG	TOP GRATE
--(100)--	EXISTING CONTOUR	FS	FINISH SURFACE
	DRAINAGE PATTERN	TC	TOP OF CURB
	EXISTING STRUCTURE	FL	FLOW LINE
	PROPOSED STRUCTURE	FG	FINISH GRADE
	PROPOSED SEWER	FF	FINISH FLOOR
	PROPERTY LINE	HP	HIGH POINT
	PROPOSED PIPE	R/W	RIGHT OF WAY
	FIRE HYDRANT	WM	EX. WATER METER
	CATCH BASIN		SUMP PUMP
	PROPOSED FIRELANE		PROPOSED PRIVATE DRIVEWAY/FIRELANE

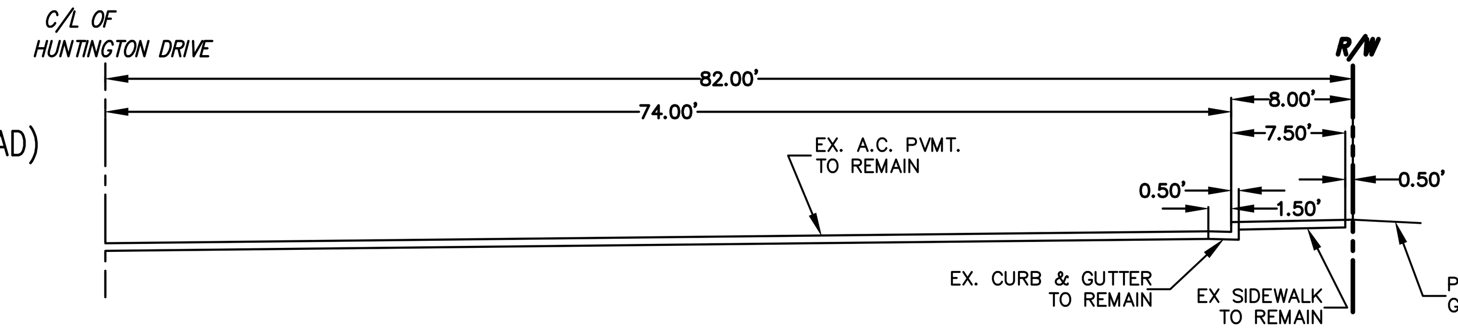

HUNTINGTON DRIVE (NORTH HALF)
TYP. SECTION
SCALE: 1"=10'

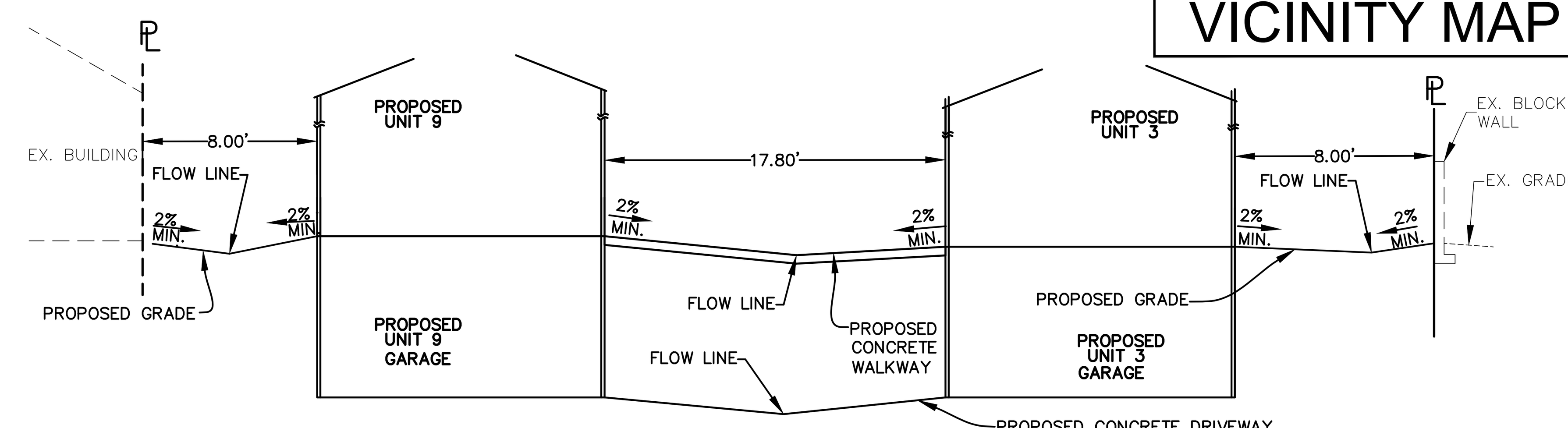

CROSS SECTION A–A
NOT TO SCALE

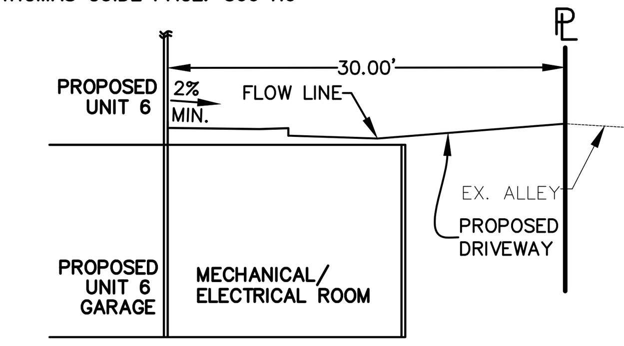

CROSS SECTION B–B
NOT TO SCALE

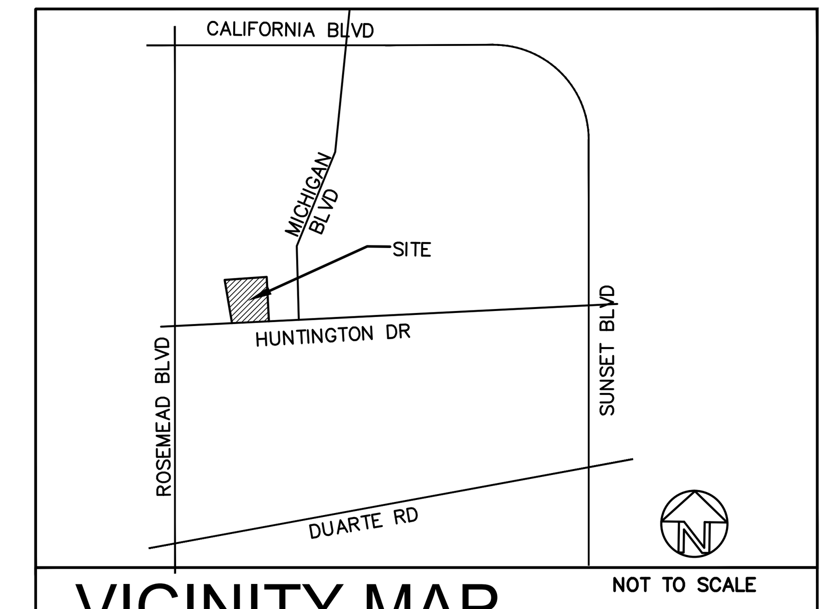

VICINITY MAP
THOMAS GUIDE PAGE: 566 H6

NORTH
SCALE : 1"=10'

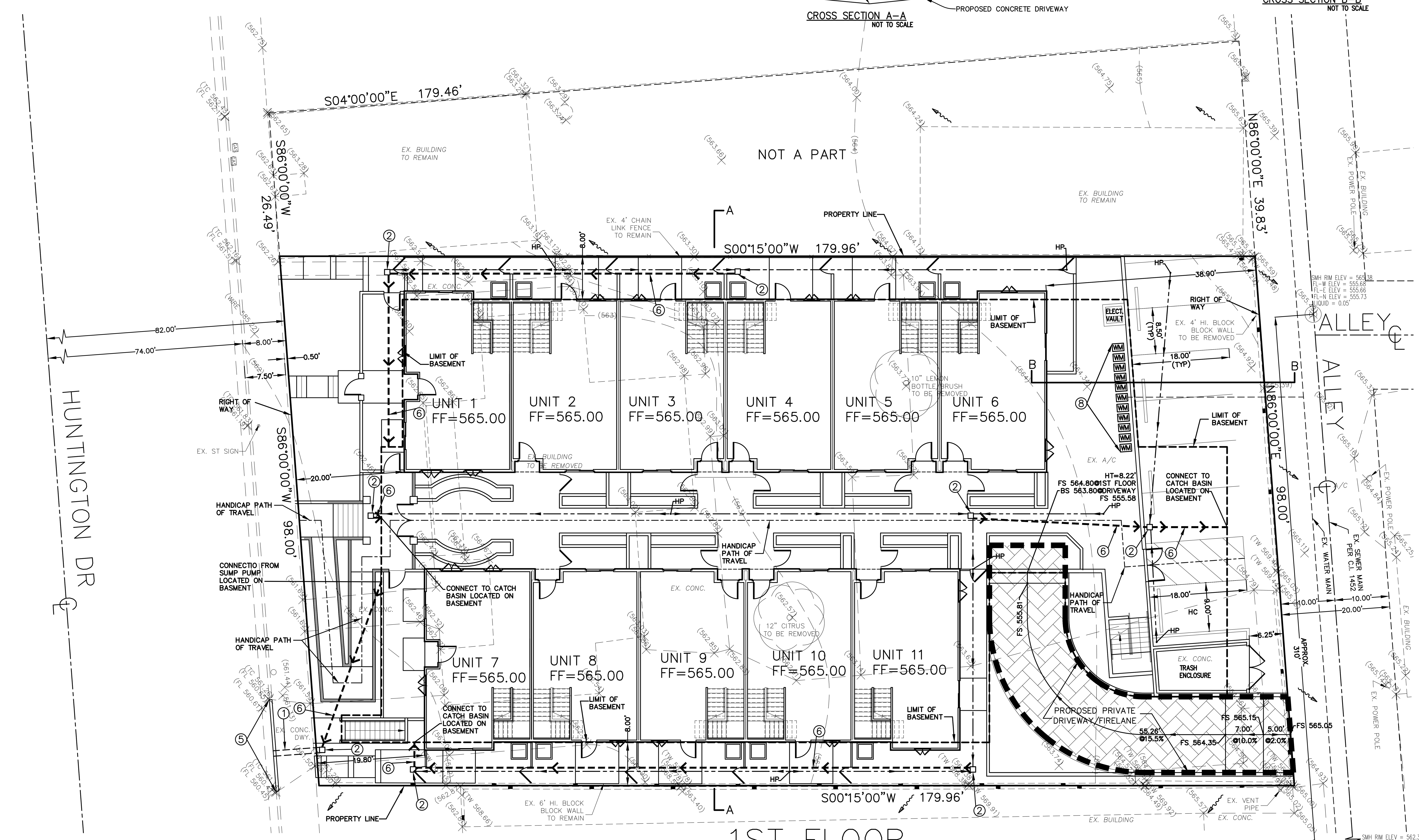

1ST FLOOR

PROJECT LOCATION:
11 UNITS CONDOMINIUM
3723 HUNTINGTON DRIVE
PASADENA, COUNTY OF LOS ANGELES
APN: 5378-011-004

These drawings and the accompanying specifications are exclusive property of EGL Associates, Inc. Written permission is required by EGL to re-use or reproduce these drawings and specifications by any method in whole or in part. A written consent is required if the drawings are to be used by other than EGL Associates, Inc. Any questionsarised from these drawings shouldbe directed to EGL Associates in a written format.

REVISIONS BY

RELEASED DATE

PREPARED FOR:
SHAWN CHEN
713 W. DUARTE ROAD,
UNIT G275
ARCADIA, CA 91007

EGL Associates, Inc.
11819 GOLDRING ROAD, Unit A
ARCADIA, CA 91006
Tel: (626)263-3588
Fax: (562)263-3599

REGISTERED PROFESSIONAL ENGINEER
HANK HSING-LIAN JONG
45846
Exp. 12/31/16
CIVIL
STATE OF CALIFORNIA

DRAWN	EM
CHECKED	HJ
DATE	02/26/2016
JOB NO.	14-203-047
SCALE	1"=10'
FILE	

DRAWING 2 of 3

T-2

RECEIVED
DEPT OF REGIONAL PLANNING
TR073683 EXHIBIT PG 3
01 MAR 2016

MAJOR LAND DIVISION
VESTING TENTATIVE TRACT MAP NO. 073683

FOR CONDOMINIUM PURPOSES
LOCATED IN THE UNINCORPORATED TERRITORY OF THE COUNTY OF LOS ANGELES,
STATE OF CALIFORNIA
EXHIBIT MAP
BEING A SUBDIVISION OF LOT "A", OF TRACT NO. 10333, AS PER MAP RECORDED IN BOOK 158 PAGES 42 THROUGH 43 OF MAPS, IN THE OFFICE OF THE COUNTY RECORDER OF SAID COUNTY.

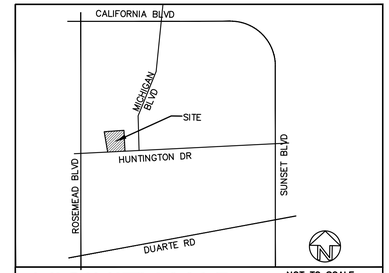

VICINITY MAP

THOMAS GUIDE PAGE: 566 H6

NORTH

SCALE : 1"=10'

CONSTRUCTION NOTES:

1. PROPOSED PARKWAY DRAIN
2. PROPOSED 12"X12" CATCH BASIN
3. PROPOSED SEWER CLEANOUT (TYP.)
4. PROPOSED SEWER LATERAL (TYP.)
5. PROPOSED CURB & GUTTER
6. PROPOSED DRAIN PIPES
7. PROPOSED SUMP PUMP
8. PROPOSED DOMESTIC WATER METERS AND SERVICE LINE

EASEMENT

(A) EASEMENT FOR PUBLIC UTILITIES AS RECORDED IN BOOK 6686, PAGE 156 DEEDS. EXACT LOCATION AND EXTENT IS NOT DISCLOSED OF RECORD. EASEMENT TO REMAIN.

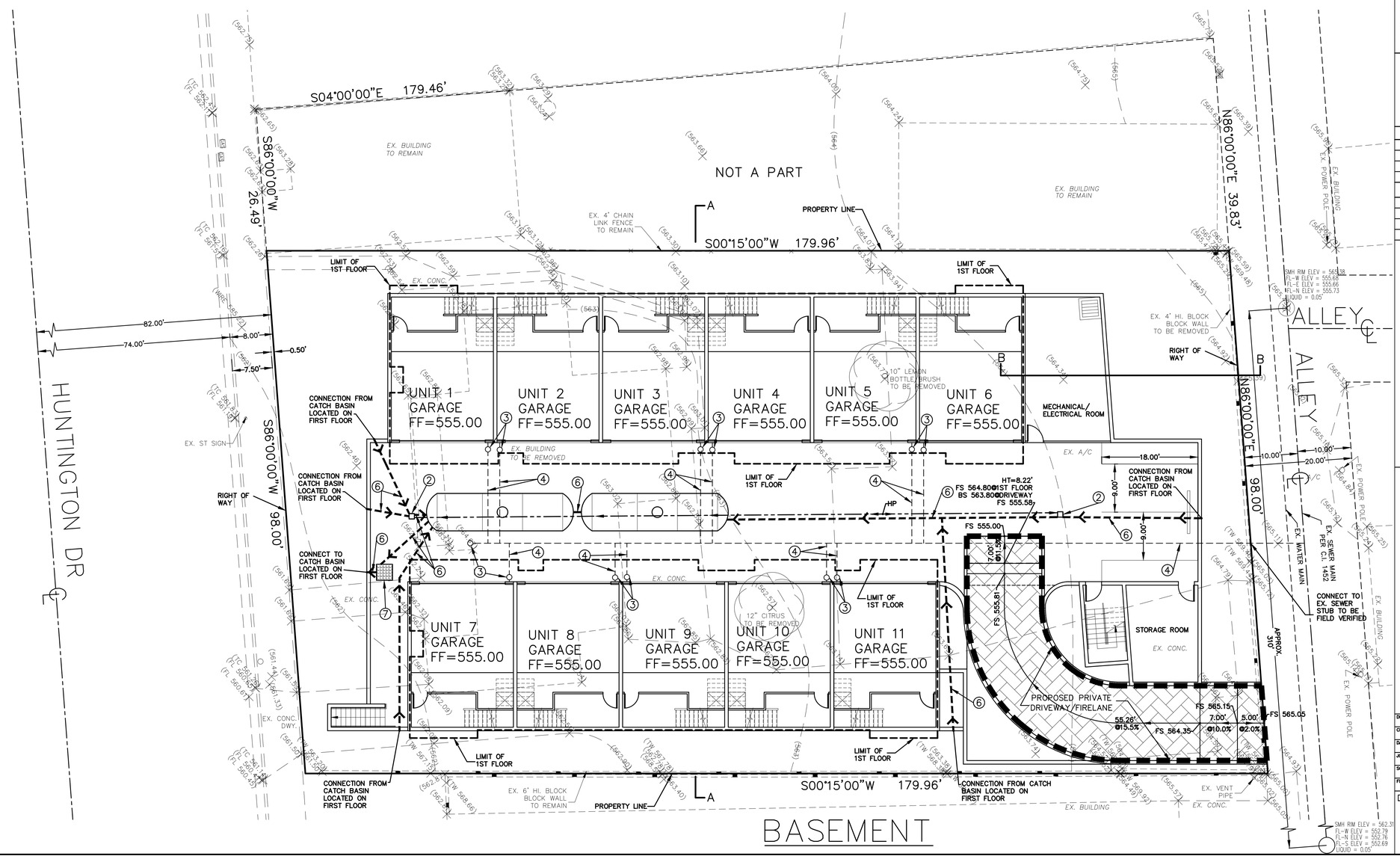

BASEMENT

LEGEND

(98.23).....EXISTING ELEVATION	EX .....EXISTING
99.00.....PROPOSED ELEVATION	TG .....TOP GRATE
--(100)-- EXISTING CONTOUR	FS .....FINISH SURFACE
.....DRAINAGE PATTERN	TC.....TOP OF CURB
.....EXISTING STRUCTURE	FL.....FLOW LINE
.....PROPOSED STRUCTURE	FG.....FINISH GRADE
.....PROPOSED SEWER	FF.....FINISH FLOOR
.....PROPERTY LINE	HP.....HIGH POINT
.....PROPOSED PIPE	R/W.....RIGHT OF WAY
...FIRE HYDRANT	.....EX. WATER METER
...CATCH BASIN	.....SUMP PUMP
....PROPOSED FIRELANE	....PROPOSED PRIVATE DRIVEWAY/FIRELANE

PROJECT LOCATION:

11 UNITS CONDOMINIUM
3723 HUNTINGTON DRIVE
PASADENA, COUNTY OF LOS ANGELES
APN: 5378-011-004

These drawings and the accompanying specifications are exclusive property of EGL Associates, Inc. Written permission is required by EGL to re-use or reproduce these drawings and specifications by any method in whole or in part. Also, a written consent is required if the drawings are to be used by other than EGL Associates, Inc. Any questions/ideas from these drawings should be directed to EGL Associates in a written format.

REVISIONS	BY

RELEASED	DATE

PREPARED FOR:

SHAWN CHEN
713 W. DUARTE ROAD, UNIT G275
ARCADIA, CA 91007

EGL Associates, Inc.
11819 GOLDRING ROAD, Unit A
ARCADIA, CA 91006
Tel: (626)263-3588
Fax: (562)263-3599

REGISTERED PROFESSIONAL ENGINEER
HANK HSING-LI TAO (ZING)
45846
Exp.12/31/16
CIVIL
STATE OF CALIFORNIA

DRAWN	EM
CHECKED	HJ
DATE	02/26/2016
JOB NO.	14-203-047
SCALE	1"=10'
FILE	

DRAWING 3 of 3

T-3