RECEIVED
DEPT OF REGIONAL
PLANNING
TR072771 TENTATIVE
DATE: 05-14-14

MAJOR LAND DIVISION
VESTING TENTATIVE TRACT MAP NO. 72771
FOR CONDOMINIUMS CONVERSION
LOCATED IN THE UNINCORPORATED TERRITORY OF THE COUNTY OF LOS ANGELES, STATE OF CALIFORNIA

REFERENCES:

R2: DEED RECORDED

BASIS OF BEARING: THE BEARING OF SOUTH 89°59'56" WEST OF THE CENTERLINE OF 109TH STREET, AS SHOWN ON THE P.W.F.B. 3935 PAGE 65 IN THE COUNTY RECORDER'S OFFICE OF LOS ANGELES, WAS TAKEN AS THE BASIS OF BEARING OF THIS SURVEY.

BENCH MARK: BM # 10967. LACE MON 300 MM (1FT) E/O E CF 2.4 M (8 FT) N/O BCR @ NE COR LA CIENEGA BLVD & LENNOX BLVD. QUAD HAWTHORNE (2005). ELEVATION 84.342

LEGAL DESCRIPTION:
THOSE PORTIONS OF LOT 398 OF TRACT NO. 286, AS SHOWN ON MAP RECORDED IN BOOK 14, PAGE 94 AND 95 OF MAPS, IN THE OFFICE OF THE COUNTY RECORDER OF SAID COUNTY, ACQUIRED BY THE STATE OF CALIFORNIA BY DEED (STATE PARCEL 54063) RECORDED SEPTEMBER 8, 1971 IN BOOK D5184 PAGE 656, BY DEED (STATE PARCEL 54064) RECORDED JANUARY 14, 1972 IN BOOK D5319, PAGE 690 AND BY DEED (STATE PARCEL 60843) RECORDED JUNE 25, 1971, IN BOOK D5101, PAGE 641, ALL OF OFFICIAL RECORDS IN SAID OFFICE, AND THOSE PORTIONS OF LOT 399 OF SAID TRACT NO. 286, ACQUIRED BY THE STATE OF CALIFORNIA BY DEED (STATE PARCEL 54065) RECORDED JUNE 23, 1971 IN BOOK D5098, PAGE 394, BY DEED (STATE PARCEL 54066) RECORDED JANUARY 18, 1983 AS DOCUMENT NUMBER 83-65421 AND BY DEED (STATE PARCEL 54067) RECORDED OCTOBER 18, 1971 IN BOOK D5226, PAGE 227, ALL OF SAID OFFICIAL RECORDS, DESCRIBED AS A WHOLE AS FOLLOWS:

BEGINNING AT SOUTHEASTERLY CORNER OF THE THIRD ABOVE-MENTIONED ACQUIRED LAND (STATE PARCEL 60843), THENCE ALONG THE SOUTHERLY LINE OF SAID LOT 398, S 89° 56' 00" W, 14.12 FEET TO A TANGENT CURVE, CONCAVE NORTHERLY AND HAVING A RADIUS OF 95.00 FEET; THENCE WESTERLY ALONG SAID CURVE THROUGH AN ANGLE OF 21° 44' 17", AN ARC DISTANCE OF 36.04 FEET; THENCE N 68° 19' 43" W, 16.50 FEET TO A TANGENT CURVE, CONCAVE SOUTHERLY AND HAVING A RADIUS OF 30.00 FEET; THENCE WESTERLY ALONG LAST SAID CURVE THROUGH AN ANGLE OF 81° 44' 18", AN ARC DISTANCE OF 42.80 FEET TO SAID SOUTHERLY LINE; THENCE ALONG SAID SOUTHERLY LINE S 89° 56' 00" W, 4.01 FEET; THENCE N 00° 01' 00" W, 257.80 FEET TO A POINT IN THE NORTHERLY LINE OF SAID LOT 399 DISTANT ALONG SAID NORTHERLY LINE S 89° 55' 39" W, 12.31 FEET FROM THE SOUTHEASTERLY CORNER OF LOT 6 OF TRACT NO. 7394, AS SHOWN ON MAP RECORDED IN BOOK 73, PAGES 87 AND 88 OF MAPS IN SAID OFFICE; THENCE ALONG SAID NORTHERLY LINE N 89° 55' 39" E, 105.73 FEET TO THE EASTERLY LINE OF SIXTH ABOVE-MENTIONED ACQUIRED LAND (STATE PARCEL 54067); THENCE ALONG SAID EASTERLY LINE AND THE EASTERLY LINES OF FIFTH ABOVE-MENTIONED (STATE PARCEL 54066) ACQUIRED LAND, FOURTH ABOVE-MENTIONED (STATE PARCEL 54065) ACQUIRED LAND, SECOND ABOVE-MENTIONED (STATE PARCEL 54064) ACQUIRED LAND AND THIRD ABOVE-MENTIONED (STATE PARCEL 60843) ACQUIRED LAND, S 00° 00' 59" E, 257.80 FEET TO THE POINT OF BEGINNING.

LEGEND:

A = PROPOSED TRACT BOUNDARY ESTABLISHED BY RECORD DATA PER R2.

B = RECONSTRUCT SIDE WALK, AND CURB AND GUTTER PER SPPWC 100-1.

C = CONSTRUCT NEW DRIVEWAY TYPE B.

D = FURNISH AND PLANT 24" BOX TREE, PER STD PLAN 520-4 CASE 1, CERCIS OCCIDENTALIS, WESTERN REDBUD, DOUBLE STAKING PER STD PLAN 518-3.

INDICATES EXISTING STREET GRADE DIRECTION.

INDICATES EXISTING SEWER.

INDICATES EXISTING WATER LINE

INDICATES THE BOUNDARY OF THE PARCEL BEING SUBDIVIDED BY THIS MAP.

(81) EXISTING SURFACE ELEVATION

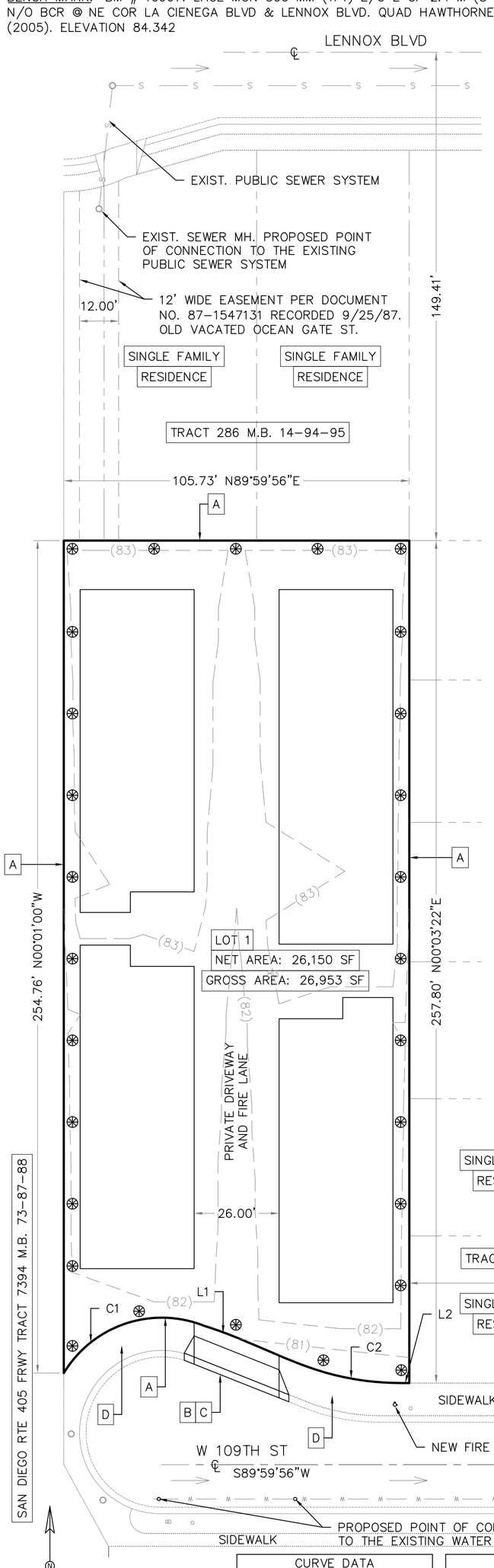

SCALE: 1:25

CURVE DATA			
	R	L	Δ
C1	35.0	80.7	132°06'36"
C2	85.0	21.7	14°37'39"

LINE DATA		
	L	BEARING
L1	31.0	N68°15'45"W
L2	2.5	S89°59'56"W

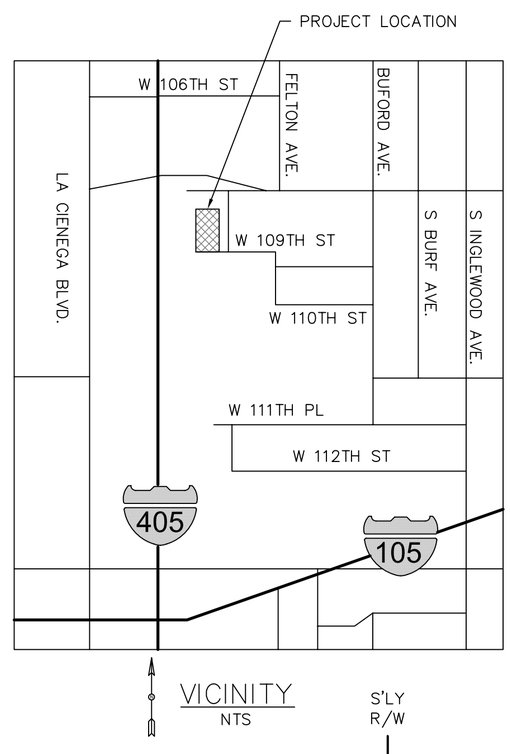

VICINITY
NTS

NOTES:
LOT NO. 1 OF THIS MAP IS APPROVED AS A CONDOMINIUM PROJECT FOR A TOTAL OF 17 CONDOMINIUMS, WHEREBY THE OWNERS OF THE UNITS OF AIR SPACE WILL HOLD AS UNDIVIDED INTEREST IN THE COMMON AREAS WHICH WILL, IN TURN, PROVIDE NECESSARY ACCESS AND UTILITY EASEMENT FOR THE UNITS.

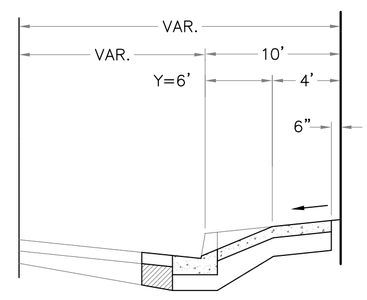

STANDARD PLAN:
110-2 DRIVEWAY APPROACHES

DRIVEWAY DETAIL
NTS

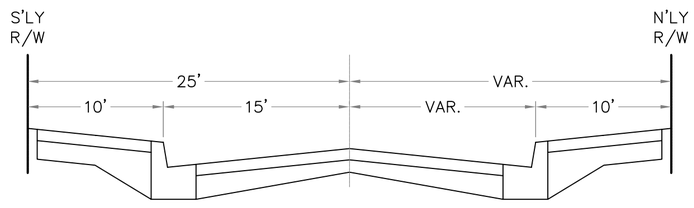

109TH STREET
NTS

INT. - FD LG, B.S.W. & T. FL. BY INT. OF ℄'s (HELD ℄ N & S BETWEEN LENNOX BLVD. & IMPERIAL HWY PER RD.F.B. 0817-226, 227. ALSO, SEE STATE F.M. 20274-2

REGISTERED PROFESSIONAL ENGINEER
No.
Exp.
CIVIL
STATE OF CALIFORNIA

PROJECT ENGINEER DATE

3950 W. IMPERIAL HWY.
INGLEWOOD, CA 90303

VESTING TENTATIVE TRACT MAP NO. 72771

COUNTY OF LOS ANGELES DEPARTMENT OF PUBLIC WORKS

17 NEW CONDOMINIUMS
5053 W 109TH STREET
LENNOX, CA 90304

RECORDED OWNER: ARIA SHAFEE
221 AVENUE B
REDONDO BEACH, CA 90277