RECEIVED
DEPT OF REGIONAL PLANNING
TR072771 EXHIBIT
DATE: 05-14-14

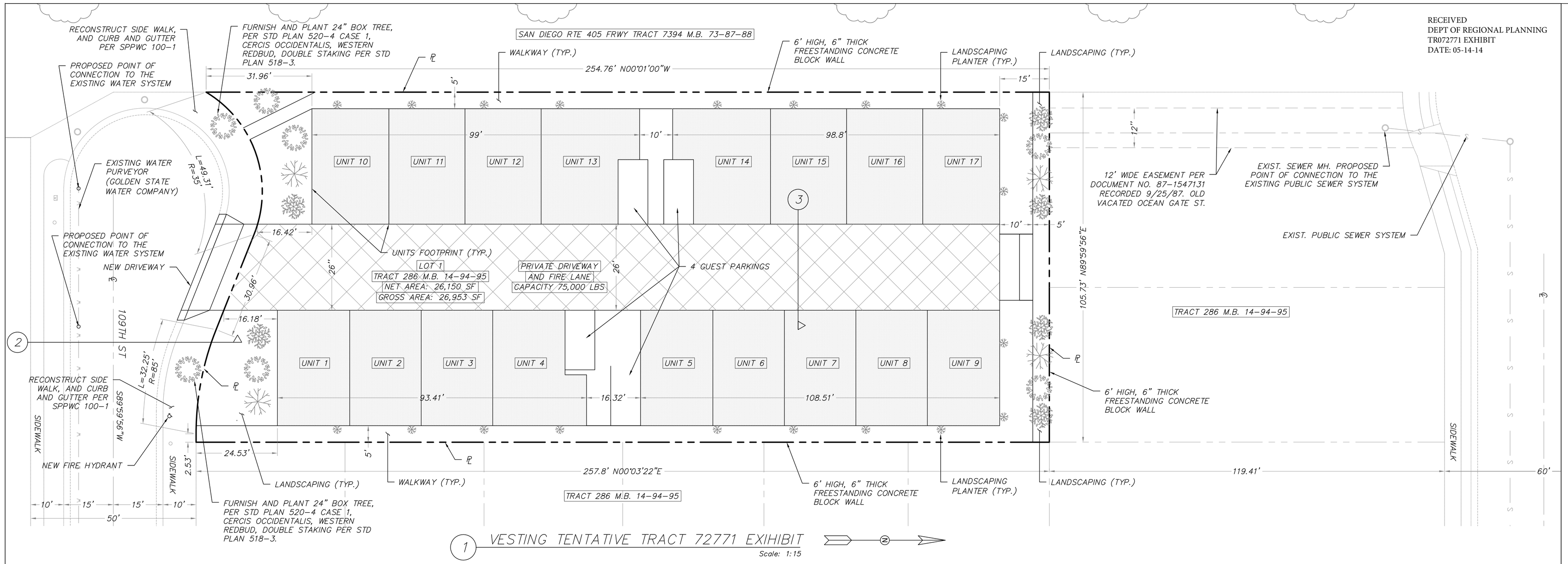

1 VESTING TENTATIVE TRACT 72771 EXIHIBIT

Scale: 1:15

FIRE DEPARTMENT NOTES

1. SECURITY GATES SHALL BE PROVIDED WITH AN APPROVED MEANS OF EMERGENCY OPERATION, AND SHALL BE MAINTAINED OPERATIONAL AT ALL TIMES. ELECTRIC GATES OPERATORS, WHERE PROVIDED, SHALL BE LISTED IN ACCORDANCE WITH UL 325. GATES INTENDED FOR AUTOMATIC OPERATION SHALL BE DESIGNED, CONSTRUCTED AND INSTALLED TO COMPLY WITH THE REQUIREMENTS OF ASTM F220. FIRE CODE 503.6.
2. PROVIDE APPROVED SIGNS OR OTHER APPROVED NOTICES OR MARKINGS THAT INCLUDE THE WORDS NO PARKING – FIRE LANE. SIGNS SHALL BE PROVIDED FOR FIRE APPARATUS ACCESS ROADS, TO CLEARLY INDICATE THE ENTRANCE TO SUCH ROAD, OR PROHIBIT THE OBSTRUCTION THEREOF, AS REQUIRED BY THE FIRE INSPECTOR. FIRE CODE 503.3.
3. FIRE DEPARTMENT VEHICULAR ACCESS ROADS SHALL BE HARD SCAPE ALL WEATHER ACCESS IN ACCORDANCE WITH THE DEPARTMENT'S ALL WEATHER ACCESS REQUIREMENTS. FIRE CODE 503.2.3.
4. FIRE DEPARTMENT DEPARTMENT VEHICULAR ACCESS ROADS MUST BE INSTALLED AND MAINTAINED IN A SERVICEABLE MANNER PRIOR TO AND DURING THE TIME OF CONSTRUCTION. FIRE CODE 501.4.
5. A KEY BOX SHALL BE PROVIDED AND MAINTAINED AR ALL GATES, IN ACCORDANCE WITH FIRE CODE 506, AND AS SET FOURTH IN THE COUNTY OF LOS ANGELES FIRE DEPARTMENT REGULATION 5.
6. APPROVED BUILDING ADDRESS NUMBERS, BUILDING NUMBERS OR APPROVED BUILDING IDENTIFICATION SHALL BE PROVIDED AND MAINTAINED SO AS TO BE PLAINLY VISIBLE AND LEGIBLE FROM THE STREET FRONTING OF THE PROPERTY. THE NUMBERS SHALL CONTRAST WITH THEIR BACKGROUND, BE ARABIC NUMERALS OR ALPHABET LETTERS, AND BE A MINIMUM 4 INCHES HIGH WITH A MINIMUM STROKE WIDTH OF 0.5 INCH. FIRE CODE 505.1.
7. ALL FIRE HYDRANTS SHALL MEASURE 6"x4"x2-1/2", BRASS OR BRONZE, CONFORMING TO AMERICAN WATER WORKS ASSOCIATION STANDARD C503, OR APPROVED EQUAL, AND SHALL BE INSTALLED IN COMPLIANCE WITH THE COUNTY OF LOS ANGELES FIRE DEPARTMENT REGULATION 8. FIRE CODE 507.5 AND REGULATION 8.
8. ALL PUBLIC FIRE HYDRANTS SHALL BE INSTALLED, TESTED AND ACCEPTED PRIOR TO BEGINNING CONSTRUCTION. FIRE CODE 501.4.
9. PLANS SHOWING UNDERGROUND PIPING, FIRE DEPARTMENT CONNECTION, OR PRIVATE ON-SITE FIRE HYDRANTS SHALL BE SUBMITTED TO THE SPRINKLER PLAN CHECK UNIT FOR REVIEW AND APPROVAL PRIOR TO INSTALLATION. FIRE CODE 901.2, COUNTY OF LOS ANGELES FIRE DEPARTMENT REGULATION 7.
10. THE INSPECTION, HYDROSTATIC TEST AND FLUSHING OF THE UNDERGROUND FIRE PROTECTION PIPING SHALL BE WITNESSED BY AN AUTHORIZED FIRE DEPARTMENT REPRESENTATIVE. NO UNDERGROUND PIPING OR THRUST BLOCKS SHALL BE COVERED WITH EARTH OR HIDDEN FROM VIEW UNTIL THE FIRE DEPARTMENT REPRESENTATIVE HAS BEEN NOTIFIED AND GIVEN NOT LESS THAN 48 HOURS IN WHICH TO INSPECT SUCH INSTALLATIONS. FIRE CODE 901.5, COUNTY OF LOS ANGELES FIRE DEPARTMENT REGULATION 7.
11. ELEVATORS, ESCALATORS AND MOVING WALKS SHALL COMPLY WITH THE REQUIREMENTS SET FOURTH IN BUILDING CODE CHAPTER 30.
12. ALL BUILDINGS AND STRUCTURES FOUR OR MORE STORIES ABOVE OF FOUR OR MORE STORIES BELOW GRADE PLANE SHALL HAVE AT LEAST ONE ELEVATOR MEETING THE STRETCHER REQUIREMENTS AND SHALL BE PROVIDED FOR FIRE DEPARTMENT EMERGENCY ACCESS TO ALL FLOORS. BUILDING CODE 3002.4.
13. PROVIDE AN APPROVED CLASS I STANDPIPE SYSTEM AS SET FORTH BY BUILDING CODE AND FIRE CODE 905. SUBMIT PLANS TO THE SPRINKLER PLAN CHECK UNIT FOR REVIEW AND APPROVAL PRIOR TO INSTALLATION.
14. NO POINT WITHIN A BUILDING REQUIRING STANDPIPES SHALL BE MORE THAN 130 FEET TRAVEL DISTANCE FROM A STANDPIPE OUTLET CONNECTION. COUNTY FIRE CODE 905.2.1.3.
15. THE MEANS OF EGRESS AND EXIT DISCHARGE SHALL BE ILLUMINATED AT ANY TIME THE BUILDING IS OCCUPIED WITH A LIGHT INTENSITY OF NOT LESS THAN 1 FOOT-CANDLE AT THE WALKING SURFACE LEVEL. BUILDING CODE 1006.2.
16. THE POWER SUPPLY FOR MEANS OF EGRESS ILLUMINATION SHALL NORMALLY BE PROVIDED BY THE PREMISES' ELECTRICAL SUPPLY. IN THE EVENT OF POWER SUPPLY FAILURE, THE EMERGENCY POWER SYSTEM SHALL PROVIDE POWER FOR A DURATION OF NOT LESS THAN 90 MINUTES AND SHALL CONSIST OF STORAGE BATTERIES, UNIT EQUIPMENT OR AN ON-SITE GENERATOR. BUILDING CODE 1006.3
17. THE MINIMUM WIDTH OF EACH DOOR OPENING SHALL BE SUFFICIENT FOR THE OCCUPANT LOAD THEREOF AND SHALL PROVIDE A CLEAR WIDTH OF NOT LESS THAN 32 INCHES. THE HEIGHT OF DOORS SHALL NOT BE LESS THAN 80 INCHES. BUILDING CODE 1008.1.1.
18. EGRESS DOORS SHALL BE READILY OPENABLE FROM THE EGRESS SIDE WITHOUT THE USE OF A KEY OR ANY SPECIAL KNOWLEDGE OR EFFORT. BUILDING CODE 1008.1.9.
19. PORTABLE FIRE EXTINGUISHERS SHALL BE INSTALLED IN LOCATIONS AS REQUIRED BY FIRE CODE 906.
20. DUMPSTERS AND CONTAINERS WITH AN INDIVIDUAL CAPACITY OF 1.5 CUBIC YARDS OR MORE SHALL NOT BE STORED IN BUILDING OR PLACED WITHIN 5 FEET OF COMBUSTIBLE WALLS, OPENINGS OR COMBUSTIBLE ROOF EAVES, UNLESS AREAS CONTAINING DUMPSTERS OR CONTAINERS ARE PROTECTED BY AN APPROVED AUTOMATIC FIRE SPRINKLER SYSTEM. FIRE CODE 304.3.3.
21. AN AUTOMATIC SPRINKLER SYSTEM INSTALLED IN ACCORDANCE WITH SECTION 903.3 SHALL BE PROVIDED THROUGHOUT ALL BUILDINGS WITH A GROUP R FIRE AREA. BUILDING CODE/FIRE CODE 903.2.8. PLANS SHALL BE SUBMITTED TO THE SPRINKLER PLAN CHECK UNIT FOR REVIEW AND APPROVAL PRIOR TO INSTALLATION. TYPE OF FIRE SPRINKLER SYSTEM: 903.3.1 OR 903.3.1.2
22. A MANUAL FIRE ALARM SYSTEM THAT ACTIVATES THE OCCUPANT NOTIFICATION SYSTEM IN ACCORDANCE WITH SECTION 907.5 SHALL BE INSTALLED IN GROUP R-2 OCCUPANCIES WHERE:
    22.1. ANY DWELLING UNIT OR SLEEPING UNIT IS LOCATED THREE OR MORE STORIES ABOVE THE LOWEST LEVEL OF EXIT DISCHARGE. BUILDING CODE/FIRE CODE 907.2.9.1.
23. WHERE MORE THAN ONE SMOKE ALARM IS REQUIRED TO BE INSTALLED WITHIN AN INDIVIDUAL DWELLING UNIT OR SLEEPING UNIT IN GROUP R-1, R-2, R-3, R-3.1 OR R-4, THE SMOKE ALARMS SHALL BE INTERCONNECTED IN SUCH A MANNER THAT THE ACTIVATION OF ONE ALARM WILL ACTIVATE ALL OF THE ALARMS IN THE INDIVIDUAL UNIT. BUILDING CODE/FIRE CODE 907.2.11.3.

GENERAL NOTES

1. PROJECT ADDRESS: 5053 W 109TH ST, LENNOX CA 90304
3. LOT GROSS AREA: 26,593 SF
4. 1,129 SF (VAR. WIDTH) STREET DEDICATION (REQUIRED BY LACDPW)
5. LOT NET AREA: 26,150 SF (0.60 ACRES)
6. ALLOWABLE DENSITY: 17 UNITS.
7. APN NO.: 4039-008-032.
8. UNITS NO. 3 AND 4 SHALL BE RESTRICTED BY COVENANT TO QUALIFYING VERY LOW INCOME HOUSEHOLDS.
9. NO. OF STORIES: 3
10. NO. OF UNITS: 17

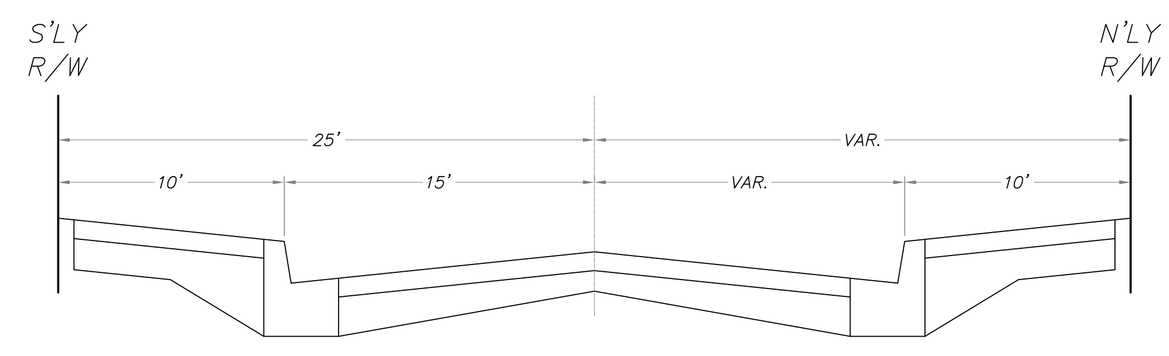

2 109TH STREET CROSS SECTION

Scale: NTS

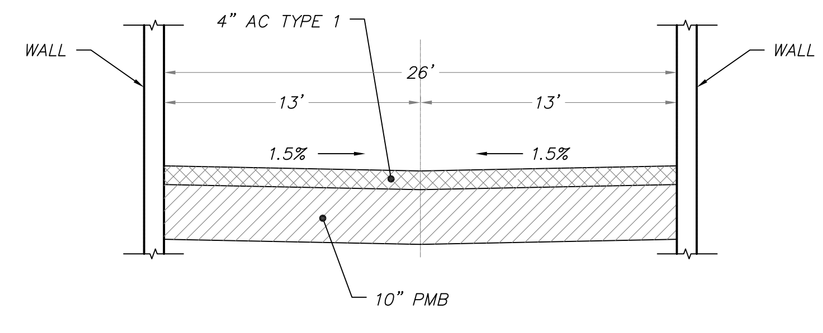

3 DRIVEWAY CROSS SECTION

Scale: NTS

REVISION	DATE

COOKE & ASSOCIATES
3950 W IMPERIAL HWY
INGLEWOOD, CA 90303
(310) 722-2707

PROJECT ADDRESS
5053 W 109TH ST
LENNOX, CA 90304

PROJECT NO. 2011-4

CHECKED MP

DRAWN BP

DATE 11/15/13

TITLE VESTING TENTATIVE TRACT 72771 EXHIBIT

SHEET 1.0