TENTATIVE TRACT NO. 072684
(FOR CONDOMINIUM PURPOSES)
EXHIBIT "A"
LOCATED IN THE UNINCORPORATE TERRITORY OF THE COUNTY OF LOS ANGELES, STATE OF CALIFORNIA

CURVE TABLE			
CURVE	LENGTH	RADIUS	DELTA
C1	63.04'	392.00'	09°12'49"
C2	184.73'	303.00'	34°55'50"
C3	39.24'	50.00'	44°57'39"
C4	37.12'	50.00'	42°32'01"
C5	14.91'	13.00'	65°41'51"
C6	22.05'	22.00'	57°25'28"
C7	11.84'	39.50'	17°10'38"
C8	23.56'	15.00'	90°00'00"
C9	7.98'	13.00'	35°10'48"
C10	29.52'	32.00'	52°51'02"
C11	31.13'	33.00'	54°02'40"

NOTE :
THE DEVELOPER/ENGINEER ACKNOWLEDGE THAT THE SIZE OF THE WATER QUALITY AND/OR FLOOD CONTROL BASIN WILL BE REVIEWED AT THE IMPROVEMENT PLAN STAGE. SIGNIFICANT CHANGE OF THE SIZE OF THE BASIN FROM WHAT IS SHOWN ON THE TENTATIVE MAP MAY RESULT IN REVISING PLANNING DOCUMENTS BY THE DEPARTMENT OF REGIONAL PLANNING.

NOTE :
ALL EXISTING STRUCTURES TO BE REMOVED

NOTE :
ALL DRAINAGE DEVICES WILL BE MAINTAINED BY PROPERTY OWNER

NOTE :
THE STRUCTURAL SECTION FOR FIRE LANES WILL BE CAPABLE TO SUBJECT LIVE LOAD OF 75,000 LBS

LOT 1:
GROSS AREA = 1.21 Acres
NET AREA = 1.19 Acres

LOT 2:
GROSS AREA = 2.46 Acres
NET AREA = 2.43 Acres

RECEIVED
DEPT OF REGIONAL PLANNING
TR072684 EXHIBIT
DATE: 04 SEP 2014

LINE TABLE		
LINE	LENGTH	BEARING
L1	15.97'	N64°34'09"E
L2	4.04'	S49°44'00"E
L3	21.93'	S40°16'00"W

PARKING SUMMARY

PARKING SUMMARY PER LOT					
LOT	NO. OF	GARAGE	SURFACE PARKING SPACES		HANDICAP SPACES (REQUIRED/ PROVIDED)
NUMBER	UNITS	SPACES	PROVIDED	REQUIRED	
1	20	40	3	4	1
2	33	66	13	12	1
TOTAL	53	106	16	16	2
RATIO		2/UNIT	0.33/UNIT	2% OF TOTAL	

PARKING REQUIRED (TOTAL)			PARKING PROVIDED	
UNIT TYPE	SPACES PER UNIT		PARKING TYPE	SPACES
2+BR	2/UNIT	106	GARAGE	106
GUEST	1 PER 4	13	GUEST	18/2 HANDICAP
TOTAL		119	TOTAL	124

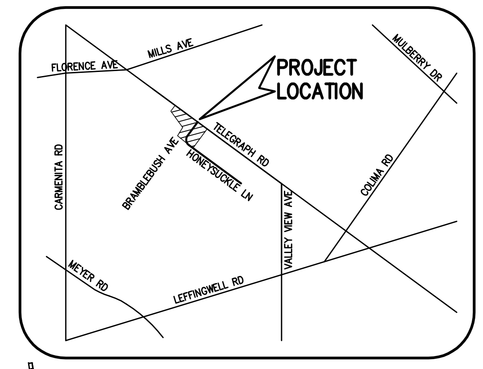

NORTH
VICINITY MAP
NTS

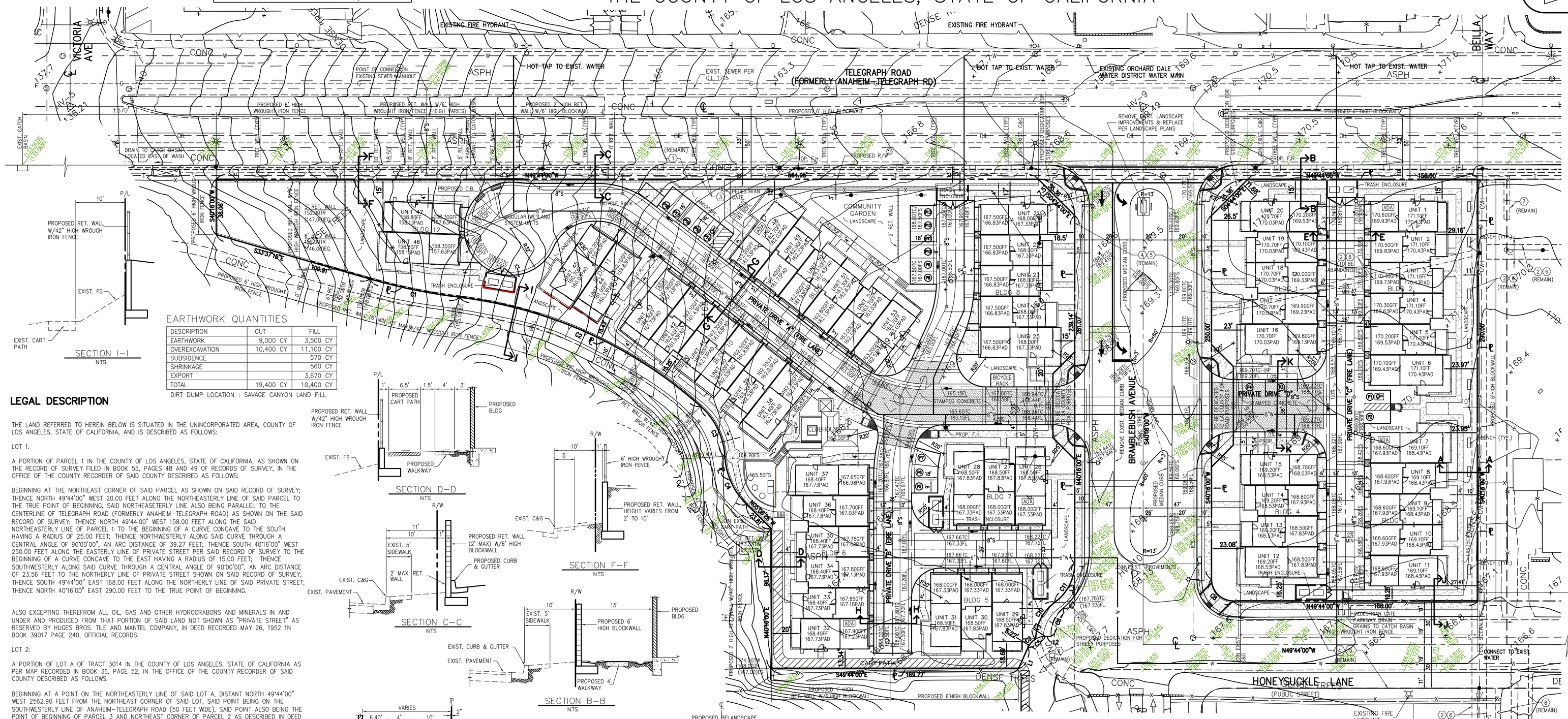

PROJECT DESCRIPTION

1. NO. OF LOTS: 2
2. NO. DWELLING UNITS: 53
3. NO. OF BUILDING PROPOSED: 12
4. APN : 8030-008-011 & 8030-023-024

ADA UNITS		
REQUIRED	PROVIDED	
5.3	6	
	LOT 1	2
	LOT 2	4

ZONING: (EXISTING)
EXISTING PLAN CATEGORIES
OPEN SPACE (OS), AREA= 2.46 Acres AND
LOW DENSITY RESIDENTIAL (1), AREA= 1.21 Acres

EXISTING ZONING DESIGNATIONS
A-1 (AREA=2.46 Acres) AND
C-3-BE (AREA=1.21 Acres)

ZONING: (PROPOSED)
PROPOSED LAND USE CATEGORY
CATEGORY 3 (MEDIUM DENSITY RESIDENTIAL-12-22 DWELLING UNITS/PER GROSS ACRE)

PROPOSED ZONING
R3-DP (LIMITED MULTIPLE RESIDENCE DEVELOPMENT PROGRAM)

UTILITIES:

SEWER:
CONSOLIDATED SEWER MAINTENANCE DISTRICT OF LOS ANGELES COUNTY
COUNTY OF LOS ANGELES DEPARTMENT OF PUBLIC WORKS
SEWER MAINTENANCE DIVISION
P.O. BOX 1475
ALAMBRA, CA 91802-1475
(626) 300-3399

WATER:
ORCHARD DALE WATER DISTRICT
13819 EAST TELEGRAPH ROAD,
WHITTIER, CA 90604
(562) 941-0114

BASIS OF BEARING

THE BEARING SHOWN HEREON ARE BASED ON THE BEARING OF TELEGRAPH ROAD BEING NORTH 49°44'00" WEST AS SHOWN ON THE RECORD OF SURVEY RECORDED IN BOOK 55 PAGE 48 OF MAPS, RECORDS OF LOS ANAGELES COUNTY, STATE OF CALIFORNIA.

FLOOD ZONE DESIGNATION

FLOOD ZONE: X
FLOOD MAP NO.: 06037C1841F
COMMUNITY PANEL NO.: 1841
COMMUNITY NO.: 065043
DATE OF MAP: SEPTEMBER 26, 2008

BENCHMARK

BM# Y 8224 ELEV: 139.832
(SANTA FE QUAD 2005)

L&T IN N'LY CB 300MM(11FT) ELY/O BCR @ NE COR VICTORIA AVE & TELEGRAPH RD

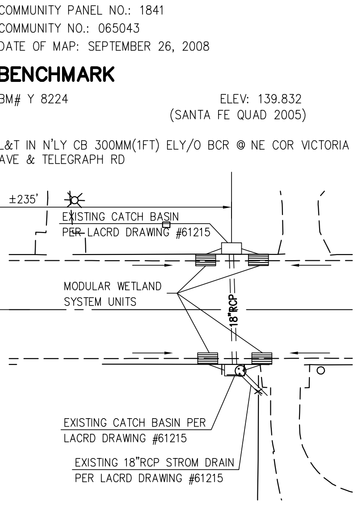

EARTHWORK QUANTITIES

DESCRIPTION	CUT	FILL
EARTHWORK	9,000 CY	3,500 CY
OVEREXCAVATION	10,400 CY	11,100 CY
SUBSIDENCE		570 CY
SHRINKAGE		560 CY
EXPORT		3,670 CY
TOTAL	19,400 CY	10,400 CY

DIRT DUMP LOCATION : SAVAGE CANYON LAND FILL

LEGAL DESCRIPTION

THE LAND REFERRED TO HEREIN BELOW IS SITUATED IN THE UNINCORPORATED AREA, COUNTY OF LOS ANGELES, STATE OF CALIFORNIA, AND IS DESCRIBED AS FOLLOWS:

LOT 1:

A PORTION OF PARCEL 1 IN THE COUNTY OF LOS ANGELES, STATE OF CALIFORNIA, AS SHOWN ON THE RECORD OF SURVEY FILED IN BOOK 55, PAGES 48 AND 49 OF RECORDS OF SURVEY, IN THE OFFICE OF THE COUNTY RECORDER OF SAID COUNTY DESCRIBED AS FOLLOWS:

BEGINNING AT THE NORTHEAST CORNER OF SAID PARCEL AS SHOWN ON SAID RECORD OF SURVEY; THENCE NORTH 49°44'00" WEST 20.00 FEET ALONG THE NORTHEASTERLY LINE OF SAID PARCEL TO THE TRUE POINT OF BEGINNING, SAID NORTHEASETERLY LINE ALSO BEING PARALLEL TO THE CENTERLINE OF TELEGRAPH ROAD (FORMERLY ANAHEIM-TELEGRAPH ROAD) AS SHOWN ON THE SAID RECORD OF SURVEY; THENCE NORTH 49°44'00" WEST 158.00 FEET ALONG THE SAID NORTHEASTERLY LINE OF PARCEL 1 TO THE BEGINNING OF A CURVE CONCAVE TO THE SOUTH HAVING A RADIUS OF 25.00 FEET; THENCE NORTHWESTERLY ALONG SAID CURVE THROUGH A CENTRAL ANGLE OF 90°00'00", AN ARC DISTANCE OF 39.27 FEET; THENCE SOUTH 40°16'00" WEST 250.00 FEET ALONG THE EASTERLY LINE OF PRIVATE STREET PER SAID RECORD OF SURVEY TO THE BEGINNING OF A CURVE CONCAVE TO THE EAST HAVING A RADIUS OF 15.00 FEET; THENCE SOUTHWESTERLY ALONG SAID CURVE THROUGH A CENTRAL ANGLE OF 90°00'00", AN ARC DISTANCE OF 23.56 FEET TO THE NORTHERLY LINE OF PRIVATE STREET SHOWN ON SAID RECORD OF SURVEY; THENCE SOUTH 49°44'00" EAST 168.00 FEET ALONG THE NORTHERLY LINE OF SAID PRIVATE STREET; THENCE NORTH 40°16'00" EAST 290.00 FEET TO THE TRUE POINT OF BEGINNING.

ALSO EXCEPTING THEREFROM ALL OIL, GAS AND OTHER HYDROCRABONS AND MINERALS IN AND UNDER AND PRODUCED FROM THAT PORTION OF SAID LAND NOT SHOWN AS "PRIVATE STREET" AS RESERVED BY HUGES BROS. TILE AND MANTEL COMPANY, IN DEED RECORDED MAY 26, 1952 IN BOOK 39017 PAGE 240, OFFICIAL RECORDS.

LOT 2:

A PORTION OF LOT A OF TRACT 3014 IN THE COUNTY OF LOS ANGELES, STATE OF CALIFORNIA AS PER MAP RECORDED IN BOOK 36, PAGE 52, IN THE OFFICE OF THE COUNTY RECORDER OF SAID COUNTY DESCRIBED AS FOLLOWS:

BEGINNING AT A POINT ON THE NORTHEASTERLY LINE OF SAID LOT A, DISTANT NORTH 49°44'00" WEST 2562.90 FEET FROM THE NORTHEAST CORNER OF SAID LOT, SAID POINT BEING ON THE SOUTHWESTERLY LINE OF ANAHEIM-TELEGRAPH ROAD (50 FEET WIDE), SAID POINT ALSO BEING THE POINT OF BEGINNING OF PARCEL 3 AND NORTHEAST CORNER OF PARCEL 2 AS DESCRIBED IN DEED RECORDED DECEMBER 28, 1960 IN BOOK 4052, PAGES 56 TO 66 OF OFFICIAL RECORDS; THENCE CONTINUING ALONG THE NORTHEASTERLY LINE OF SAID LOT A NORTH 49°44'00" WEST 78.43 FEET; THENCE LEAVING SAID NORTHEASTERLY LINE OF SAID LOT A SOUTH 40°16'00" WEST 63.06 FEET; THENCE SOUTH 33°37'15" EAST 109.91 FEET TO THE BEGINNING OF A CURVE CONCAVE TO THE NORTHEAST HAVING A RADIUS OF 392.00 FEET; THENCE SOUTHEASTERLY ALONG SAID CURVE THROUGH A CENTRAL ANGLE OF 09°06'33" AN ARC DISTANCE OF 62.32 FEET TO THE EASTERLY LINE OF PARCEL 2 AS DESCRIBED IN DEED RECORDED DECEMBER 28, 1960 IN BOOK 4052, PAGES 56 TO 66 OF OFFICIAL RECORDS, SAID EASTERLY LINE ALSO BEING THE WESTERLY LINE OF PARCEL 3 AS DESCRIBED IN DEED RECORDED DECEMBER 28, 1960 IN BOOK 4052, PAGES 56 TO 66 OF OFFICIAL RECORDS; THENCE CONTINUING SOUTHEASTERLY ALONG SAID CURVE THROUGH A CENTRAL ANGLE OF 00°06'15" AN ARC DISTANCE OF 0.71 FEET TO THE BEGINNING OF A COMPOUND CURVE CONCAVE TO THE SOUTHWEST HAVING A RADIUS OF 303.00 FEET; THENCE SOUTHEASTERLY ALONG SAID CURVE THROUGH A CENTRAL ANGLE OF 34°55'50" AN ARC DISTANCE OF 184.73 FEET TO THE BEGINNING OF A COMPOUND CURVE CONCAVE TO THE NORTHWEST HAVING A RADIUS OF 50.00 FEET; THENCE SOUTHWESTERLY ALONG SAID CURVE THROUGH A CENTRAL ANGLE OF 44°57'39" AN ARC DISTANCE OF 39.24 FEET TO THE BEGINNING OF A CURVE CONCAVE TO THE SOUTHEAST HAVING A RADIUS OF 50.00 FEET; THENCE SOUTHWESTERLY ALONG SAID CURVE THROUGH A CENTRAL ANGLE OF 42°32'01" AN ARC DISTANCE OF 37.12 FEET; THENCE SOUTH 05°08'26" EAST 23.81 FEET; THENCE SOUTH 40°16'00" WEST 96.17 FEET; THENCE SOUTH 49°44'00" EAST 125.52 FEET TO THE EASTERLY LINE OF SAID PARCEL 3 AS DESCRIBED IN DEED RECORDED DECEMBER 28, 1960 IN BOOK 4052, PAGES 56 TO 66 OF OFFICIAL RECORDS, SAID LINE ALSO BEING THE WESTERLY LINE OF PARCEL 9 AS SHOWN ON RECORD OF SURVEY FILED IN BOOK 55, PAGES 48 AND 49 OF RECORD OF SURVEYS OF SAID COUNTY; THENCE CONTINUING SOUTH 49°44'00" EAST 44.25 FEET; THENCE NORTH 64°34'09" EAST 15.97 FEET TO THE BEGINNING OF A CURVE CONCAVE TO THE SOUTH HAVING A RADIUS OF 13.00 FEET; THENCE EASTERLY ALONG SAID CURVE THROUGH A CENTRAL ANGLE OF 65°41'51" AN ARC DISTANCE OF 14.91 FEET; THENCE SOUTH 49°44'00" EAST 4.04 FEET TO THE BEGINNING OF A NON-TANGENT CURVE CONCAVE TO THE SOUTH EAST HAVING A RADIUS OF 22.00 FEET; RADIAL THROUGH THE POINT BEING NORTH 55°19'46" WEST, THENCE NORTHEASTERLY ALONG SAID CURVE AN ARC DISTANCE OF 22.05 FEET TO THE BEGINNING OF A REVERSE CURVE CONCAVE TO THE NORTH HAVING A RADIUS OF 39.50 FEET; THENCE EASTERLY ALONG SAID CURVE THROUGH A CENTRAL ANGLE OF 17°10'38" AN ARC DISTANCE OF 11.84 FEET TO THE WESTERLY LINE OF PRIVATE DRIVE AS SHOWN ON SAID RECORD OF SURVEY FILED IN BOOK 55, PAGES 48 AND 49 OF RECORDS OF SURVEY; THENCE NORTH 40°16'00" EAST 261.07 FEET ALONG THE SAID WESTERLY LINE OF PRIVATE DRIVE TO THE BEGINNING OF A CURVE CONCAVE TO THE WEST HAVING A RADIUS OF 25.00 FEET; THENCE NORTHWESTERLY ALONG SAID CURVE THROUGH A CENTRAL ANGLE OF 90°00'00" AN ARC DISTANCE OF 39.27 FEET TO THE NORTHEASTERLY LINE OF SAID PARCEL 9; THENCE NORTH 49°44'00" WEST 57.90 FEET ALONG THE NORTHEASTERLY LINE OF SAID PARCEL 9; THENCE NORTH 40°16'00" EAST 25.00 FEET ALONG THE PROLONGATION OF THE WESTERLY LINE OF SAID PARCEL 9 TO A POINT ON THE NORTHEASTERLY LINE OF SAID LOT A; THENCE NORTH 49°44'00" WEST 428.62 FEET ALONG THE NORTHEASTERLY LINE OF SAID LOT A TO THE POINT OF BEGINNING.

EXCEPTING THEREFROM THAT PORTION DESCRIBED AS PARCEL 32-42 ACQUIRED BY THE COUNTY OF LOS ANGELES IN FINAL ORDER OF CONDEMNATION RECORDED SEPTEMBER 16, 1969 AS INSTRUMENT NO. 2186, IN OFFICIAL RECORDS OF LOS ANGELES COUNTY.

THE ABOVE PARCEL IS SHOWN AS PARCEL 3 OF LOT LINE ADJUSTMENT #RLLA 2013-00010 RECORDED APRIL 14, 2014, AS INSTRUMENT NO. 20140377523, OFFICIAL RECORDS.

SECTION I-I
NTS

SECTION D-D
NTS

SECTION C-C
NTS

SECTION F-F
NTS

SECTION B-B
NTS

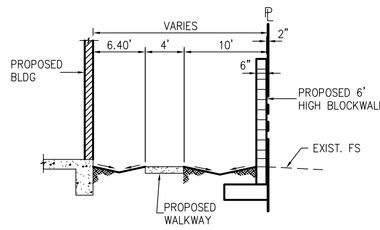

SECTION A-A
NTS

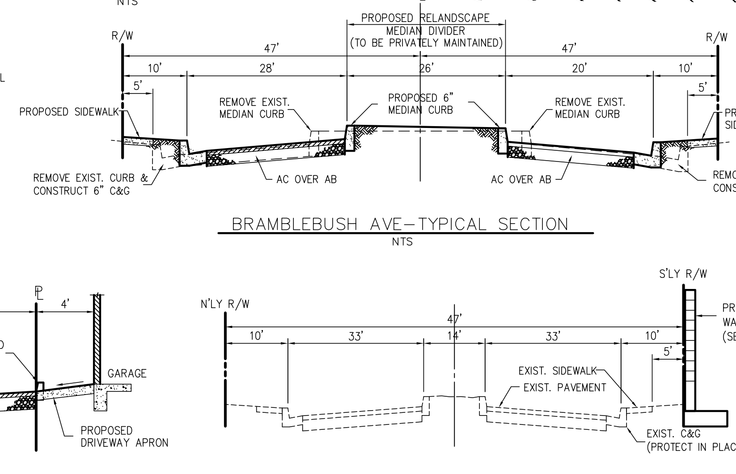

BRAMBLEBUSH AVE-TYPICAL SECTION
NTS

SECTION G-G
PRIVATE DRIVE "A" TYPICAL SECTION
NTS

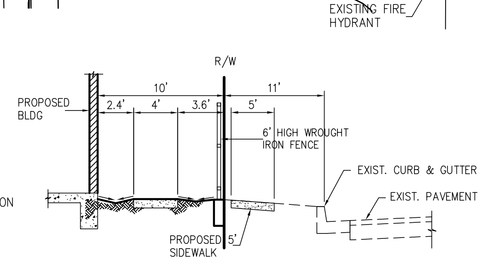

SECTION J-J
NTS

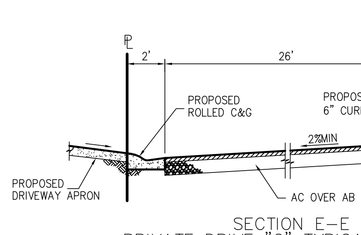

SECTION E-E
PRIVATE DRIVE "C" TYPICAL SECTION
NTS

TELEGRAPH RD-TYPICAL SECTION
NTS

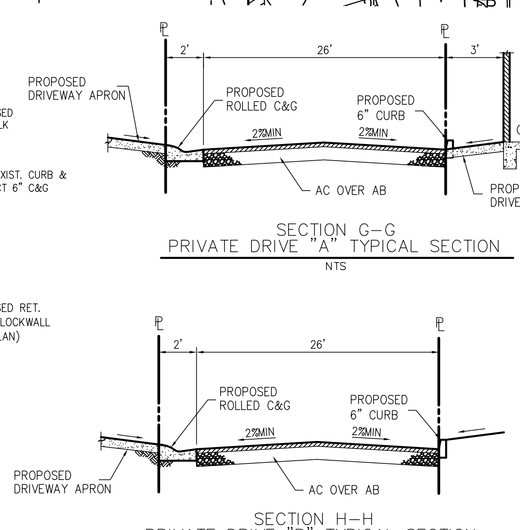

SECTION H-H
PRIVATE DRIVE "B" TYPICAL SECTION
NTS

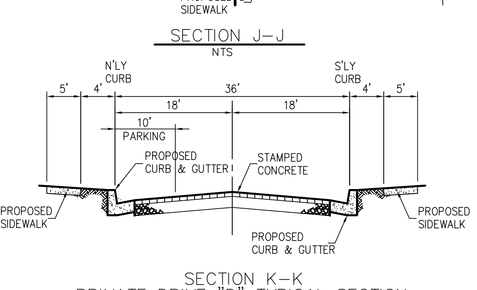

SECTION K-K
PRIVATE DRIVE "D" TYPICAL SECTION
NTS

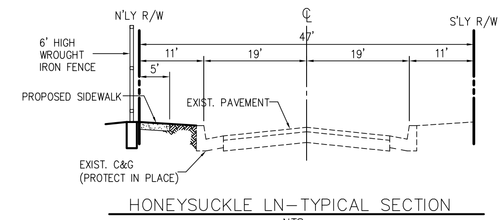

HONEYSUCKLE LN-TYPICAL SECTION
NTS

REGISTERED PROFESSIONAL ENGINEER SURENDER M. DEWAN NO. 34559 Exp. 9/30/15 CIVIL STATE OF CALIFORNIA

SCALE: 1"=30'

EASEMENT NOTES:

1. EASEMENT(S) FOR PIPELINES PURPOSES RECORDED IN BOOK 11119, PAGE 1, OF OFFICIAL RECORDS
2. EASEMENT(S) FOR POLE LINES AND CONDUITS PURPOSES RECORDED IN BOOK 39333, PAGE 5, OF OFFICIAL RECORDS
3. EASEMENT(S) FOR CONDUITS PURPOSES RECORDED IN BOOK 42885, PAGE 24, OF OFFICIAL RECORDS
4. EASEMENT(S) FOR PUBLIC STREET SHOWN ON MAP FILED IN BOOK 55, PAGE 48 OF RECORD OF SURVEY, FOR GAS PIPES AND MAINS AS GRANTED TO SOUTHERN COUNTIES GAS COMPANY OF CALIFORNIA, BY DEED RECORDED IN BOOK 23619, PAGE 195, OF OFFICIAL RECORDS.
5. EASEMENT(S) FOR PUBLIC ROAD AND HIGHWAY PURPOSE(S) AND RIGHTS INCIDENTAL THERETO AS SET FORTH IN A DOCUMENT RECORDED IN BOOK 24483, PAGE 186, OF OFFICIAL RECORDS.
6. EASEMENT(S) FOR POLE LINES AND CONDUIT PURPOSE(S) AND RIGHTS INCIDENTAL THERETO AS SET FORTH IN A DOCUMENT RECORDED IN BOOK 39333, PAGE 3, OF OFFICIAL RECORDS AND BOOK 39363, PAGE 274, OF OFFICIAL RECORDS.
7. EASEMENT(S) FOR POLE LINES AND CONDUIT PURPOSE(S) AND RIGHTS INCIDENTAL THERETO AS SET FORTH IN A DOCUMENT RECORDED IN BOOK 42671, PAGE 440, OF OFFICIAL RECORDS.
8. EASEMENT(S) FOR POLE LINES AND CONDUIT PURPOSE(S) AND RIGHTS INCIDENTAL THERETO AS SET FORTH IN A DOCUMENT RECORDED IN BOOK 41508, PAGE 136, OF OFFICIAL RECORDS.
9. EASEMENT(S) FOR PUBLIC ROAD AND HIGHWAY PURPOSE(S) AND RIGHTS INCIDENTAL THERETO AS GRANTED IN A DOCUMENT GRANTED TO COUNTY OF LOS ANGELES RECORDED DECEMBER 5, 1984, INSTRUMENT NO. 84-1429872, OF OFFICIAL RECORDS.

NOTE: NO PRIVATE EASEMENTS EXIST ON SITE.

EXHIBIT "A"

SITE ADDRESS
14000 TELEGRAPH ROAD, WHITTIER, CA-90604

ENGINEER
DMS CONSULTANTS, INC.
CIVIL ENGINEERS
12371 Lewis St. #203 Garden Grove CA. 92840 P. 714-740-8840 F. 714-740-8842
SURENDER DEWAN RCE 34559 EXP. 09/30/15

OWNER
CANDLEWOOD COUNTRY CLUB
A CALIFORNIA NON-PROFIT CORPORATION
14000 Telegraph Rd
Whittier, CA.

DEVELOPER:
BRANDYWINE HOMES
16580 Aston-Irvine, CA 92606
Tel: (949) 296-2400 Fax: (949) 296-2420

MAJOR LAND DIVISION
TENTATIVE TRACT NO. 072684
(FOR CONDOMINIUM PURPOSES)
LOCATED IN THE UNINCORPORATE TERRITORY OF THE COUNTY OF LOS ANGELES, STATE OF CALIFORNIA

DATE: 08/26/14 SHEET 1 OF 1