RECEIVED
DEPT OF REGIONAL PLANNING
TR061059-1 EXHIBIT
DATE: 15 SEP 2015

MAJOR LAND DIVISION
AMENDMENT TO EXHIBIT
TENTATIVE TRACT NO. 061059
IN THE UNINCORPRATED TERRITORY OF THE COUNTY OF LOS ANGELES
STATE OF CALIFORNIA

A PORTION OF LOT 62 OF TRACT NO. 701, AS PER MAP RECORDED IN BOOK 16 PAGE 110–111 OF MAPS, IN THE OFFICE OF THE COUNTY RECORDER OF SAID COUNTY.

FOR CONDOMINIUM PURPOSES

SEP 9, 2015

ABBREVIATIONS:

C/B ..... Catch Basin
C.B.W. ..... Conc. Block Wall
C & G ..... Curb and Gutter
C.L.F. ..... Chain Link Fence
CONC. ..... Cement Concrete
D/A ..... Driveway Apron
DWY. ..... Driveway
E.P. ..... Edison Pole
EX. ..... Existing
F.F. ..... Finish Floor Elevation
F.H. ..... Fire Hydrant
F.L. ..... Flow Line Elevation
H.L. ..... House Lateral
PAD.. ..... Pad Elevation
S.M.H. ..... Sewer Manhole
S/W ..... Sidewalk
T.C. ..... Top of Curb Elevation
T.W. ..... Top of Wall Elevation
W.F. ..... Wooden Fence
W.M. ..... Water Meter

LEGEND:

100.36 ..... Design Elevation
(100.10) ..... Existing Elevation
(99) ..... Ex. Ground Contour Line
..... Prop. Sheet Flow
..... Ex. Flow
..... Pro. Flow Line
..... Street Light
..... Guywire
..... Tree, Diameter/Dripline
10"/10'
..... Ex. Tree, Diameter T.B.R.
10"ø
..... EX. Structure
(6) ..... Proposed Guest Parkings
..... Fire Lane

PROJECT:

5 UNITS CONDO
7909 ARROYO DR.,
ROSEMEAD (LA CO), CA
APN: 5275–008–017

* REMOVE ALL EX. STRUCTURES PRIOR TO FINAL MAP APPROVAL.

OWNERS/APPLICANT:

WUSHING WANG AND MARIA LIANGCHIH CHUEH,
BILL LAU AND MARY LAU
FRANK WEN AND CECILLIA WEN
1120 S. SAN GABRIEL BLVD., #233
SAN GABRIEL, CA 91776
TEL (626) 286–9718
FAX (626) 286–9728

NOTES:

ZONE: A1 (PRESENT)
ZONE: A1 (PROPOSED)
NO. OF UNITS 5
PROPOSED BLDG: 2–STORY DETACHED CONDO.
3 BED ROOMS, 2 ½ BATH
LIVING AREA: 1,400 S.F.
2–CAR GARAGE: 645 S.F.

LOT COVERAGE FAR= EACH FLOOR AREA X 5 UNITS / LOT AREA
= 1400 SF X 5 / 29,632 SF = 7000 SF / 29,632 SF =23.6%<25% OK

GSA=EACH FLOOR AREA X 5 UNITS=1,400 SF X 5 =7000 SF
LOT COVERAGE=EACH FOOTPRINT AREA X 5 UNITS=1,340 SF X 5 =6700 SF
CONCLUSION: GSA OR LOT COVERAGE DOESN'T EXCEED 7,000 SF
FRONT YARD LANSCAPING AREA = 2,554 SF
SITE LANSCAPING AREA = 4,808 SF
FRONT YARD LANDSCAPING FAR =2,554/4,808=53%>50% OK

TOTAL NO. OF PARKINGS: 16
ENCLOSED GARAGE PARKINGS: 2X5 UNITS=10
OPEN GUEST PARKINGS: 6(1,600 SF.)
TOTAL LOT AREA: 33,420 SF (0.77 AC) (GROSS to Centerline)
: 29,686 SF (0.68 AC) (GROSS)
: 29,632 SF (0.68 AC) (NET)

EARTHWORK QUANTITIES:
CUT: 2,164 C.Y. ; FILL: 229 C.Y..
IMPORT: 0 C.Y. ; EXPORT: 1,935 C.Y..
EXPORT LOCATION: PUENTE HILLS LANDFILL
ADDRESS: 13130 CROSSROADS PARKWAY
CITY OF INDUSTRY, CA 91746
TEL: (562) 908–4876 / (562) 908–4288 ex. 6048

* DEDICATE THE RIGHT TO RESTRICT VEHICULAR ACCESS ON ARROYO DR.
* REPAIR OR REPLACE ANY DAMAGED CURB AND GUTTER
* INSTALL TREES AND STREET LIGHTS PER CITY STANDARD.
LOT COVERAGE: 14,816 SF./29,632 SF. = 50%
* 60% FRONT YARD LANDSCAPING PROVIDED.
* ALL STRUCTURES WILL BE REMOVED PRIOR TO FINAL MAP APPROVAL.

SCALE: 1"=20'

VICINITY MAP
NOT TO SCALE

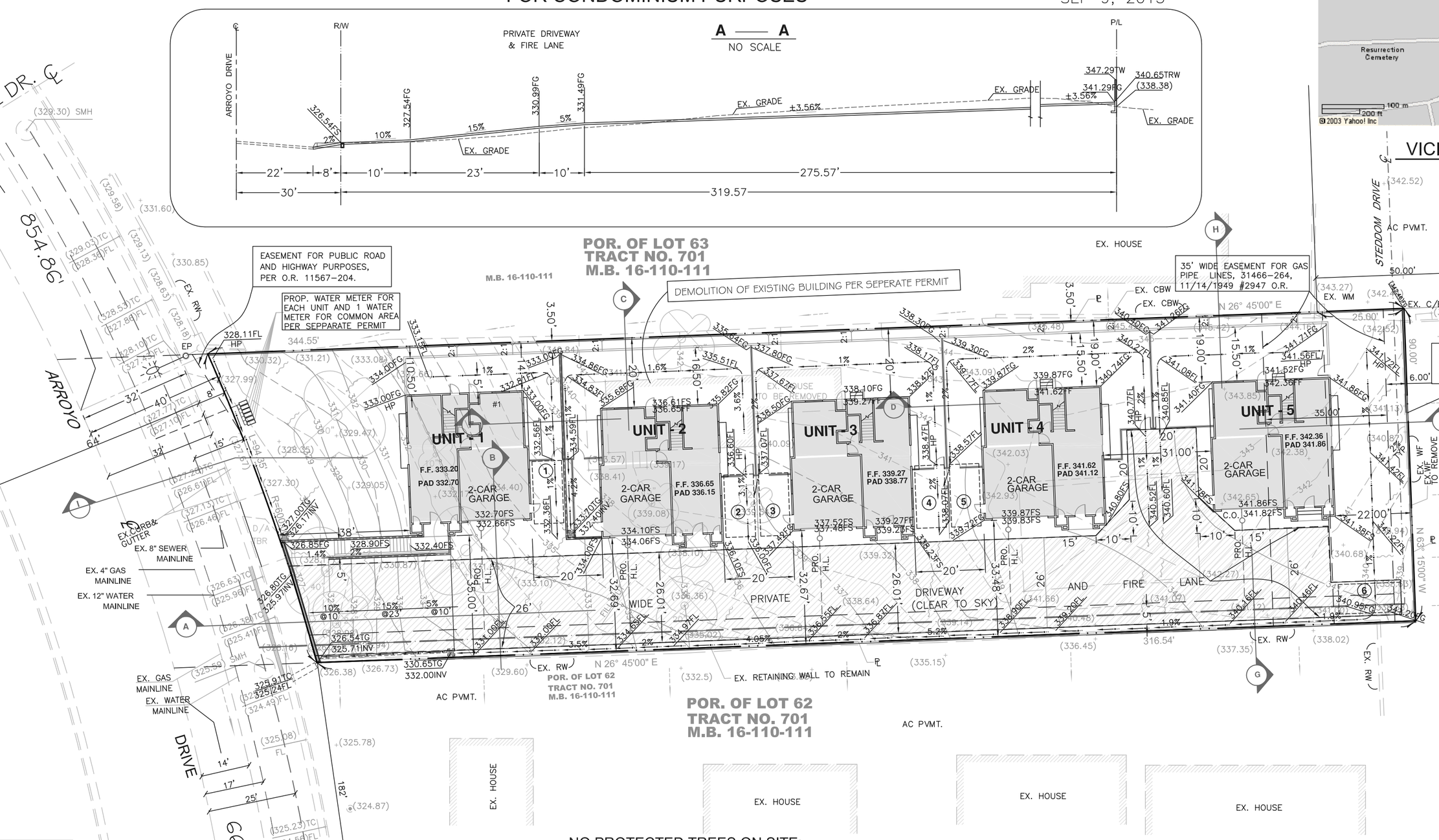

PRIVATE DRIVEWAY AND FIRE LANE DETAIL
N.T.S.

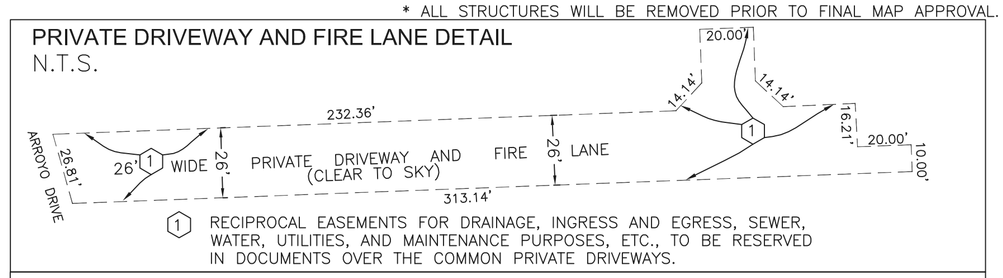

(1) RECIPROCAL EASEMENTS FOR DRAINAGE, INGRESS AND EGRESS, SEWER, WATER, UTILITIES, AND MAINTENANCE PURPOSES, ETC., TO BE RESERVED IN DOCUMENTS OVER THE COMMON PRIVATE DRIVEWAYS.

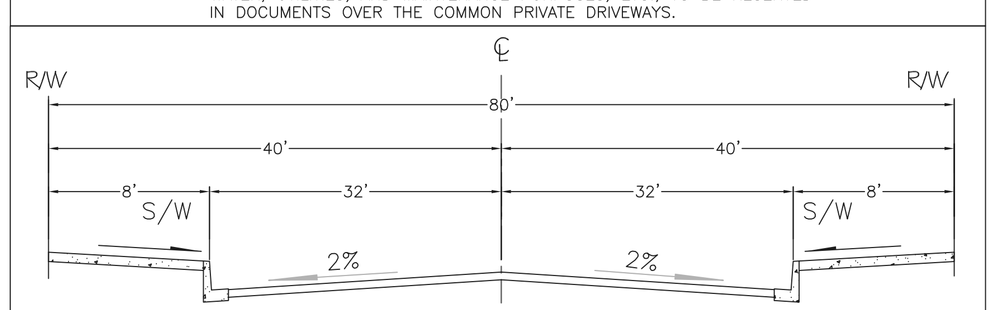

TYPICAL SECTION ARROYO DR.
N.T.S.

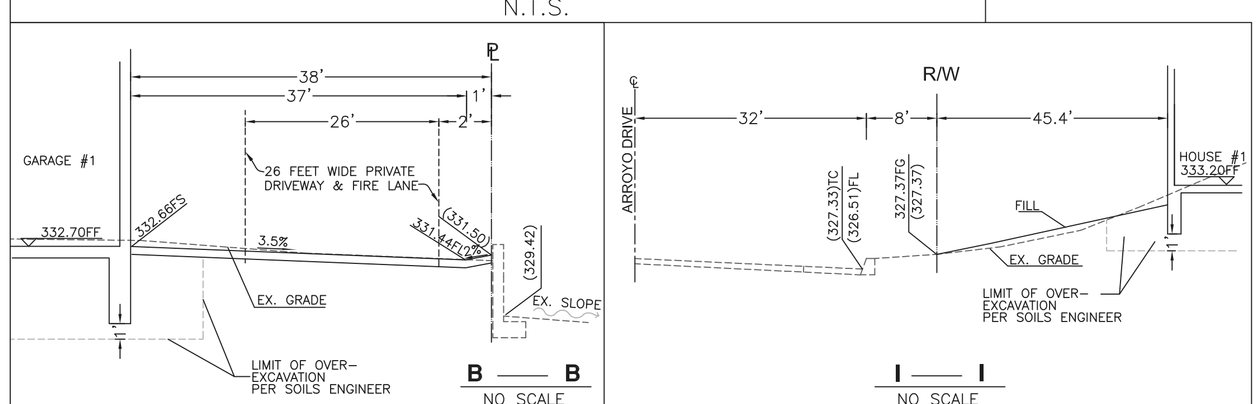

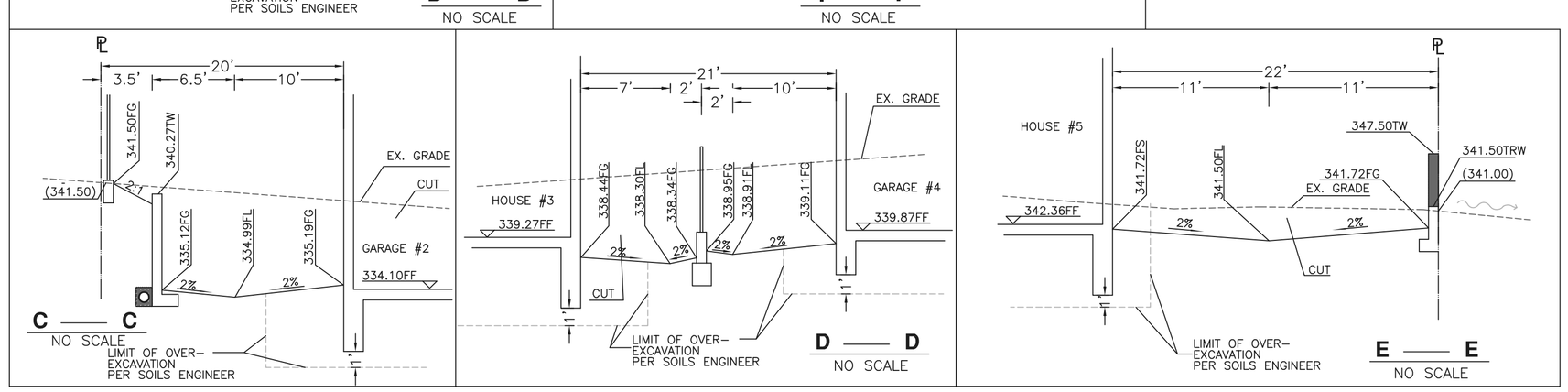

NO PROTECTED TREES ON SITE:

1. OAKS (QUERCUS SPP.)
2. WESTERN SYCAMORE (PLATAUNS RACEMOSA)
3. CALIFORNIA BAY (UMBELLULARIA CALIFORNIA)
4. SOUTHERN CALIFORNIA BLACK WALNUT (JUGLANS CALIFORNIA)

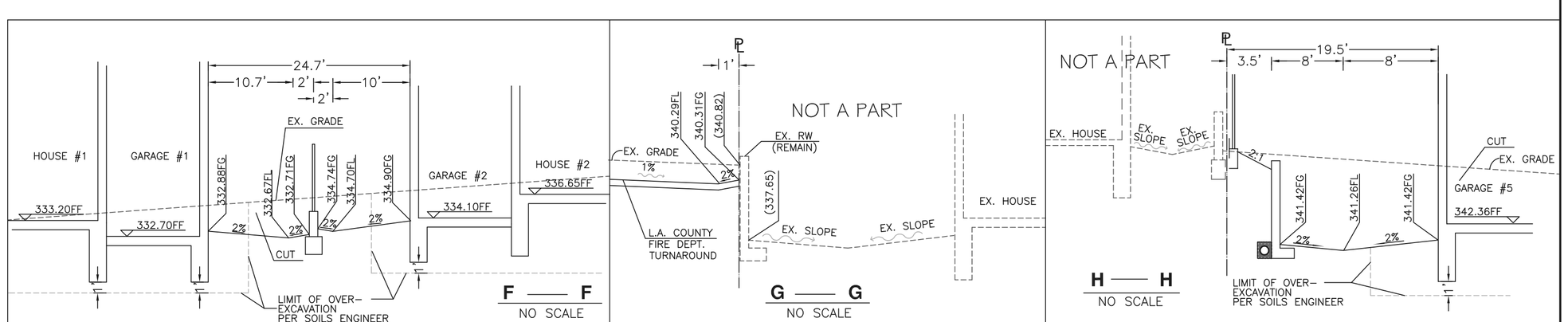

LICENSED LAND SURVEYOR
MAHMOUD KHALILI SEMNANI
LS 8766
EXP. 12/31/16
STATE OF CALIFORNIA

LEGAL DESCRIPTION:

A PORTION OF LOT 62 OF TRACT NO. 701, IN THE CITY OF ROSEMEAD, COUNTY OF LOS ANGELES, STATE OF CALIFORNIA, AS PER MAP RECORDED IN BOOK 16 PAGE 110–111 OF MAPS, IN THE OFFICE OF THE COUNTY RECORDER OF SAID COUNTY.

BENCH MARK:

B.M. NUMBER Y 7758
QUAD (YEAR) BASELINE (1995)
ELEVATION 334.881
DESCRIPTION RDBM TAG IN N CB 300MM W/O BCR @ NW COR HILL DR & SAN GABRIEL BLVD 35M W & 12.8M N/O C/L INT.

TRITECH ENGINEERING ASSOCIATES
SUBDIVISION
LAND SURVEY
CIVIL ENGINEERING
& DESIGN
135 N. SAN GABRIEL BLVD.
SAN GABRIEL, CA 91775
TEL: (626) 570-1918 FAX: (626) 737-8786
EMAIL: info@tritechengineer.com

AMENDMENT TO EXHIBIT MAP

SCALE: 1"=20'		DRAWN BY: CHERRY
DATE: 9–9–15		REVISED: Iris

7909 ARROYO DRIVE,
ROSEMEAD, CA 91770

SHEET 1 OF 1 SHEET

JOB NO. 031137