TUCHSCHER ENGINEERING GROUP, INC.
5318 E. 2nd Street #539
Long Beach, CA 90803
p: 310.613.9980
i: www.TEGLosAngeles.com

CIVIL CALCULATIONS

GRADING QUANTITIES

Project:

Mandel Residence
3004 Sequit Drive
Malibu, CA 90265

Prepared for:

Margot Mandel
2918 Sequit Drive
Malibu, CA 90265

STAMP
DATE
DESIREE FLORES DESIGN ENGINEER

JOB # 7-15-824
DATE 9/29/2015

TUCHSCHER ENGINEERING GROUP, INC.
5318 E. 2nd Street #539
Long Beach, CA 90803
p: 310.613.9980
i: www.TEGLosAngeles.com

Project: Mandel Residence
3004 Sequit Drive
Malibu, CA 90265

Job# 7-15-824
Date 9/29/2015

TABLE OF CONTENTS

1.0 QUANTITY SUMMARIES 1

2.0 DESCRIPTION OF CALCULATION SHAPES..... 2

3.0 CUT QUANTITIES..... 4

4.0 FILL QUANTITIES..... 6

STAMP
DATE
DESIREE FLORES DESIGN ENGINEER

TUCHSCHER ENGINEERING GROUP, INC.
5318 E. 2nd Street #539
Long Beach, CA 90803
p: 310.613.9980
i: www.TEGLosAngeles.com

SECTION	1.0
SHEET #	1
ENG.	DF
DATE	9/29/2015
JOB #	7-15-824

1.0 QUANTITY SUMMARIES

UNDER STRUCTURE	
	QUANTITY
CUT	226
FILL	0
TOTAL	226

OUTSIDE OF FOOTPRINT	
	QUANTITY
CUT	317
FILL	0
TOTAL	317

TOTAL	
	QUANTITY
CUT	544
FILL	0
TOTAL	544

NET	544	EXPORT

NOTE: ALL QUANTITIES ARE IN CUBIC YARDS

TUCHSCHER ENGINEERING GROUP, INC.
5318 E. 2nd Street #539
Long Beach, CA 90803
p: 310.613.9980
i: www.TEGLosAngeles.com

SECTION	2.0
SHEET #	2
ENG.	DF
DATE	9/29/2015
JOB #	7-15-824

2.0 DESCRIPTION OF CALCULATION SHAPES

RECTANGULAR PRISM

GRADING QUANTITY (cu.yd.)

$$Q = \frac{(\text{AREA (sqft)} \times \text{HEIGHT (ft)})}{27}$$

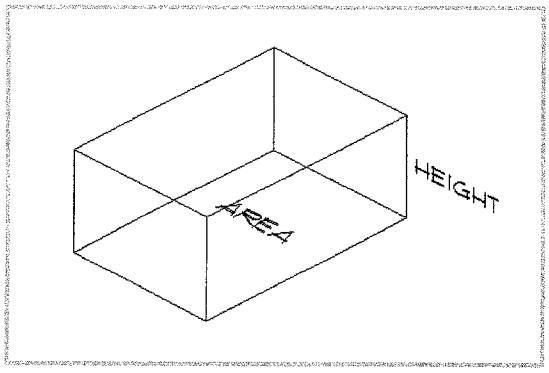

WEDGE

GRADING QUANTITY (cu.yd.)

$$Q = \frac{1/2 * (\text{AREA (sqft)} \times \text{HEIGHT (ft)})}{27}$$

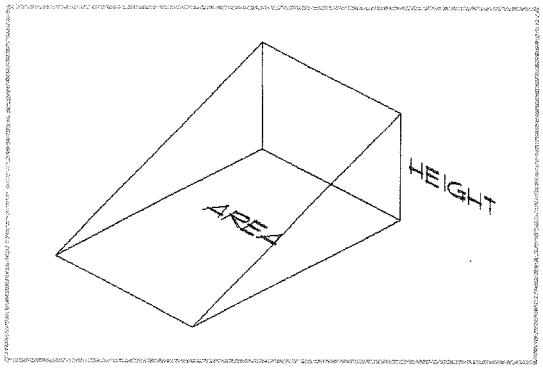

SLOPED WEDGE

GRADING QUANTITY (cu.yd.)

$$Q = \frac{1/2 * (\text{AREA (sqft)} \times \text{HEIGHT (ft)})}{27} - \frac{1/2 * (\text{AREA (sqft)} \times \text{HEIGHT (ft)})}{27}$$

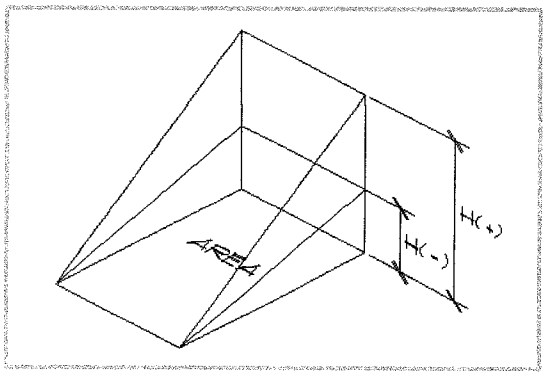

TUCHSCHER ENGINEERING GROUP, INC.
5318 E. 2nd Street #539
Long Beach, CA 90803
p: 310.613.9980
i: www.TEGLosAngeles.com

SECTION	2.0
SHEET #	3
ENG.	DF
DATE	9/29/2015
JOB #	7-15-824

2.0 DESCRIPTION OF CALCULATION OF SHAPES

AVERAGE END AREA

GRADING QUANTITY (cu.yd.)

$$A = \frac{((H_1+H_2)/2 * W_{1-2})+(H_3+H_4)/2 * W_{3-4}))}{2}$$

$$Q = \frac{A\ (sqft) * L\ (ft)}{27}$$

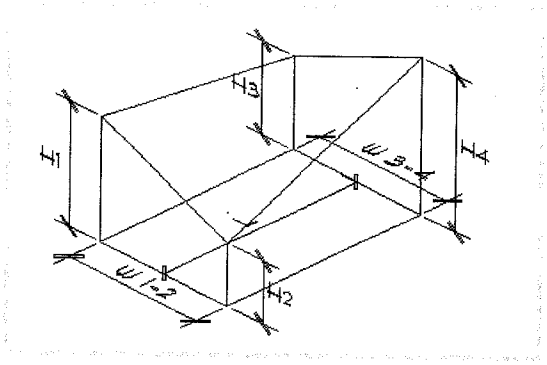

QUARTER PYRAMID

GRADING QUANTITY (cu.yd.)

$$Q = \frac{1/12 * (AREA * 4\ (sqft)\ X\ HEIGHT\ (ft))}{27}$$

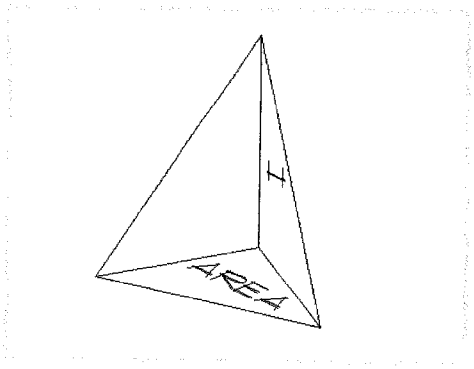

CAISSON

GRADING QUANTITY (cu.yd.)

$$Q = \frac{\pi/4 * D^2 * H}{27}$$

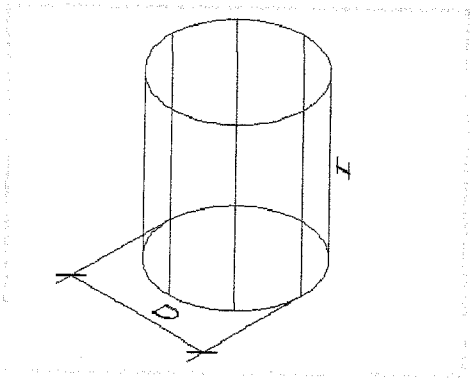

TUCHSCHER ENGINEERING GROUP, INC.
5318 E. 2nd Street #539
Long Beach, CA 90803
p: 310.613.9980
i: www.TEGLosAngeles.com

SECTION	3.0
SHEET #	4
ENG.	DF
DATE	9/29/2015
JOB #	7-15-824

3.0 CUT - UNDERSTRUCTURE

CUT		RECT. PRISM		WEDGE		SLOPED WEDGE				
STRIP	DESCRIPTION	AREA ft^2	HT ft	AREA ft^2	HT ft	AREA ft^2	HT ft	AREA (-) ft^2	HT (-) ft	CUT yd^3
1	North Garage			112	1.25					2.59
2	North Lower Level			534	3.75					37.08
3	South Lower Level			681	6					75.67
4	Entry	267	1.75	267	3.75					35.85
5	East Garage	318	5.25	318	2.25					75.08
6										0.00
7										0.00
8										0.00
9										0.00
10										0.00
11										0.00
12										0.00
13										0.00
14										0.00
15										0.00
									CUT TOTAL	226.27

CUT		AVERAGE END AREA							
STRIP	DESCRIPTION	H1 ft	H2 ft	W 1-2 ft	H3 ft	H4 ft	W 3-4 ft	L ft	CUT yd^3
16									0.00
17									0.00
18									0.00
19									0.00
20									0.00
								CUT TOTAL	0.00

CUT		1/4 PYRAMID		CAISSON						
STRIP	DESCRIPTION	AREA ft^2	H ft	D FT	H ft					CUT yd^3
21										0.00
22										0.00
23										0.00
24										0.00
25										0.00
26										0.00
27										0.00
									CUT TOTAL	0.00

TUCHSCHER ENGINEERING GROUP, INC.
5318 E. 2nd Street #539
Long Beach, CA 90803
p: 310.613.9980
i: www.TEGLosAngeles.com

SECTION	3.0
SHEET #	5
ENG.	DF
DATE	9/29/2015
JOB #	7-15-824

3.0 CUT - OUTSIDE OF FOOTPRINT

CUT		RECT. PRISM		WEDGE		SLOPED WEDGE				
STRIP	DESCRIPTION	AREA ft^2	HT ft	AREA ft^2	HT ft	AREA ft^2	HT ft	AREA (-) ft^2	HT (-) ft	CUT yd^3
1	Patio			660	7.5					91.67
2	Deck			13	1.25					0.30
3	Side Yard	339	5.5	339	1.75					80.04
4	Driveway	1307	0.5	1307	5					145.22
5										0.00
6										0.00
7										0.00
8										0.00
9										0.00
10										0.00
11										0.00
12										0.00
13										0.00
14										0.00
15										0.00
									CUT TOTAL	317.23

CUT		AVERAGE END AREA							
STRIP	DESCRIPTION	H1 ft	H2 ft	W 1-2 ft	H3 ft	H4 ft	W 3-4 ft	L ft	CUT yd^3
16									0.00
17									0.00
18									0.00
19									0.00
20									0.00
								CUT TOTAL	0.00

CUT		1/4 PYRAMID		CAISSON						
STRIP	DESCRIPTION	AREA ft^2	H ft	D FT	H ft					CUT yd^3
21										0.00
22										0.00
23										0.00
24										0.00
25										0.00
26										0.00
27										0.00
									CUT TOTAL	0.00

TUCHSCHER ENGINEERING GROUP, INC.
5318 E. 2nd Street #539
Long Beach, CA 90803
p: 310.613.9980
i: www.TEGLosAngeles.com

SECTION	4.0
SHEET #	6
ENG.	DF
DATE	9/29/2015
JOB #	7-15-824

4.0 FILL - UNDERSTRUCTURE

FILL		RECT. PRISM		WEDGE		SLOPED WEDGE				
STRIP	DESCRIPTION	AREA ft^2	HT ft	AREA ft^2	HT ft	AREA ft^2	HT ft	AREA (-) ft^2	HT (-) ft	FILL yd^3
1										0.00
2										0.00
3										0.00
4										0.00
5										0.00
6										0.00
7										0.00
8										0.00
9										0.00
10										0.00
11										0.00
12										0.00
13										0.00
14										0.00
15										0.00
									FILL TOTAL	0.00

FILL		AVERAGE END AREA							
STRIP	DESCRIPTION	H1 ft	H2 ft	W 1-2 ft	H3 ft	H4 ft	W 3-4 ft	L ft	FILL yd^3
16									0.00
17									0.00
18									0.00
19									0.00
20									0.00
								FILL TOTAL	0.00

FILL		1/4 PYRAMID		CAISSON						
STRIP	DESCRIPTION	AREA ft^2	H ft	D FT	H ft					FILL yd^3
21										0.00
22										0.00
23										0.00
24										0.00
25										0.00
26										0.00
27										0.00
									FILL TOTAL	0.00

TUCHSCHER ENGINEERING GROUP, INC.
5318 E. 2nd Street #539
Long Beach, CA 90803
p: 310.613.9980
i: www.TEGLosAngeles.com

SECTION	4.0
SHEET #	7
ENG.	DF
DATE	9/29/2015
JOB #	7-15-824

4.0 FILL - OUTSIDE OF FOOT PRINT

FILL		RECT. PRISM		WEDGE		SLOPED WEDGE				
STRIP	DESCRIPTION	AREA ft^2	HT ft	AREA ft^2	HT ft	AREA ft^2	HT ft	AREA (-) ft^2	HT (-) ft	FILL yd^3
1										0.00
2										0.00
3										0.00
4										0.00
5										0.00
6										0.00
7										0.00
8										0.00
9										0.00
10										0.00
11										0.00
12										0.00
13										0.00
14										0.00
15										0.00
									FILL TOTAL	0.00

FILL		AVERAGE END AREA							
STRIP	DESCRIPTION	H1 ft	H2 ft	W 1-2 ft	H3 ft	H4 ft	W 3-4 ft	L ft	FILL yd^3
16									0.00
17									0.00
18									0.00
19									0.00
20									0.00
								FILL TOTAL	0.00

FILL		1/4 PYRAMID		CAISSON					
STRIP	DESCRIPTION	AREA ft^2	H ft	D FT	H ft				FILL yd^3
21									0.00
22									0.00
23									0.00
24									0.00
25									0.00
26									0.00
27									0.00
								FILL TOTAL	0.00