Sprint®

PROJECT:	**2.5 EQUIPMENT DEPLOYMENT**
SITE NAME:	**SADDLEBACK GROCERY**
SITE CASCADE:	**LA70XC530**
SITE ADDRESS:	**17051 EAST AVENUE O PALMDALE, CA 93591**
SITE TYPE:	**±78'-0" MONOPINE**

SITE INFORMATION

PROPERTY OWNER:

OWNER: F&N REAL ESTATE INVESTMENTS, INC

ADDRESS: 45549 N BEECH AVE
LANCASTER, CA 93554

CONTACT: –
PHONE: –

TOWER OWNER:

OWNER: MOBILITIE TELECOMMUNICATIONS INFRASTRUCTURE

ADDRESS: 660 NEWPORT CENTER DR.
SUITE 200
NEWPORT BEACH, CA 92660

CONTACT: –
PHONE: –

LATITUDE (NAD83):

34° 37' 1.5" N
34.61708333

LONGITUDE (NAD83):

117° 49' 31" W
-117.82527777

APN: 3071-026-021

COUNTY:

LOS ANGELES

ZONING JURISDICTION:

COUNTY OF LOS ANGELES

ZONING DISTRICT:

C-1

POWER COMPANY:

LADWP

AAV / TELCO PROVIDER

–

RF ENGINEER:

NAME: JEFF ALLEN
PHONE: (714) 617-9591
JEFFREY.ALLEN2@SPRINT.COM

SPRINT REPRESENTATIVE:

SBA COMMUNICATIONS CORPORATION
5900 BROKEN SOUND PARKWAY NW
BOCA RATON, FL 33487-2797

CONTACT: DENISE FULLER
PHONE: (720) 666-4976
EMAIL: DFULLER@SBASITE.COM

SPRINT CM:

NAME: –
PHONE: –
EMAIL: –

ARCHITECT:

DCI PACIFIC
32 EXECUTIVE PARK, SUITE 110
IRVINE, CA 92614

PHONE: (949) 475-1000
FAX: (949) 475-1001

CONTACT: D.K. DO, RA
E-MAIL: DK@DCIPACIFIC.COM

CONTACT: JOHNOAH 'BOK' YU, RA
E-MAIL: BOK@DCIPACIFIC.COM

APPROVAL	DATE	
P.M.:		
LANDLORD:		
CONST:		
S/A:		
R.F.:		
ZONING:		
A&E:		
R.F.:		

REVIEWERS SHALL CLEARLY PLACE INITIALS ADJACENT TO EACH REDLINE NOTE AS DRAWINGS ARE BEING REVIEWED

AREA MAP

LOCATION MAP

PROJECT DESCRIPTION

UPGRADE TO AN EXISTING 'SPRINT' SITE:

- INSTALL NEW 9929 GROWTH CABINET AND BATTERIES
- INSTALL (3) 2.5 GHZ PANEL ANTENNAS
- INSTALL (3) 2.5 GHZ RRH'S
- INSTALL (1) HYBRID CABLES AND JUMPERS

CODE COMPLIANCE

ALL WORK AND MATERIALS SHALL BE PERFORMED AND INSTALLED IN ACCORDANCE WITH THE CURRENT EDITIONS OF THE FOLLOWING CODES AS ADOPTED BY THE LOCAL GOVERNING AUTHORITIES. NOTHING IN THESE PLANS IS TO BE CONSTRUED TO PERMIT WORK NOT CONFORMING TO THESE CODES.

1. 2013 CALIFORNIA ADMINISTRATIVE CODE (CAC)
2. 2013 CALIFORNIA BUILDING CODE (CBC), VOLUMES 1, AND 2 (2012 EDITION INTERNATIONAL BUILDING CODE WITH 2013 CALIFORNIA AMENDMENTS)
3. 2013 CALIFORNIA ELECTRICAL CODE (2011 EDITION NATIONAL ELECTRICAL CODE WITH 2013 CALIFORNIA AMENDMENTS)
4. 2013 CALIFORNIA MECHANICAL CODE (CMC) (2012 EDITION IAPMO UNIFORM MECHANICAL CODE WITH 2013 CALIFORNIA AMENDMENTS)
5. 2010 CALIFORNIA ENERGY CODE (2008 EDITION CALIFORNIA ENERGY COMMISSION BUILDING ENERGY EFFICIENCY STANDARDS)
6. 2013 CALIFORNIA FIRE CODE (CFC) (2012 EDITION OF INTERNATIONAL FIRE CODE WITH 2010 CALIFORNIA AMENDMENTS)
7. 2013 CALIFORNIA GREEN CODE
8. 2013 CALIFORNIA REFERENCES STANDARDS CODE
9. APPLICABLE LOCAL CODES

DRAWING INDEX

SHEET	DESCRIPTION
T01	TITLE SHEET
T02	BATTERY INFORMATION
SP-1	GENERAL NOTES, LEGENDS & ABBREVIATIONS
SP-2	GENERAL SIGNAGE GUIDELINES AND COAX MARKING GUIDE
A1	OVERALL SITE PLAN / ROOF PLAN
A2	EQUIPMENT/ANTENNA LAYOUT PLAN
A3	ELEVATIONS
D1	DETAILS
E01	ELECTRICAL NOTES, SINGLE LINE DIAGRAM AND PANEL SCHEDULE
E02	GROUNDING NOTES AND DETAILS

10 TOTAL SHEETS

2.5GHz ±78'-0" MONOPINE

PLANS PREPARED FOR:

Sprint
310 COMMERCE, SUITE 250
IRVINE, CA 92602
PHONE (714) 617-9342

PLANS PREPARED BY:

DCI PACIFIC
A|E|C WORKS
ARCHITECTURE | ENGINEERING | CONSULTING
32 EXECUTIVE PARK | SUITE 110
IRVINE | CA 92614 | 949.475.1000

OEM:

SAC:

SBA
SBA COMMUNICATIONS CORPORATION
5900 Broken Sound Parkway · Boca Raton · FL 33487-2797
Phone: (800) 487-7483 Fax: (561) 226-3572

ARCHITECT LICENSE:

LICENSED ARCHITECT · STATE OF CALIFORNIA

REVISIONS:

DESCRIPTION:	DATE:	BY:	△
90% PRELIM CD	07/14/14	JGD	0
100% PRELIM CD	07/23/14	HT	1

SITE NAME:

SADDLEBACK GROCERY

SITE CASCADE:

LA70XC530

SITE ADDRESS:

17051 EAST AVENUE O
PALMDALE, CA 93591

SHEET DESCRIPTION:

TITLE SHEET

SHEET NUMBER:

T01

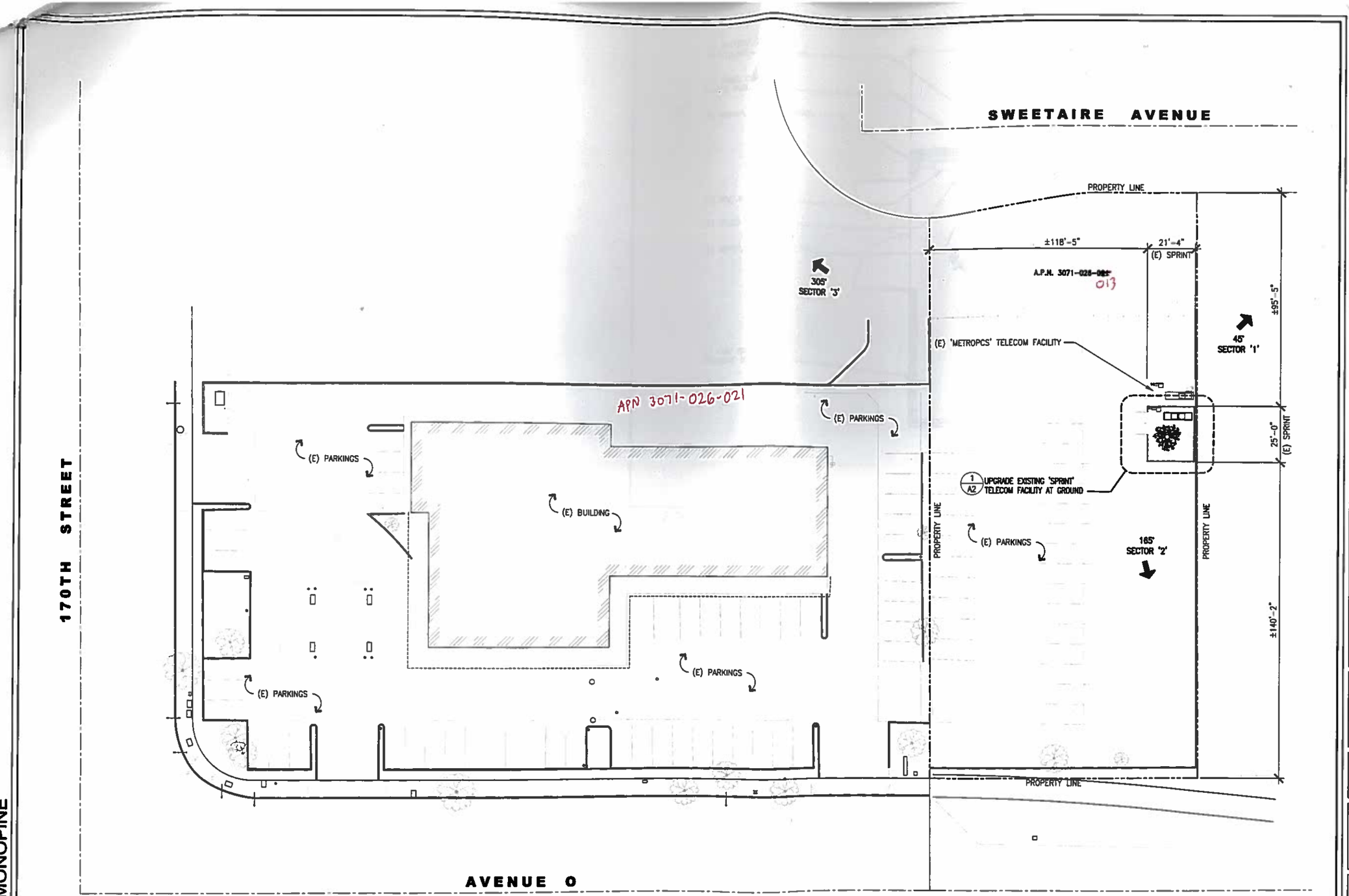

2.5GHz ±78'-0" MONOPINE

SITE PLAN

SCALE: 1"=20'

1

PLANS PREPARED FOR:

Sprint

310 COMMERCE, SUITE 250
IRVINE, CA 92602
PHONE: (714) 617-9342

PLANS PREPARED BY:

DCI PACIFIC
A|E|C WORKS

ARCHITECTURE | ENGINEERING | CONSULTING
32 EXECUTIVE PARK | SUITE 110
IRVINE | CA 92614 | 949.475.1000

OEM:

SAC:

SBA

SBA COMMUNICATIONS CORPORATION
5900 Broken Sound Parkway · Boca Raton · FL 33487-2797
Phone: (800) 487-7483 Fax: (561) 226-3572

ARCHITECT LICENSE:

LICENSED ARCHITECT
STATE OF CALIFORNIA

REVISIONS:

DESCRIPTION:	DATE:	BY:	△
90% PRELIM CD	07/14/14	JGD	0
100% PRELIM CD	07/23/14	HT	1

SITE NAME:

SADDLEBACK GROCERY

SITE CASCADE:

LA70XC530

SITE ADDRESS:

17051 EAST AVENUE O
PALMDALE, CA 93591

SHEET DESCRIPTION:

SITE PLAN

SHEET NUMBER:

A1

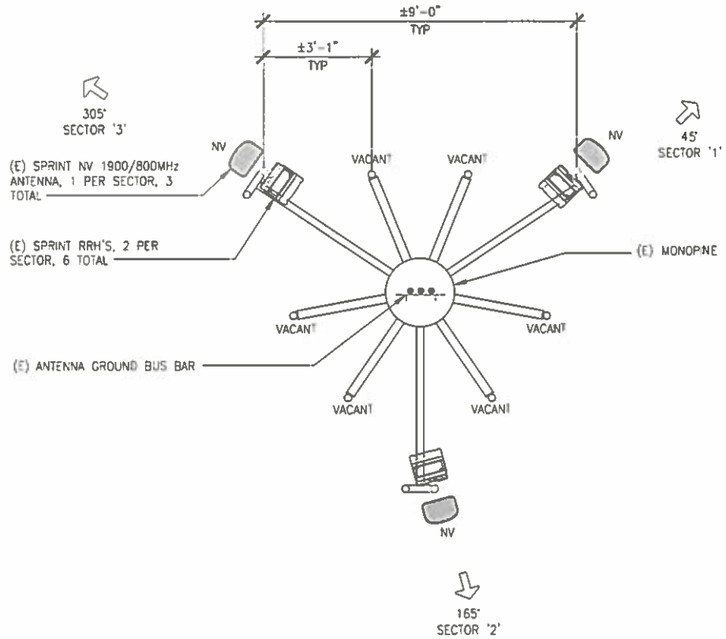

(E) ANTENNA LAYOUT PLAN

NORTH | 0 1' 2' | SCALE: 1/2"=1'-0" | 4

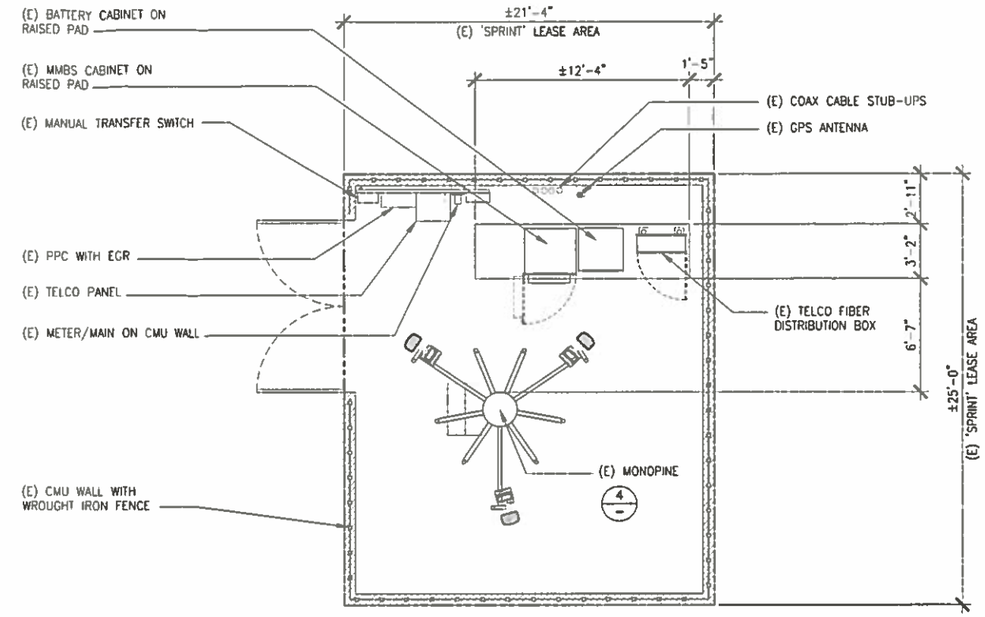

(E) EQUIPMENT LAYOUT PLAN

NORTH | 0 1' 2' 4' | SCALE: 1/4"=1'-0" | 2

NOTE:
1. THE ANTENNA EDGE DISTANCE BETWEEN A 2.5 GHz ANTENNA AND 1.9 GHz ANTENNA IS LESS THAN OR EQUAL TO 18".
2. THE ANTENNA EDGE DISTANCE BETWEEN A 2.5 GHz ANTENNA AND 800 MHz ANTENNA IS LESS THAN OR EQUAL TO 30".
3. THE ANTENNA EDGE DISTANCE BETWEEN A 1.9 GHz AND 800 MHz ANTENNA IS LESS THAN OR EQUAL TO 18".
4. THE ANTENNA EDGE DISTANCE BETWEEN A 2.5 GHz ANTENNA AND DUAL BAND 1.9 GHz AND 800 MHz ANTENNA IS LESS THAN OR EQUAL TO 30".

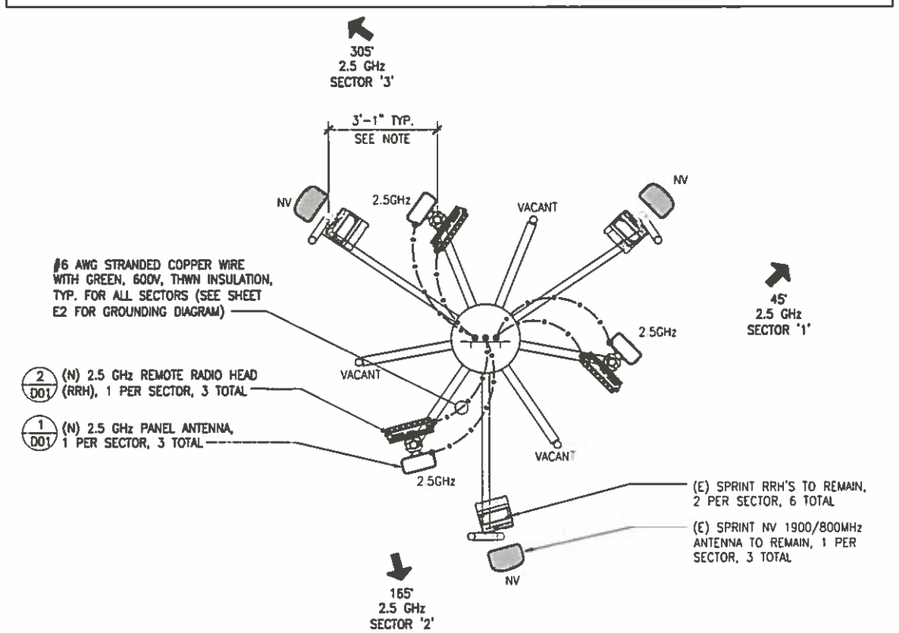

(N) ANTENNA LAYOUT PLAN

NORTH | 0 1' 2' | SCALE: 1/2"=1'-0" | 3

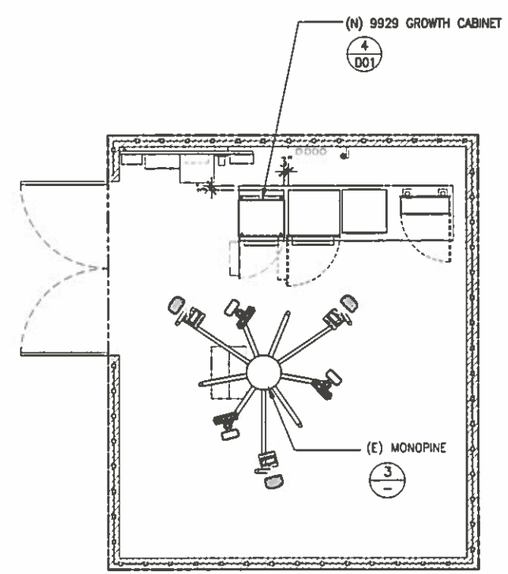

(N) EQUIPMENT LAYOUT PLAN

NORTH | 0 1' 2' 4' | SCALE: 1/4"=1'-0" | 1

2.5GHz ±78'-0" MONOPINE

PLANS PREPARED FOR:

Sprint
310 COMMERCE, SUITE 250
IRVINE, CA 92602
PHONE: (714) 617-9342

PLANS PREPARED BY:

DCI PACIFIC
A|E|C WORKS
ARCHITECTURE | ENGINEERING | CONSULTING
32 EXECUTIVE PARK | SUITE 110
IRVINE | CA 92614 | 949.475.1000

OEM:

SAC:

SBA
SBA COMMUNICATIONS CORPORATION
5900 Broken Sound Parkway · Boca Raton · FL 33487-2797
Phone: (800) 487-7483 Fax: (561) 226-3572

ARCHITECT LICENSE:

LICENSED ARCHITECT — STATE OF CALIFORNIA

REVISIONS:

DESCRIPTION:	DATE:	BY:	△
90% PRELIM CD	07/14/14	JGD	0
100% PRELIM CD	07/23/14	HT	1

SITE NAME:
SADDLEBACK GROCERY

SITE CASCADE:
LA70XC530

SITE ADDRESS:
17051 EAST AVENUE O
PALMDALE, CA 93591

SHEET DESCRIPTION:
EQUIPMENT AND ANTENNA LAYOUT PLAN

SHEET NUMBER:
A2

2.5GHz ±78'-0" MONOPINE

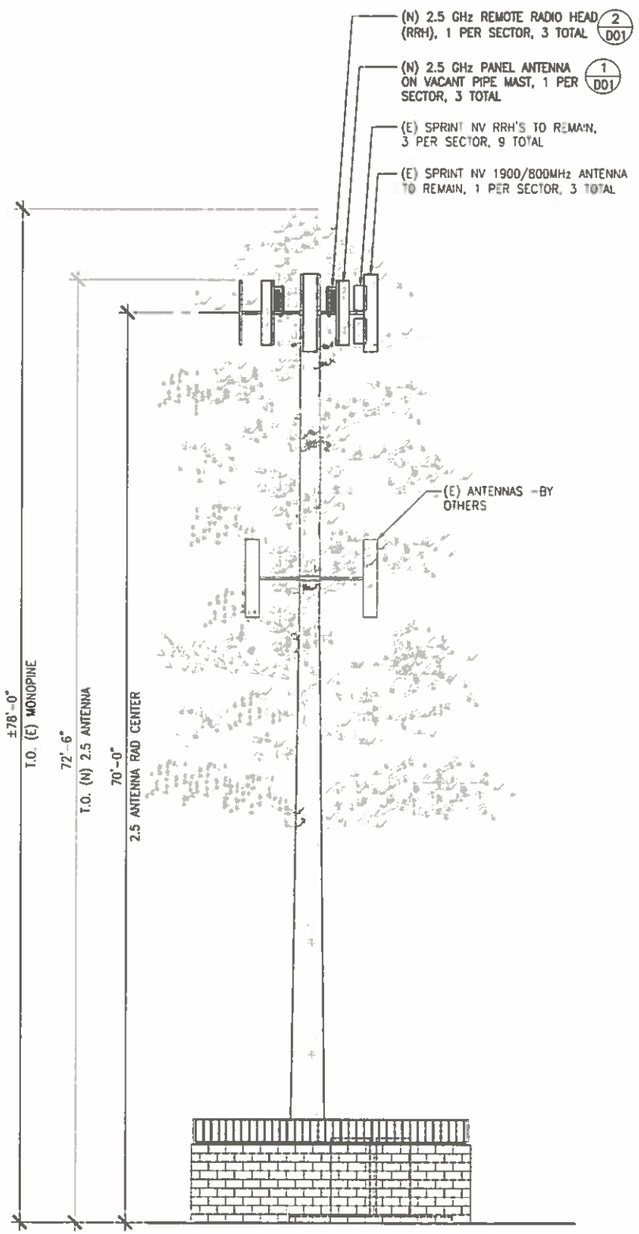

SOUTH ELEVATION

0 1' 2' 5' SCALE: 3/16 "=1'-0" 2

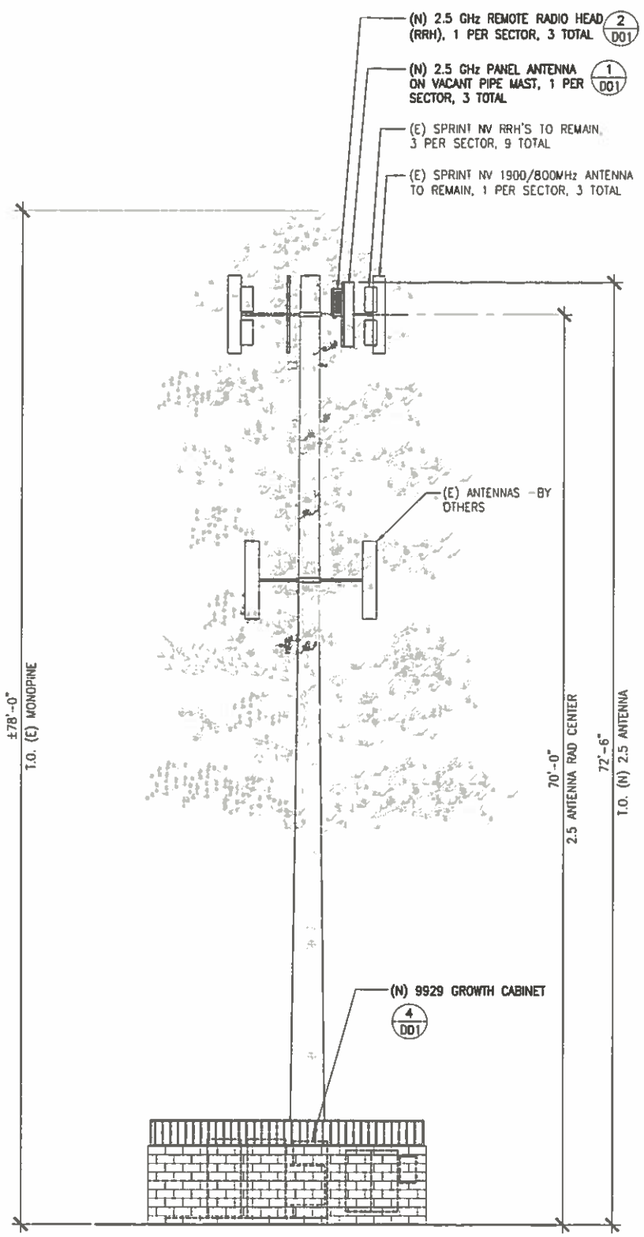

NORTH ELEVATION

0 1' 2' 5' SCALE: 3/16 "=1'-0" 1

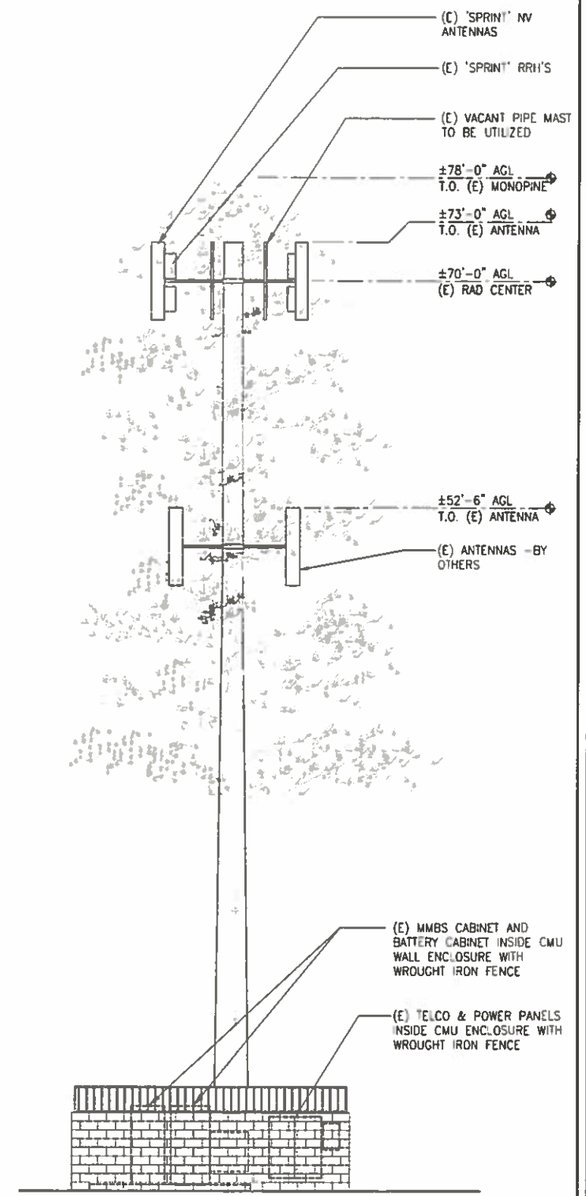

EXISTING ANTENNA NORTH ELEVATION
(FOR REFERENCE ONLY)

PLANS PREPARED FOR:

Sprint

310 COMMERCE, SUITE 250
IRVINE, CA 92602
PHONE: (714) 617-9342

PLANS PREPARED BY:

DCI PACIFIC
A|E|C WORKS

ARCHITECTURE | ENGINEERING | CONSULTING
32 EXECUTIVE PARK | SUITE 110
IRVINE | CA 92614 | 949.475.1000

DEM.

SAC:

SBA

SBA COMMUNICATIONS CORPORATION
5900 Broken Sound Parkway · Boca Raton · FL 33487-2797
Phone: (800) 487-7483 Fax: (561) 226-3572

ARCHITECT LICENSE:

LICENSED ARCHITECT · STATE OF CALIFORNIA

REVISIONS:

DESCRIPTION:	DATE:	BY:	△
90% PRELIM CD	07/14/14	JGD	0
100% PRELIM CD	07/23/14	HT	1

SITE NAME:

SADDLEBACK GROCERY

SITE CASCADE:

LA70XC530

SITE ADDRESS:

17051 EAST AVENUE O
PALMDALE, CA 93591

SHEET DESCRIPTION:

ELEVATIONS

SHEET NUMBER:

A3

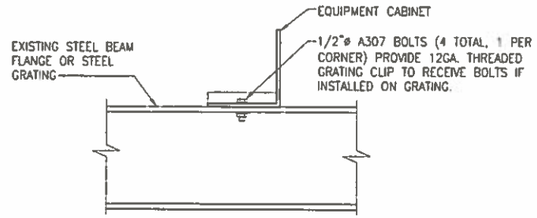

NOTES:
1. ALL STEEL PENETRATIONS/DRILL TO BE SPRAYED GALVANIZED AFTER INSTALLATION
2. VERIFY WITH CABINET MANUFACTURER FOR MOUNTING HOLE LOCATIONS

CABINET ANCHOR DETAIL

SCALE: 1 1/2" = 1' | 5

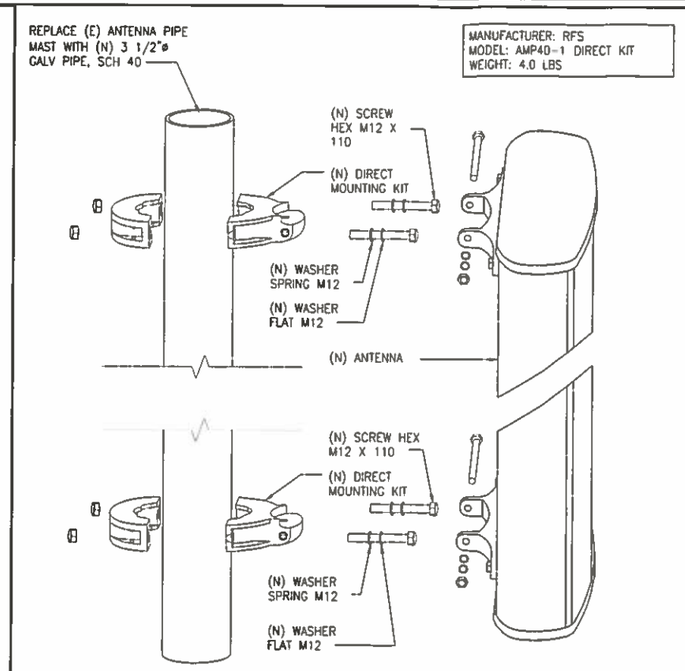

DIRECT MOUNT ASSEMBLY

TYPICAL ANTENNA MOUNT ON PIPE MAST

SCALE: N T S | 3

MANUFACTURER: ANDREW
MODEL NO: APXVTM14-C-120
CONNECTOR: (8) 4.1/9.5 DIN FEMALE
(1) NF - CALIBRATION PORT
HEIGHT: 56.3" (1430mm)
WIDTH: 12.6" (320mm)
DEPTH: 6.3" (160mm)
WEIGHT W/O BRACKET: 25.3 lbs (MAX WEIGHT 56.2lbs)
MOUNTING: PRE-MOUNTED TILT BRACKETS

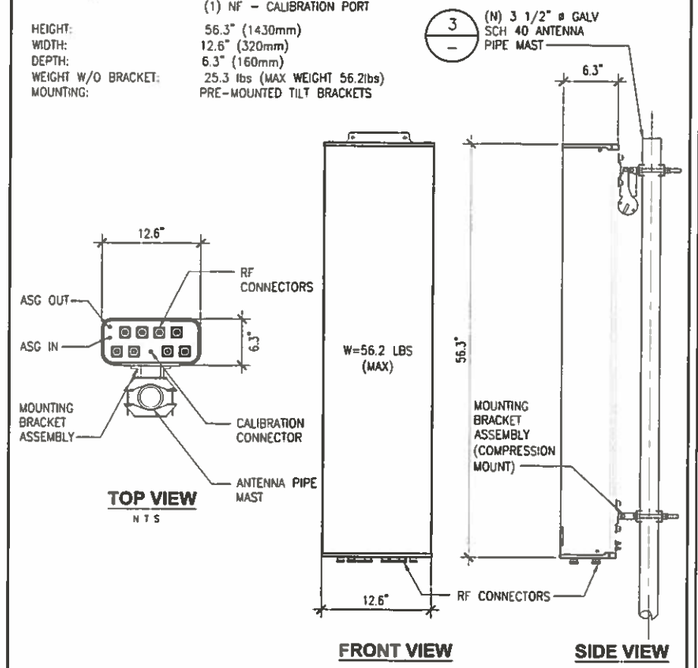

TOP VIEW
N T S

FRONT VIEW

SIDE VIEW

2.5 ANTENNA

SCALE: 1 1/2" = 1' | 1

MANUFACTURE: ALCATEL-LUCENT

MODEL #: 9929-MT-BTS

ESTIMATED MAX WEIGHT:
UNLOADED: 434 LBS
FULLY LOADED: 1600 LBS

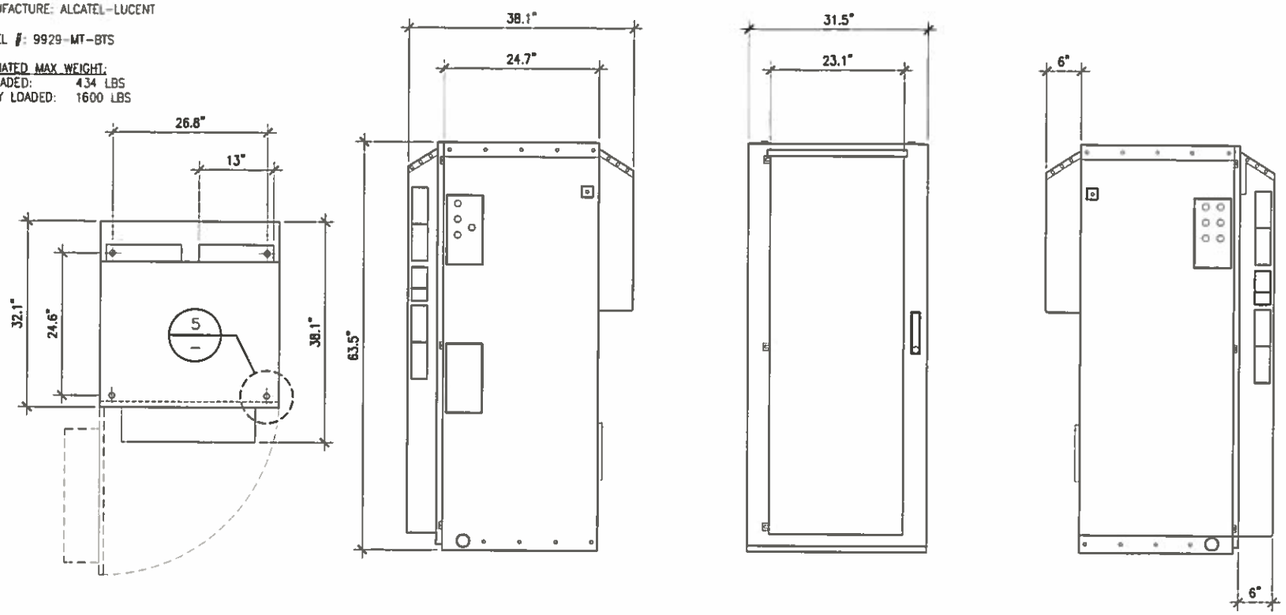

PLAN VIEW

RIGHT SIDE VIEW

FRONT VIEW

LEFT SIDE VIEW

ALU 2.5 GROWTH CABIET

SCALE: 1"=1' | 4

MANUFACTURER: ALCATEL-LUCENT
MODEL NO: TD-RRH8X20
HEIGHT: 25.5" (645mm)
WIDTH: 17.6" (445mm)
DEPTH: 5.7" (145mm)
WEIGHT W/O SOLAR SHIELD AND MOUNTING BRACKETS: 30 lbs (MAX WEIGHT 56.2lbs)

BRACKET NOTES:
1. ALLOWABLE SIZE RANGE = 50-120MM
2. USE STAINLESS STEEL 'NORD-LOCK' WASHERS FOR SECURING SCREWS
3. MATERIAL TO BE ANODIZED ALUMINUM

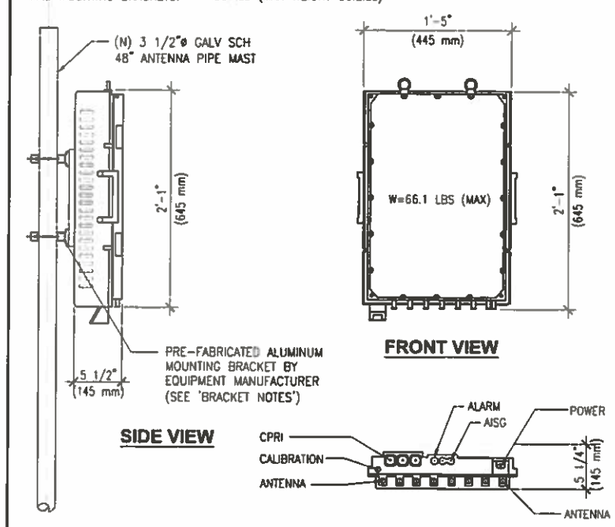

SIDE VIEW

FRONT VIEW

BOTTOM VIEW

NOTES:
COMPLY WITH MANUFACTURERS INSTRUCTION TO ENSURE THAT ALL RRU'S RECEIVE ELECTRICAL POWER WITHIN 24 HOURS OF BEING REMOVED FROM THE MANUFACTURER'S PACKAGING. DO NOT OPEN RRU PACKAGES IN THE RAIN.

2.5 REMOTE RADIO HEAD (RRH)

SCALE: 1 1/2" = 1' | 2

2.5GHz ±78'-0" MONOPINE

PLANS PREPARED FOR:
Sprint
310 COMMERCE, SUITE 250
IRVINE, CA 92602
PHONE: (714) 617-9342

PLANS PREPARED BY:
DCI PACIFIC
A|E|C WORKS
ARCHITECTURE | ENGINEERING | CONSULTING
32 EXECUTIVE PARK | SUITE 110
IRVINE | CA 92614 | 949 475.1000

OEM:

SAC:
SBA
SBA COMMUNICATIONS CORPORATION
5900 Broken Sound Parkway · Boca Raton · FL 33487-2797
Phone: (800) 487-7483 Fax: (561) 226-3572

ARCHITECT LICENSE:
LICENSED ARCHITECT
STATE OF CALIFORNIA

REVISIONS:

DESCRIPTION:	DATE:	BY:	△
90% PRELIM CD	07/14/14	JGD	0
100% PRELIM CD	07/23/14	HT	1

SITE NAME:
SADDLEBACK GROCERY

SITE CASCADE:
LA70XC530

SITE ADDRESS:
17051 EAST AVENUE O
PALMDALE, CA 93591

SHEET DESCRIPTION:
EQUIPMENT DETAILS

SHEET NUMBER:
D1