SHANCHENG LAMEIZI HOT POT

18932 E. GALE AVE., ROWLAND HEIGHTS, CA 91748

GENERAL NOTES

1. THE CONTRACTOR AND/OR SUB-CONTRACTORS SHALL VISIT AND REVIEW CONDITIONS PRIOR TO SUBMITTING BIDS.
2. THE CONTRACTOR SHALL ASSUME SOLE AND COMPLETE RESPON-SILBILITY FOR JOB SITE CONDITIONS DURING THE COURSE OF CONSTRUCTION OF THIS PROJECT INCLUDING SAFETY OF ALL PERSONS & PROPERTY. THIS REQUIREMENT SHALL APPLY CONTINUOUSLY & NOT BE LIMITED TO NORMAL WORKING HOURS. THE CONTRACTOR SHALL PROVIDE PUBLIC PROTECTION AS NECESSARY & REQUIRED BY GOVERNING CITY AGENCIES.
3. THE WORK SHALL CONFIRM TO THE APPLICABLE BUILDING CODE AND OTHER ORDINANCES CODES & REGULATIONS LISTED IN THE SPECIFICATIONS OR ON THE DRAWINGS, & REQUIRED BY LOCAL BUILDING AUTHORITIES. THE GOVERNING CODES, RULES & REGULATIONS ARE COLLECTIVELY REFERRED TO AS "THE CODE". THE CONTRACTOR SHALL REPORT ANY INCONSISTENCIES, CONFLICTS OR OMISSIONS HE MAY DISCOVER TO THE ARCHITECT FOR INTERPRETATION PRIOR TO PERFORMING THE WORK.
4. THE GENERAL CONTRACTOR SHALL VERIFY ALL CONDITIONS & DIMENSIONS ON THE JOB SITE & REPORT ANY & ALL DISCREPANCIES AND/OR UNUSUAL CONDITIONS TO THE DESIGNER PRIOR TO FINALIZING BIDS OR COMMENCEMENT OF ANY CONSTRUCTION.
5. TRADE NAMES AND MANUFACTURES REFERRED TO ARE FOR QUALITY STANDARDS ONLY. SUBSTITUTIONS WILL BE PERMITTED WHERE SUBMITTED TO AND APPROVED BY THE OWNER & DESIGNER PRIOR TO THEIR PURCHASE AND INCORPORATION INTO THE WORK.
6. PROVIDE APPROVED FIRE EXTINGUISHERS AS REQUIRED BY FIRE MARSHALL. LOCATIONS SHALL BE DETERMINED IN THE FIELD BY THE FIRE MARSHALL.
7. THE CONTRACTOR SHALL OBTAIN & PAY FOR ALL PERMITS & VERIFY GOVERNING AUTHORITIES' REQUIREMENTS FOR CONSTRUCTION.
8. THE CONTRACTOR SHALL BE RESPONSIBLE FOR ALL COSTS FOR INSPECTIONS AND/OR TESTS, UNLESS NOTED OTHERWISE.
9. ALL RAMPS SHALL HAVE A NON-SLIP FINISH.
10. DO NOT SCALE THESE DRAWINGS. SHOULD ANY DIMENSIONAL DISCREPANCIES BE ENCOUNTERED, CLARIFICATIONS SHALL BE OBTAIN FROM THE DESIGNER.
11. UNLESS OTHERWISE NOTED ON THESE DRAWINGS OR IN THE SPECIFICATIONS AS BEING N.I.C. OR EXISTING, ALL ITEMS, MATERIALS, etc.,& THE INSTALLATION OF SAME ARE A PART OF THE CONTRACT DEFINED BY THESE DRAWING SPECIFICATIONS.
12. THE BUILDING & ITS FACILITIES SHALL BE ACCESSIBLE TO & FUNCTIONAL TO THE PHYSICALLY HANDICAPPED.
13. PROVIDE EXIT SIGNS AT ALL LEGAL EXITS AS REQUIRED BY CODE. EXIT SIGNS, WHERE, INDICATED ON PLANS, SHALL BE ILLUMINATED & READ "EXIT" IN 6" HIGH LETTERS. EXITS SIGNS SHALL BE ON CIRCUIT & INDEPENDENTLY CONTROLLED. REFER TO ELECTRICAL DRAWINGS.
14. DETAILS ARE INTENDED TO SHOW THE INTENT OF THE DESIGN. MINOR MODIFICATIONS MAY REQUIRED TO SUIT THE FIELD DIMENSIONS OR CONDITIONS & SUCH MODIFICATION SHALL BE INCLUDED AS PART OF THE WORK OF THE CONTRACT.
15. ALL INTERIOR WALL DIMENSIONS ARE TO THE FACE OF THE STUD UNLESS OTHERWISE NOTED.
16. ALL EXTERIOR WALL DIMENSIONS ARE TO FACE OF CONCRETE BLOCK OR TO FACE OF STUD, UNLESS OTHERWISE NOTED.
17. THE CLIENT, DESIGNER, CONSULTANTS & ALL INSPECTORS FROM PERTINENT AGENCIES SHALL BE PERMITTED ACCESS TO THE JOB SITE AT ALL TIMES DURING NORMAL WORKING HOURS.
18. THE CONTRACTOR SHALL PROVIDE SOLID BLOCKING, UNLESS NOTED OTHERWISE AS REQUIRED FOR NAILING OF ALL INTERIOR & EXTERIOR TRIMS, FINISHES, AND SHALL PROVIDE FOR ALL THE NECESSARY FRAMING & BRACING FOR THE INSTALLATION OF N.I.C. EQUIPMENT INDICATED.
19. PROVIDE VENTILATION FOR ALL ELECTRICAL & TELEPHONE EQUIPMENT ROOMS.
20. MECHANICAL VENTILATION SHALL SUPPLY A MINIMUM 5 CFM OF OUTSIDE AIR, EXCEPT IN TOILET ROOMS WHERE FIVE (5) AIR CHANGES PER HOUR SHALL BE PROVIDED. SYSTEM MUST PROVIDE A TOTAL CIRCULATION OF NOT LESS THE 15 CUBIC FEET PER MINUTE PER OCCUPANT IN ALL PORTIONS OF THE BUILDING. REFER TO MECHANICAL DRAWINGS.
21. PROVIDE METAL TRIM OR CASING AT ALL EDGES OF PLASTER OR DRYWALL WHERE IT TERMINATES OR MEETS ANY OTHER MATERIAL, EXCEPTS FLOORS.
22. THE CONTRACTOR SHALL VERIFY LOCATION & SIZE OF ALL FLOOR, ROOF, & WALL OPENINGS WITH ALL APPLICABLE DRAWINGS.
23. KEEP PIPING AS CLOSE TO WALLS & AS HIGH TO UNDERSIDE OF ROOF FRAMING AS POSSIBLE.
24. WHERE LARGER STUDS OR FURRING ARE REQUIRED TO COVER DUCTS, PIPING CONDUIT, etc., THE LARGER STUD OR FURRING SHALL EXTEND THE FULL LENGTH OF THE SURFACE INVOLVED.
25. THE CONTRACTOR SHALL VERIFY INSERTS & EMBEDDED ITEMS W/ ALL APPLICABLE DRAWINGS BEFORE POURING CONCRETE.
26. ALL EXTERIOR EXPOSED METAL (TRIMS, RAILING, FRAMES, MOLDINGS etc.) SHALL BE PAINTED, UNLESS NOTED OTHERWISE.
27. IN ALL CASES, PROVIDE ISOLATION OF ALUMINUM FROM ADJACENT STEEL OR COAT SURFACES IN CONTACT WITH BITUMINOUS PAINT.
28. ALL EXTERIOR WALL OPENINGS, FLASHING, COPING, & EXPANSION JOINTS SHALL BE WEATHERPROOF.
29. ALL ROOF DRAINS SHALL BE LOCATED AT THE LOWEST POINT OF THE ROOF TAKING INTO CONSIDERATION THE CAMBER OF BEAMS & DEFLECTION OF CANTILEVERS. CONTRACTOR SHALL VERIFY THAT POSITIVE DRAINAGE EXISTS FROM ALL POINTS ON ROOF PRIOR TO INSTALLING DECK.
30. SIZES OF MECHANICAL EQUIPMENT PADS, BASES, ROOF EQUIPMENT PADS, & OPENINGS ARE BASIS FOR DESIGN ONLY. CONTRACTOR SHALL VERIFY ALL DIMENSIONS OF ALL EQUIPMENT PADS & BASES WITH EQUIPMENT MANUFACTURERS. MECHANICAL CONTRACTORS SHALL VERIFY ALL SIZES & LOCATIONS OF DUCT OPENINGS ON ROOF.
31. GLAZING NOTES:
   - A. ALL FIXED & OPENABLE WINDOWS FROM ZERO TO 50 SQ. FT IN AREA SHALL HAVE 3/8" MINIMUM GLASS GRIP & 1/4 MINIMUM GLASS EDGE CLEARANCE.
   - B. ALL FIXED & OPENABLE WINDOWS OVER 50 SQ. FT. IN AREA SHALL HAVE 1/2 MINIMUM GLASS GRIP & 1/4 MINIMUM GLASS EDGE CLEARANCES.
   - C. GLAZING IN ALUMINUM DOORS SHALL HAVE 3/8" MINIMUM GLASS GRIP & 3/8 MINIMUM GLASS EDGE CLEARANCE.
   - D. ALL WINDOWS & DOOR GLAZING SHALL HAVE CONTINUOUS GLAZING RABBET & GLASS RETAINER & RESILIENT SETTING MATERIAL.
32. SUSPENDED ACOUSTICAL CEILING SYSTEMS SHALL BE INSTALLED IN ACCORDANCE WITH 2001 UBC TABLE 16-O.
33. THE BUILDING SHALL BE COMPLETELT SPRINKLED WITH AN AUTOMATIC FIRE EXTINGUISHING SYSTEM AS APPROVED BY THE GOVERNING FIRE DEPARTMENT, BUILDING DEPARTMENT, AND THE OWNER'S FIRE INSURANCE RATING BUREAU. COPIES OF FIRE DEPART-MENT & INSURANCE BUREAU APPROVED PLANS SHALL BE SUBMITTED TO THE BUILDING DEPARTMENT FOR CHECKING & APPROVAL PRIOR TO INSTALLATION. THE CONTRACTOR SHALL BE RESPONSIBLE FOR DESIGN & CONSTRUCTION OF A COMPLETE SYSTEM, FROM CONNECTION TO THE SITE WATER MAIN (OR SITE FIRE SERVICE VAULT WHERE PROVIDED) TO THE BUILDING INTERIOR SPRINKLER DISTRIBU-TION. REFER TO SITE UTILITY PLANS. ALL SPRINKLER LINES SHALL RUN CONCEALED IN ALL FINISHED, AREAS, INTERFERENCE WITH LIGHTS, DUCTS, PIPES, etc. SHALL BE AVOIDED. EXPOSED PIPING IN FINISHED AREAS WILL NOT BE ACCEPTABLE. AUTOMATIC FIRE EXTINGUISHERS SYSTEM MUST BE FULLY OPERATIONAL & ENERGIZED PRIOR TO FIXTURIZATION OF THE BUILDING.
34. FIRE SPRINKLER PLAN UNDER SEPARATE PERMIT.

FIRE DEPARTMENT NOTES

1. AUTOMATIC FIRE EXTINGUISHING SYSTEM(S) IN THE GREASE HOOD AND DUCT ARE REQUIRED IN THE KITCHEN AREA. SUBMIT SHOP DRAWINGS AND A PERMIT APPLICATION TO THE ROWLAND HEIGHTS FIRE DEPARTMENT FOR APPROVAL.
2. K CLASS FIRE EXTINGUSHER(S) WITHIN 30 FEET OF COOKING INVOLVING VEGETABLE OR ANIMAL OIL AND FATS (SUCH AS DEE FAT FRYERS), AS MEASURED ALONG AN UNOBSTRUCTED PATH OF TRAVEL, ARE REQUIRED IN THE KITCHEN AREA.
3. PANIC HARDWARE OR FIRE EXIT HARDWARE (RATED PANIC HARDWARE)AS APPLICABLE, ARE REQUIRED ON ALL EXIT DOOR FORM ASSEMBLY AREAS/ ROOMS.
4. ASSEMBLY PERMIT IS REQUIRED. CONTACT THE BUREAU OF FIRE PREVENTION AT FIRE DEPARTMENT FOR INFORMATION.
5. ALL PORTIONS OF THE BUILDING SHALL BE WITHIN 75 FEET OF A FIRE EXTINGUISHER. THE MINIMUM SIZE OF THE EXTINGUISHER SHALL BE 2-A:10-BC.
6. TACTILE EXIT SIGNS SHALL BE PROVIDED AS REQUIRED TO COMPLY WITHIN SECTION 1003.2.8.6.
7. EMERGENCY LIGHTING PER SECTION 1003.2.9.2 IS REQUIRED.
8. EACH SINGLE SYSTEM PROVIDING HEATING OR COOLING AIR IN EXCESS OF 2,000 CUBIC FEET PER MINUTE SHALL BE EQUIPPED WITH AN AUTOMATIC SHUTOFF ACTIVATED BY SMOKE DETECTORS.
9. COMBINATION FIRE/ SMOKE DAMPERS (FSD'S) SHALL BE PROVIDED AS REQUIRED TO COMPLY WITH SECTIONS 713.10 & 713.11.
10. FIRE SPRINKLER PLAN UNDER SEPARATE PERMIT. ALTER THE SPRINKLER SYSTEM AS NEEDED BY NEW PARTITIONS, FLOORS AND CEILINGS. SUBMIT SHOP DRAWINGS (3 SETS) AND A PERMIT APPLICATION TO THE ROWLAND HEIGHTS FIRE DEPARTMENT FOR APPROVAL BEFORE ALTERING THE SYSTEM.
11. A MANUAL FIRE SPRINKLER SYSTEM AS REQUIRED FOR GROUP A, DIVISION A 2.1 OCCUPANCIES SHALL BE PROVIDED. SUBMIT SHOP DRAWINGS (3 SETS) AND A PERMIT APPLICATION TO THE ROWLAND HEIGHTS FIRE DEPARTMENT FOR APPROVAL BEFORE ALTERING THE SYSTEM.
12. THE ROWLAND HEIGHTS FIRE DEPARTMENT MUST BE CONTACTED A MINIMUM OF 7-10 DAYS IN ADVANCE TO SCHEDULE INSPECTIONS.
13. MISSING FIREPROOFING MATERIAL MUST BE REPLACED BEFORE CONSTRUCTION FINAL.
14. PENETRATIONS INTO, OR THROUGH, FIRE RESISTIVE CONSTRUCTION MUST ABLE FIRESTOPPED IN ACCORDANCE WITH CBS, CHAPTER 7.
15. PREMISE IDENTIFICATION NUMBERS SHALL BE MOUNTED ON THE FRONT AND REAR DOORS.
16. DEMOLITION AND CONSTRUCTION SAFETY MUST COMPLY WITH CFC, ARTICLE 87 AND CBC CHAPTER 33.
17. PLACEMENT OF PORTABLE FIRE EXTINGUISHERS SHALL BE DETERMINED BY THE FIRE INSPECTOR. EQUIPMENT MUST BE MOUNTED BEFORE CONSTRUCTION FINAL. MINIMUM RATING IS 2A10BC.
18. FIRE ALARM, SPRINKLER MODIFICATIONS, AWNINGS, KITCHEN HOOD FIRE PROTECTION SYSTEMS, KITCHEN HOOD CANOPY AND DUCTING, CERAMIC DUCT WRAP, VEHICLE AND PEDESTRIAN GATING, EVACUATION PROCEDURES AND MAPS, ASBESTOS REMOVAL, UNDERGROUND OR ABOVE GROUND TANKS AND ACCESSORIES, FIRE HYDRANT AND UNDERGROUND PIPING INSTALLATIONS AND OTHER NON-STRUCTRAL BUILDING ELEMENTS ARE PERMITTED SEPARATELY BY THE FIRE DEPARTMENT. A LIST OF DEFERRED SUBMITTALS SHALL APPEAR ON THE COVER PAGE OF THE DRAWING. SUBMIT A MINIMUM OF 3 SETS OF DRAWINGS FOR REVIEW AND APPROVAL PRIOR TO START OF INSTALLATION.
19. ALL FIRE DEPARTMENT FEES SHALL BE REVIEWED, APPROVED AND PAID AT FIRE ADMINISTRATION (IF THERE IS A BALANCE) BEFORE CONSTRUCTION FINAL OR ISSUANCE OF TEMPORARY OCCUPANCY.
   - A. PLAN REVIEW
   - B. EXPEDITE PLAN REVIEW OR INSPECTIONS
   - C. FIRE PROTECTION INSPECTIONS IN EXCESS OF 2 INSPECTIONS
   - D. ALL CONSTRUCTION INSPECTIONS
   - E. NON-COMPLIANCE FEES
   - F. ADDITIONAL ACCUMULATED FEES RELATED TO THE ABOVE ITEMS
20. A LOCK BOX MUST BE INSTALLED AT A LOCATION DETERMINED BY THE FIRE INSPECTOR. APPLICATIONS ARE AVAILABLE FROM FIRE ADMINISTRATION. INSTALLATION SHALL BE COMPLETED BEFORE CONSTRUCTION FINAL.
21. DECORATIVE MATERIALS AND FINISHES SHALL COMPLY WITH C.C.R. TITLE 19, SECTION 3.08 AND CBC, CHAPTER 8 REQUIREMENTS.
22. A COPY OF THE GREASE PICK-UP SCHEDULE WILL BE PROVIDED AT TIME OF KITCHEN HOOD FIRE PROTECTION TESTING.
23. TWO COPIES OF THE AIR BALANCE REPORT FOR EXHAUST/MAKE-UP AIR BALANCE WILL BE PROVIDED AT TIME OF KITCHEN HOOD FIRE PROTECTION TESTING.

PROJECT DATA

APN:	8264-021-014
SITE LOCATION:	18904 E. GALE AVE ROWLAND HEIGHTS, CA 91748
ZONE:	C
OCCUPANCY GROUP:	A-2
CONSTRUCTION TYPE:	TYPE V-B
PROJECT AREA EXISTING BUILDING SIZE:	3323 SQ. FT
FIRE SPRINKLER:	NO
NOTE:	

APPLICABLE BUILDING CODES:

- 2013 CBC, CALIFORNIA BUILDING CODE
- 2013 CMC, CALIFORNIA MECHANICAL CODE
- 2013 CFC, CALIFORNIA FIRE CODE
- 2013 CPC, CALIFORNIA PLUMBING CODE
- 2013 CEC, CALIFORNIA ELECTRICAL CODE
- CAIFORNIA CODE OF REGULATION, TITLE 24
- 2013 ENERGY COMPLIANCE CRITERIA

2014 LOS ANGELES COUNTY BLDG, ELECTRICAL, PLUMBING, MECHANICAL AND CITY AMENDAMENTS

SHEET INDEX

ARCHITECTURAL

- A-0.1 TITLE SHEET, SITE PLAN AND GENERAL NOTES
- A-1.1 EXISTING SITE PLAN
- A-2.1 EXISTING AND DEMOLITION PLAN
- A-2.2 PROPOSED FLOOR PLAN
- A-2.3 PROPOSED EQUIPMENT PLAN
- A-3.1 PROPOSED ELEVATIONS

CONSULTANTS

TENANT: SHANCHENG LAMEIZI DINING CO., LTD.
18932 E. GALE AVE
ROWLAND HEIGHTS, CA 91748

ENGINEER: JWL ASSOCIATES, INC.
1221 S. HACIENDA BLVD.
HACIENDA HEIGHTS, CA 91745
TEL: (626) 956-0168
FAX: (626) 369-8978
CONTACT: JOHN SUN

SCOPE OF WORK

1. TENANT IMPROVEMENT EXISTING RESTAURANT SPACE (3323 SQ.FT.)
2. EXTERIOR FACADE RENOVATION.

VICINITY MAP

N.T.S.

ABBREVIATIONS

- AC. T. -ACOUSTIC TILE
- AFF -ABOVE FINISH FLOOR
- ALT -ALTERNATE
- ALUM -ALUMINUM
- ANCH -ANCHOR
- APPROX -APPROXIMATELY
- ARCH -ARCHITECT/ARCHITECTURAL
- BR. CS. -BRICK COURSE
- BLDG -BUILDING
- BLK -BLOCK
- B.M. -BENCH MARK
- BM -BEAM
- B.N. -BULL NOSE
- BNT -BENT
- BMT -BOTTOM
- C.B. -CATCH BASIN
- CEM -CEMENT
- CER. T. -CERAMIC TILE
- C.J. -CONTROL JOINT
- CLR. -CLEAR
- CLG -CEILING
- CMU -CONCRETE MASONRY UNIT
- COL -COLUMN
- COMP. -COMPOSITION
- CONC. -CONCRETE
- CONSTR. -CONSTRUCTION
- CONT. -CONTINUOUS
- CONTR. -CONTRACTOR
- CTR. -CENTER
- DET. -DETAIL
- D.F. -DRINKING FOUNTAIN
- DIA. -DIAMETER
- DIM -DIMENSION
- D.O. -DOOR OPENING
- DS -DOWNSPOUT
- DWG -DRAWING
- EIFS -EXT. INSULATION & FINISH SYSTEM
- EL -ELEVATION (SEA LEVEL)
- ELEC. -ELECTRICAL
- ELEV. -ELEVATION
- EXP -EXPANSION
- E.J. -EXPANSION JOINT
- EXT -EXTERIOR
- F.D. -FLOOR DRAIN
- F.E. -FIRE EXTINGUISHER
- FIN -FINISH
- FLR -FLOOR
- FDN -FOUNDATION
- FOM -FACE OF MASONRY
- FPHB -FROST PROOF HOSE BIBB
- F.S. -FULL SIZE OR FLOOR SINK
- FTG -FOOTING
- FURR -FURRING
- FVC -FIRE VALVE CABINET
- GA. -GAUGE
- GALV. -GALVANIZED
- GEN -GENERAL
- GRFC -GLASS FIBER REINFORCED CONCRETE
- GRFG -GLASS FIBER REINFORCED GYPSUM
- GL -GLASS/GLAZING
- G.S. -GRAVEL STOP
- GYP. BD. -GYPSUM BOARD
- HDWE -HARDWARE
- HB -HOSE BIBB
- H.M. -HOLLOW METAL
- HYD -HYDRANT
- I.D. -INSIDE DIAMETER
- INSUL -INSULATION
- JT -JOINT
- LAV -LAVATORY
- LG. -LONG
- LLH -LONG LEG HORIZONTAL
- LLV -LONG LEG VERTICAL
- L.P. -LOW POINT/LIGHT PANEL
- LT -LIGHT
- MAR -MARBLE
- MAS -MASONRY
- MAX -MAXIMUM
- MECH. -MECHANICAL
- MTL -METAL
- MFR -MANUFACTURER
- MH -MANHOLE
- MIN. -MINIMUM
- MISC. -MISCELLANEOUS
- M.O. -MASONRY OPENING
- METTHRES. -METAL THRESHOLD
- NIC -NOT IN CONTRACT
- NO -NUMBER
- O/A -OVERALL
- O/C -ON CENTER
- O.D. -OUTSIDE DIAMETER
- OH -OVERHELD
- O/O -OUT TO OUT
- OPNG -OPENING
- PC -PIECE
- PL -PLATE
- PLAS -PLASTER
- PLBG -PLUMBING NUMBER
- PLYWD -PLYWOOD
- POL -POLISHED
- PROJ -PROJECT
- PTD -PAINTED
- R -RADIUS
- RAILG
- R.D. -ROOF DRAIN
- REINF. -REINFORCEMENT/REINFORCED
- REQD. -REQUIRED
- RM -ROOM
- R.O. -ROUGH OPENING
- S -SINK
- SHT. -SHEET
- S.M. -SHEET METAL
- SQ. -SQUARE
- SPM -SINGLE PLY MEMBRANE
- S.S. -SLOP/SERVICE SINK
- S. STL -STAINLESS STEEL
- STD -STANDARD
- STRUCT. -STRUCTURAL
- SUSP -SUSPENDED
- T/ -TOP OF
- T.D. -TRENCH DRAIN
- TERR -TERRAZZO
- TYP -TYPICAL
- VCT -VINYL COMPOSITION TILE
- W.C. -WATER CLOSET
- WD -WOOD
- WT -WEIGHT
- WWF -WELDED WIRE FABRIC

REFERENCE SYMBOLS

- XX / AX.X — DETAIL IDENFICATION NUMBER / SHEET NUMBER
- XX / AX.X — SECTION REFERENCE / SHEET NUMBER
- 1, 2, 3, 4 XX / AX.X — INTERIOR ELEVATION REFERENCE / SHEET NUMBER
- XX / AX.X — DETAIL REFERENCE NUMBER / SHEET NUMBER
- XX / AX.X — DETAIL REFERENCE NUMBER / SHEET NUMBER
- ## — WINDOW REFERENCE
- ## — DOOR REFERNCE
- LX — LAUNDRY FIXTURE / APPLIANCE REFERENCE
- KX — BATHROOM FIXTURE & ACCESSORIES REFERENCE
- ## — GENERAL NOTE REFERENCE
- KX — KITCHEN FIXTURE / APPLANCE REFERENCE

ATTACHMENT A

PUBLIC WORKS

BEST MANAGEMENT PRACTICES FOR CONSTRUCTION ACTIVITIES*

Storm Water Pollution Control Requirements for Construction Activities
Minimum Water Quality Protection Requirements for All Development Construction Projects/Certification Statement

The following is intended as minimum notes or as an attachment for building and grading plans and represent the minimum standards of good housekeeping that must be implemented on all construction sites regardless of size. (Applies to all permits)

- Every effort should be made to eliminate the discharge of non-stormwater from the project site at all times.
- Eroded sediments and other pollutants must be retained on site and may not be transported from the site via sheetflow, swales, area drains, natural drainage courses or wind.
- Stockpiles of earth and other construction related materials must be protected from being transported from the site by the forces of wind or water.
- Fuels, oils, solvents and other toxic materials must be stored in accordance with their listing and are not to contaminate the soil and surface waters. All approved storage containers are to be protected from the weather. Spills must be cleaned up immediately and disposed of in a proper manner. Spills may not be washed into the drainage system.
- Excess or waste concrete may not be washed into the public way or any other drainage system. Provisions shall be made to retain concrete wastes on site until they can be disposed of as solid waste.
- Trash and construction related solid wastes must be deposited into a covered receptacle to prevent contamination of rainwater and dispersal by wind.
- Sediments and other materials may not be tracked from the site by vehicle traffic. The construction entrance roadways must be stabilized so as to inhibit sediments from being deposited into the public way. Accidental depositions must be swept up immediately and may not be washed down by rain or other means.
- Any slopes with disturbed soils or denuded of vegetation must be stabilized so as to inhibit erosion by wind and water.

"I certify that this document and all attachments were prepared under my direction or supervision in accordance with a system designed to ensure that qualified personnel properly gather and evaluate the information submitted. Based on my inquiry of the person or persons who manage the system or those persons directly responsible for gathering the information, to the best of my knowledge and belief, the information submitted is true, accurate, and complete. I am aware that submitting false and/or inaccurate information, failing to update the ESCP to reflect current conditions, or failing to properly and/or adequately implement the ESCP may result in revocation of grading and/or other permits or other sanctions provided by law."

Print Name ____________________
(Owner or authorized agent of the owner)

Signature ____________________ Date __________
(Owner or authorized agent of the owner)

JWL ASSOCIATES INC

ARCHITECTURAL & ENGINEERING
1221 S. HACIENDA BLVD.
HACIENDA HEIGHTS, CA 91745
TEL: (626) 956-0168
FAX: (626) 369-8978

PROPOSED FOR:
SHANCHENG LAMEIZI HOT POT
18932 E. GALE AVE.
ROWLAND HEIGHTS, CA 91745

REGISTERED PROFESSIONAL ENGINEER
43144
Exp. 03-31-16
CIVIL
STATE OF CALIFORNIA

SHEET TITLE:
GENERAL NOTES, PROJECT INFORMATION

Issue Date: 08-03-15

Revisions		
No.	Date	Description
1		
2		
3		

Project No: 2015_0036	Drawn By: J.S.
Designer: J.S.	Checked By:

Sheet Number:
A-0.1

PERMIT SET, NOT FOR CONSTRUCTION BID

FIRE DEPARTMENT NOTES

1. ALL DRAPES, HANGINGS, CURTAINS, DROPS AND ALL OTHER DECORATIVE MATERIAL TO COMPLY WITH FIRE CODE SECTION 1103.3.3.
2. PROVIDE AN APPROVED FIXED FIRE EXTINGUISHER SYSTEM FOR THE KITCHEN HOOD, DUCTS, AND COOKING SURFACES. INDICATE U.L. APPROVAL, SYSTEM NUMBER, AND SUBMIT U.L. APPROVED SCHEMATIC DRAWING TO AREA INSPECTION UNIT. (FIRE CODE SECTION 1006.2)
3. INTERIOR FINISH SHALL BE PROVIDED IN ACCORDANCE WITH TITLE 24 SECTION 804, AS FOLLOWS: CLASS I VERTICAL ENCLOSURE; CLASS II CORRIDORS; CLASS III ROOMS.
4. THE MAIN EXIT SHALL COMPLY WITH TITLE 24, SECTION 1007.2.1
5. THE MAXIMUM OCCUPANT LOAD FOR AN ASSEMBLY USE SHALL NOT EXCEED THE OCCUPANT LOAD AS DETERMINED IN ACCORDANCE WITH TITLE 24 SECTION 1003.2.2, TITLE 1003.2.2, TABLE 10A
6. PROVIDE APPROVED PANIC HARD WARE ON REQUIRED EXIT DOORS, TITLE 24 SECTION 1007.2.5.& 1003.3.1.9.
7. COMPLY WITH POSTING OF ROOM CAPACITY. FIRE CODE 2501.16.1 TITLE 24, SECTION 1007.2.6. (SUBJECT TO FIELD INSPECTION APPROVAL)
8. PROVIDE AN EXTRA SEATING PLAN FOR FIRE DEPARTMENT USE. INDICATE PROPOSED AISLES THAT COMPLY WITH FIRE CODE SECTION 2501.9 AND 2501.14.
9. EXIT DOORS SHALL SWING IN THE DIRECTION OF EGRESS.
10. EXITS, EXIT ACCESS DOORS AND PATHS OF EGRESS TRAVEL THAT IS NOT IMMEDIATELY VISIBLE TO THE OCCUPANTS SHALL BE MARKED BY AN APPROVED EXIT SIGN THAT IS READILY VISIBLE FROM ANY DIRECTION OF EGRESS TRAVEL. EXIT SIGNS SHALL BE INTERNALLY OR EXTERNALLY ILLUMINATED. BUILDING CODE 1011.

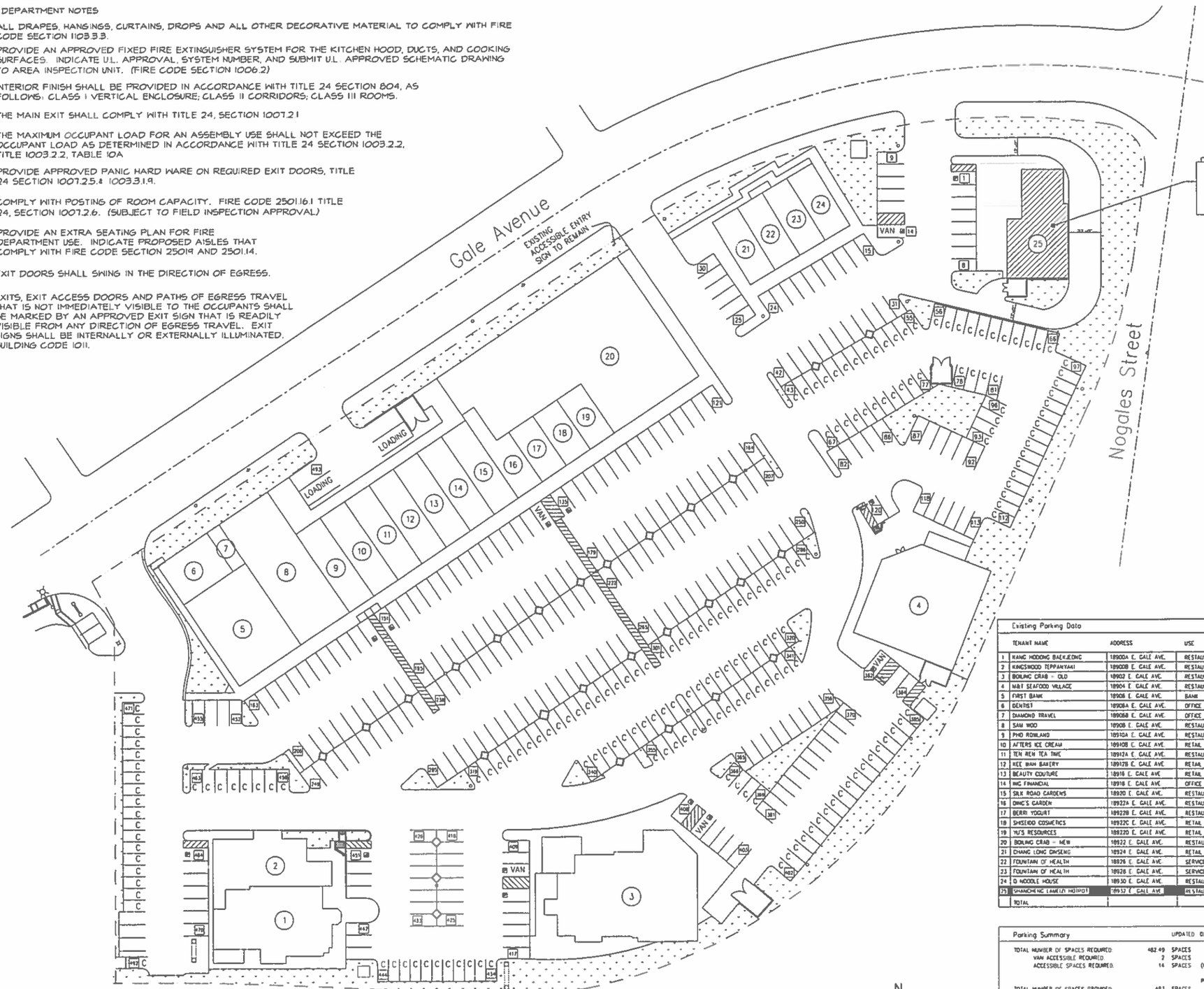

SITE PLAN
SCALE 1/32" = 1'-0"

N

LEGEND

EXISTING LANDSCAPE

PROPOSED AREA

Existing Parking Data

	TENANT NAME	ADDRESS	USE	AREA (SF)	OCC. LOAD	PARKING RATIO	SPACES RATIO	REMARKS
1	KANG HODONG BAEKJEONG	18900A E. GALE AVE.	RESTAURANT	4,250	147	1/3 OCC. (MIN. 10)	49.00	-
2	KINGSWOOD TEPPANYAKI	18900B E. GALE AVE.	RESTAURANT	2,765	81	1/3 OCC. (MIN. 10)	27.0	-
3	BOILING CRAB - OLD	18902 E. GALE AVE.	RESTAURANT	6,108	199	1/3 OCC. (MIN. 10)	66.33	-
4	M&T SEAFOOD VILLAGE	18904 E. GALE AVE.	RESTAURANT	4,800	189	1/3 OCC. (MIN. 10)	63.0	-
5	FIRST BANK	18906 E. GALE AVE.	BANK	2,456	-	1/400 SF	6.65	-
6	DENTIST	18906A E. GALE AVE.	OFFICE	1,242	-	1/400 SF	3.11	-
7	DIAMOND TRAVEL	18906B E. GALE AVE.	OFFICE	300	-	1/400 SF.	0.75	-
8	SAM WOO	18908 E. GALE AVE.	RESTAURANT	4,000	110	1/3 OCC. (MIN. 10)	36.67	-
9	PHO ROWLAND	18910A E. GALE AVE.	RESTAURANT	1,290	43	1/3 OCC. (MIN. 10)	14.33	-
10	AFTERS ICE CREAM	18910B E. GALE AVE.	RETAIL	1,310	-	1/400 SF	3.28	-
11	TEN REN TEA TIME	18912A E. GALE AVE.	RESTAURANT	1,300	30	1/3 OCC. (MIN. 10)	10.0	-
12	KEE WAH BAKERY	18912B E. GALE AVE.	RETAIL	1,300	-	1/400 SF	3.25	-
13	BEAUTY COUTURE	18916 E. GALE AVE	RETAIL	1,300	-	1/400 SF	3.25	-
14	WG FINANCIAL	18918 E. GALE AVE	OFFICE	1,300	-	1/400 SF	3.25	-
15	SILK ROAD GARDENS	18920 E. GALE AVE.	RESTAURANT	1,300	35	1/3 OCC. (MIN. 10)	11.67	-
16	DING'S GARDEN	18922A E. GALE AVE.	RESTAURANT	1,095	30	1/3 OCC. (MIN. 10)	10.0	-
17	BERRI YOGURT	18922B E. GALE AVE.	RESTAURANT	825	33	1/3 OCC. (MIN. 10)	11.0	-
18	SHISEIDO COSMETICS	18922C E. GALE AVE.	RETAIL	825	-	1/400 SF	2.06	-
19	YU'S RESOURCES	18922D E. GALE AVE.	RETAIL	825	-	1/400 SF.	2.06	-
20	BOILING CRAB - NEW	18922 E. GALE AVE.	RESTAURANT	11,430	330	1/3 OCC. (MIN. 10)	110.00	-
21	CHANG LONG GINSENG	18924 E. GALE AVE.	RETAIL	1,000	-	1/400 SF	2.5	-
22	FOUNTAIN OF HEALTH	18926 E. GALE AVE.	SERVICES	1,000	-	1/400 SF	2.5	-
23	FOUNTAIN OF HEALTH	18926 E. GALE AVE.	SERVICES	1,000	-	1/400 SF.	2.5	-
24	Q NOODLE HOUSE	18930 E. GALE AVE.	RESTAURANT	1,000	30	1/3 OCC. (MIN. 10)	10.0	-
25	SHANCHENG LAMEIZI HOTPOT	18932 E. GALE AVE.	RESTAURANT	3,523	79	1/3 OCC. (MIN. 10)	26.33	
	TOTAL			58,546		--	482.49	-

Parking Summary — UPDATED 08-12-2015

TOTAL NUMBER OF SPACES REQUIRED:	482.49	SPACES
VAN ACCESSIBLE REQUIRED:	2	SPACES
ACCESSIBLE SPACES REQUIRED:	14	SPACES (INCLUDING VAN ACCESSIBLE)
		PERCENTAGE
TOTAL NUMBER OF SPACES PROVIDED:	493	SPACES
REGULAR PARKING SPACES PROVIDED	290	SPACES 59.0%
COMPACT PARKING SPACES PROVIDED	189	SPACES 38.2%
VAN ACCESSIBLE SPACES.	5	SPACES 1.0%
REGULAR ACCESSIBLE SPACES	9	SPACES 1.8%

jwl
JWL ASSOCIATES INC
ARCHITECTURAL & ENGINEERING
1221 S. HACIENDA BLVD.
HACIENDA HEIGHTS, CA 91745
TEL: (626) 806-0159
FAX: (626) 369-8978

ALL DRAWINGS AND WRITTEN MATERIAL APPEARING HEREIN CONSTITUTE THE ORIGINAL AND UNPUBLISHED WORK OF THE DESIGNER AND THE SAME MAY NOT BE DUPLICATED, USED OR DISCLOSED WITHOUT THE WRITTEN CONSENT OF THE DESIGNER.

ALL DIMENSIONS AND EXISTING CONDITIONS SHALL BE VERIFIED BY THE CONTRACTOR AND NOTIFY THE DESIGNER OF ANY DISCREPANCIES BEFORE PROCEEDING WITH WORK BEGINNING ANY WORK.

THE CONTRACTOR SHALL COORDINATE ALL ELECTRICAL WORK WITH THE ARCHITECTURAL, MECHANICAL AND ANY OTHER RELATED WORK. AND NOTIFY THE DESIGNER OF ANY DISCREPANCIES BEFORE PROCEEDING AND/OR BEGINNING ANY WORK.

PROPOSED FOR:
SHANCHENG LAMEIZI HOT POT
18932 E. GALE AVE.
ROWLAND HEIGHTS, CA 91745

REGISTERED PROFESSIONAL ENGINEER
#3144
Exp. 03-31-16
CIVIL
STATE OF CALIFORNIA

SHEET TITLE: MANDARIN PLAZA SITE PLAN

Issue Date: 08-03-15	
Revisions	
No.	Date	Description
1		
2		
3		
Project No: 2015.0036	Drawn By: J.S.
Designer: J.S.	Checked By:

Sheet Number:
A-1.1

PERMIT SET, NOT FOR CONSTRUCTION BID

LEGEND

- EXISTING WALL
- EXISTING FIXED GLASS WINDOW
- EXISTING WALL TO BE REMOVED
- EXIT — * ILLUMINATED EXIT SIGNS TO BE MOUNTED OR SUSPENDED AT DOOR HEIGHT WITH BACK UP BATTERY NOT LESS THAN 90 MINS, HAVE INTENSITY OF NOT LESS THAN 5 FOOT-CANDLES (54 LUX)

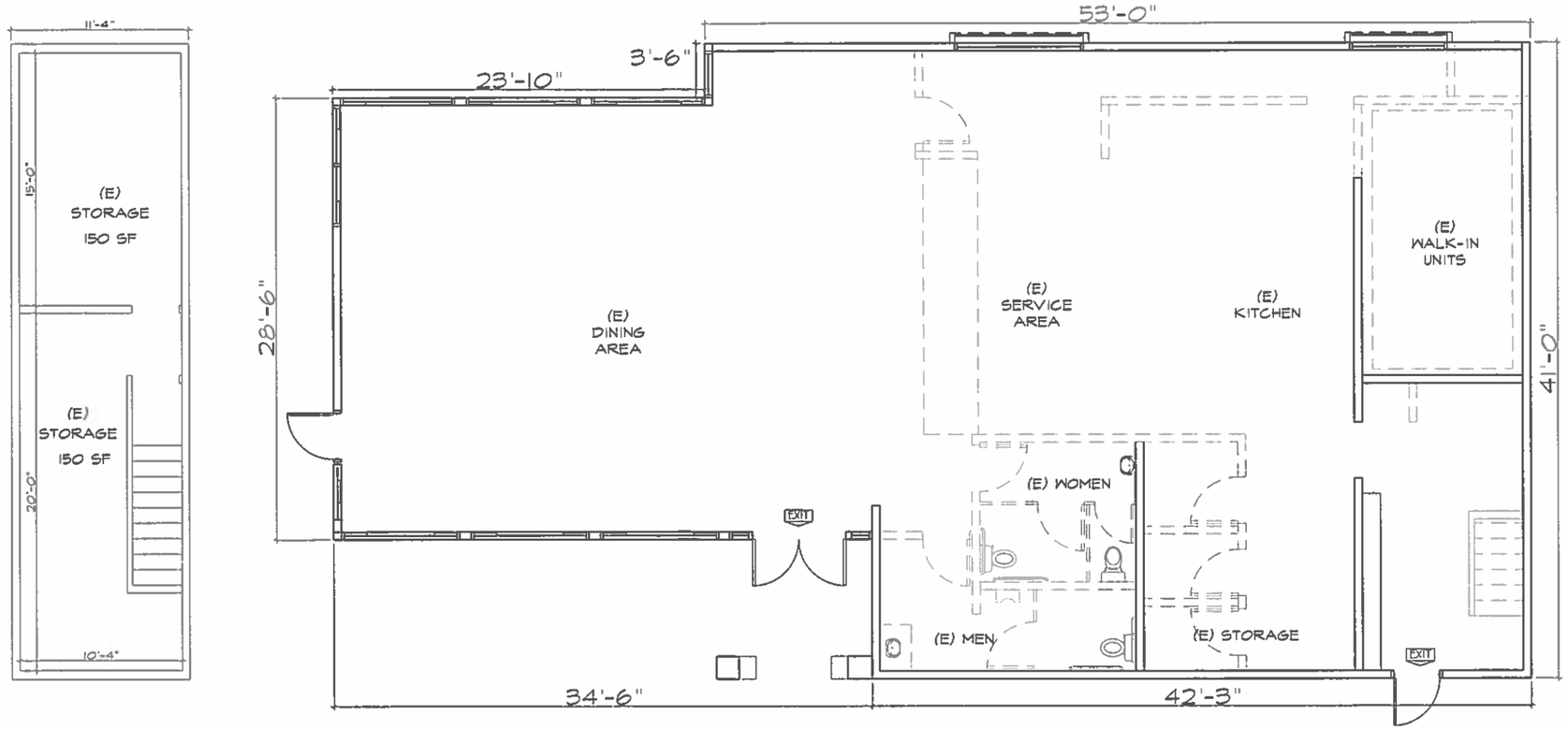

EXISTING 2ND FLOOR (NO CHANGE)
SCALE 1/4" = 1'-0"
N

EXISTING AND DEMOLITION PLAN
SCALE 1/4" = 1'-0"
N

jwl
JWL ASSOCIATES INC
ARCHITECTURAL & ENGINEERING
1221 S. HACIENDA BLVD.
HACIENDA HEIGHTS, CA 91745
TEL: (626) 956-0158
FAX: (626) 369-8978

ALL DRAWINGS AND WRITTEN MATERIAL APPEARING HEREIN CONSTITUTE THE ORIGINAL AND UNPUBLISHED WORK OF THE DESIGNER AND THE SAME MAY NOT BE DUPLICATED, USED OR DISCLOSED WITHOUT THE WRITTEN CONSENT OF THE DESIGNER.

ALL DIMENSIONS AND FIELDING CONDITIONS SHALL BE VERIFIED BY THE CONTRACTOR AND WRITTEN THE DESIGNER OF ANY DISCREPANCIES BEFORE PROCEEDING WITH AND/OR BEGINNING ANY WORK.

THE CONTRACTOR SHALL COORDINATE ALL STRUCTURAL WORK WITH THE ARCHITECTURAL, MECHANICAL AND ANY OTHER RELATED DRAWINGS, AND NOTIFY THE DESIGNER OF ANY DISCREPANCIES BEFORE PROCEEDING AND/OR BEGINNING ANY WORK.

PROPOSED FOR:
SHANCHENG LANEZI HOT POT
1813 E. GALE AVE.
ROWLAND HEIGHTS, CA 91745

REGISTERED PROFESSIONAL ENGINEER
63144
Exp 03-31-16
CIVIL
STATE OF CALIFORNIA

SHEET TITLE:
EXISTING AND DEMOLITION PLAN

Issue Date: 08-03-15		
Revisions:		
No.	Date	Description
1		
2		
3		
Project No: 2015_0036		Drawn By: J.S.
Designer: J.S.		Checked By:

Sheet Number:
A-2.1

PERMIT SET, NOT FOR CONSTRUCTION

OCCUPANCY LOAD
18932 E. GALE AVE. ROWLAND HETIGHTS
SHANCHENG LAMEIZI HOT POT

#	AREA	SQ FT	RATIO	O.C. PER AREA
1.	DINING AREA	1250	FIXED SEAT	74
2.	SERVICE	100	/100	1
3.	KITCHEN / PREP RM / WASHING AREA	800	/200	4
4.	RESTROOM	280	-	0
5.	HALL WAY	793	-	0
6.	STORAGE / WALK-IN COOLER	300	-	0
	TOTAL:	3523		79

PARKING REQUIRED: 79 / 3 = 26.33

LEGEND

- EXISTING WALL
- EXISTING FIXED GLASS WINDOW
- NEW INTERIOR PARTITION WALL
- EXIT — ILLUMINATED EXIT SIGNS TO BE MOUNTED OR SUSPENDED AT DOOR HEIGHT WITH BACK UP BATTERY NOT LESS THAN 90 MINS, HAVE INTENSITY OF NOT LESS THAN 5 FOOT-CANDLES (54 LUX)
- DOWN-DRAFT HOT POT TABLE FIXED TO GROUND

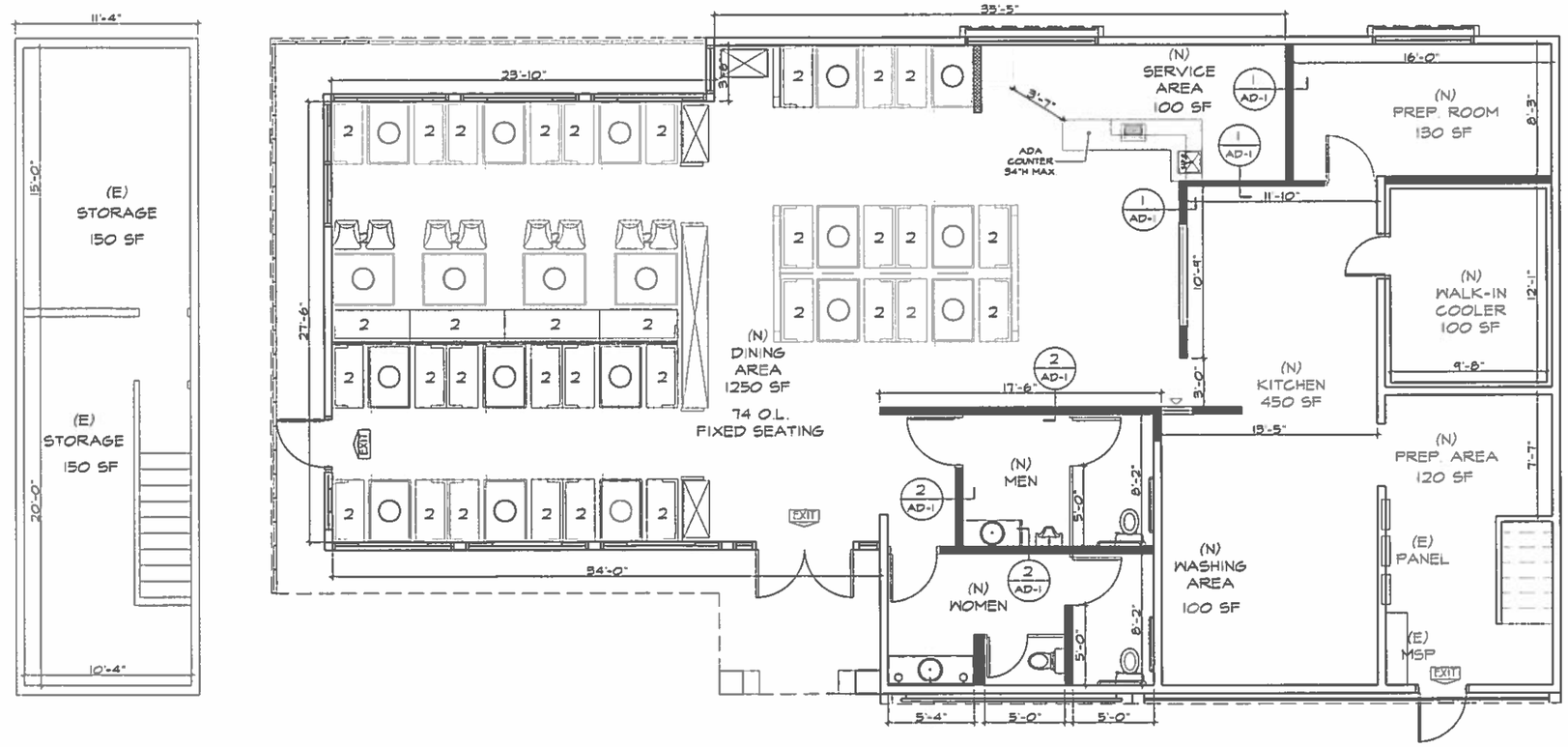

EXISITNG 2ND FLOOR (NO CHANGE)
SCALE 1/4" = 1'-0"

N

PROPOSED FLOOR PLAN
SCALE 1/4" = 1'-0"

N

JWL ASSOCIATES INC
ARCHITECTURAL & ENGINEERING
1221 S. HACIENDA BLVD.
HACIENDA HEIGHTS, CA 91745
TEL: (626) 966-0168
FAX: (626) 369-8978

ALL DRAWINGS AND WRITTEN MATERIAL APPEARING HEREIN CONSTITUTE THE ORIGINAL AND UNPUBLISHED WORK OF JWL ASSOCIATES AND THE SAME MAY NOT BE DUPLICATED, USED OR DISCLOSED WITHOUT THE WRITTEN CONSENT OF THE DESIGNER.

ALL DIMENSIONS AND EXISTING CONDITIONS SHALL BE VERIFIED BY THE CONTRACTOR AND NOTIFY THE DESIGNER OF ANY DISCREPANCIES BEFORE PROCEEDING WITH AND/OR BEGINNING ANY WORK.

THE CONTRACTOR SHALL COORDINATE ALL STRUCTURAL WORK WITH THE ARCHITECTURAL, MECHANICAL AND ELECTRICAL PLUMBING DRAWINGS. AND NOTIFY THE DESIGNER OF ANY DISCREPANCIES BEFORE PROCEEDING AND/OR BEGINNING ANY WORK.

PROPOSED FOR:
SHANCHENG LAMEIZI HOT POT
18932 E. GALE AVE.
ROWLAND HEIGHTS, CA 91745

REGISTERED PROFESSIONAL ENGINEER
43146
Exp 03-31-16
CIVIL
STATE OF CALIFORNIA

SHEET TITLE:
PROPOSED FLOOR PLAN

Issue Date: 06-03-15	
Revisions	
No.	Date	Description
1		
2		
3		
Project No: 2015_0038	Drawn By: J.S.
Designer: J.S.	Checked By:

Sheet Number:
A-2.2

PERMIT SET, NOT FOR CONSTRUCTION BID

MATERIALS LEGEND

1. EXISTING STUCCO WITH COLOR WHITE
2. EXISTING STUCCO WITH COLOR PALE PEACH
3. EXISTING STUCCO WITH COLOR PALE OLD IVORY
4. EXISTING FIXED GLASS WINDOW
5. EXISTING SIGN

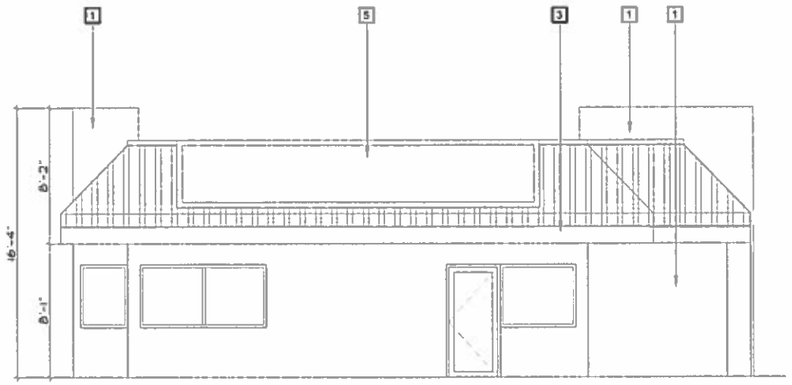

NORTH ELEVATION

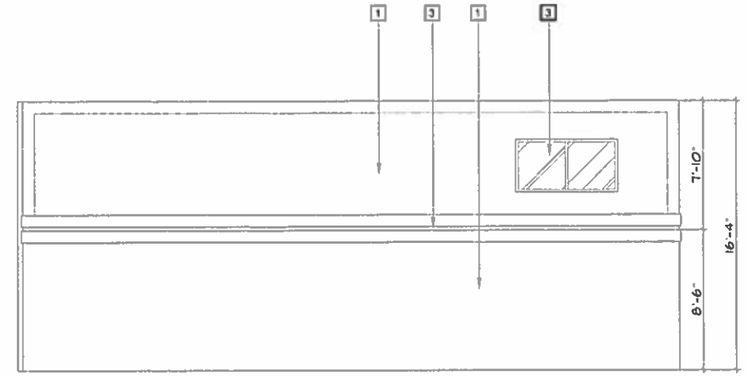

SOUTH ELEVATION

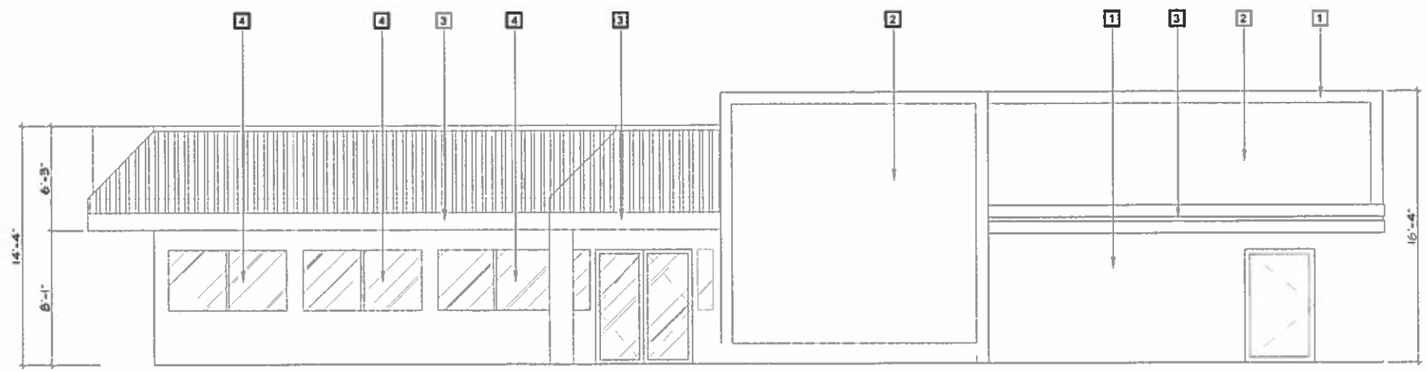

WEST ELEVATION

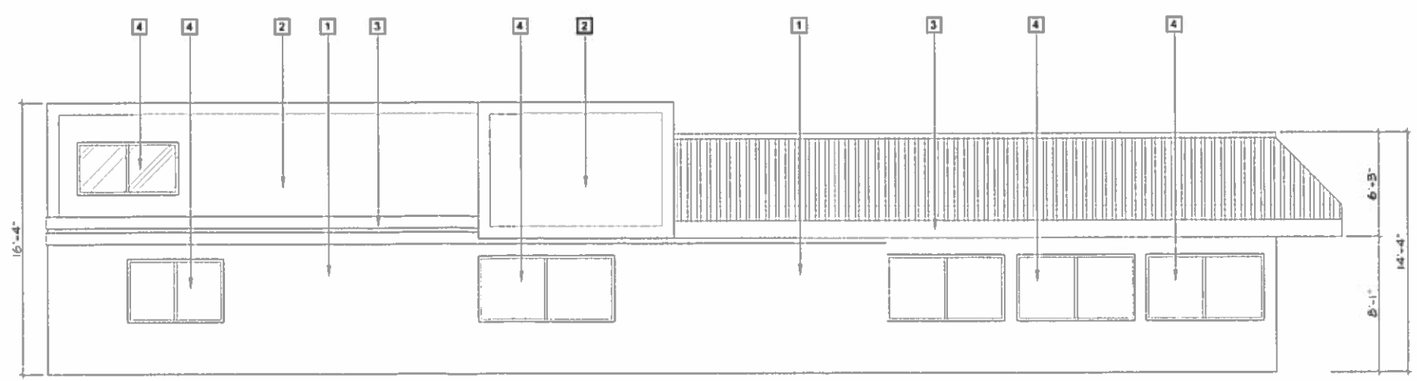

EAST ELEVATION

EXISITNG ELEVATIONS

SCALE 1/4" = 1'-0"

JWL ASSOCIATES INC

ARCHITECTURAL & ENGINEERING

1221 S. HACIENDA BLVD.
HACIENDA HEIGHTS, CA 91745

TEL: (626) 966-0168
FAX: (626) 369-8978

ALL DRAWINGS AND WRITTEN MATERIAL APPEARING HEREIN CONSTITUTE THE ORIGINAL AND UNPUBLISHED WORK OF THE DESIGNER AND THE SAME MAY NOT BE DUPLICATED USED OR DISCLOSED WITHOUT THE WRITTEN CONSENT OF THE DESIGNER

ALL DIMENSIONS AND EXISTING CONDITIONS SHALL BE VERIFIED BY THE CONTRACTOR AND NOTIFY THE DESIGNER OF ANY DISCREPANCIES BEFORE PROCEEDING WITH WORK BEGINNING ANY WORK

THE CONTRACTOR SHALL COORDINATE ALL STRUCTURAL WORK WITH THE ARCHITECTURAL, MECHANICAL AND ANY OTHER RELATED DRAWINGS AND NOTIFY THE DESIGNER OF ANY DISCREPANCIES BEFORE PROCEEDING WITH WORK BEGINNING ANY WORK.

PROPOSED FOR:

SHANCHENG LAMEIZI HOT POT

16932 E. GALE AVE.
ROWLAND HEIGHTS, CA 91745

REGISTERED PROFESSIONAL ENGINEER
KUOHPING WANG
43144
Exp. 03-31-18
CIVIL
STATE OF CALIFORNIA

SHEET TITLE:

EXISTING ELEVATIONS

Issue Date: 08-03-15

Revisions

No.	Date	Description
1		
2		
3		

Project No: 2015_0036	Drawn By: J.S.
Designer: J.S.	Checked By:

Sheet Number:

A-3.1

PERMIT SET, NOT FOR CONSTRUCTION BID

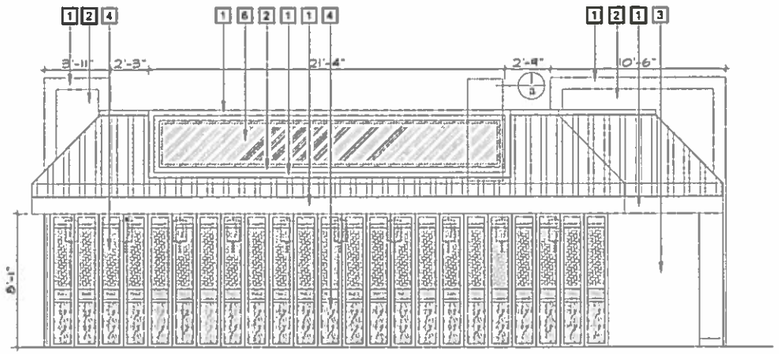

NORTH ELEVATION

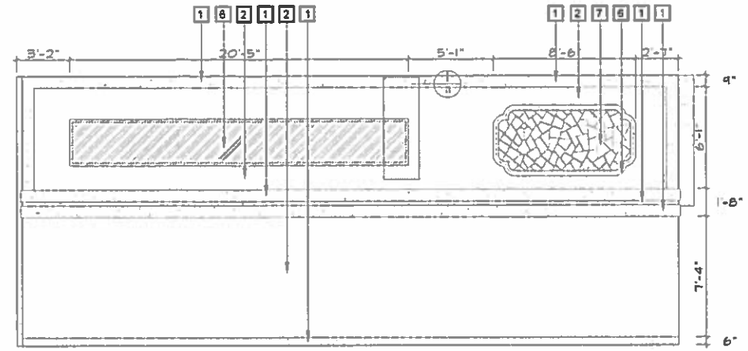

SOUTH ELEVATION

MATERIALS LEGEND

1. STUCCO WITH PAINT COLOR DARK GRAY
2. STUCCO WITH PAINT COLOR WHITE
3. STUCCO WITH PAINT COLOR BRICK RED
4. DECORATIVE PANEL CUSTOM OLD DOOR STYLE
5. WINDOW FRAME, STUCCO WITH PAINT COLORDARK GRAY
6. STEEL PLATE SIGN BOARD, BUILT-IN LIGHT WITH PRIMER METAL PAINT
7. LIGHT STEEL DECORATIVE WINDOW, WITH PRIMER METAL PAINT, BUILT-IN LIGHT
8. CUSTOM METAL MESH, WITH PAINT
9. ENTRANCE OPENING TRIM WITH PAINT COLOR DARK GRAY
10. EXISTING GLASS WINDOW

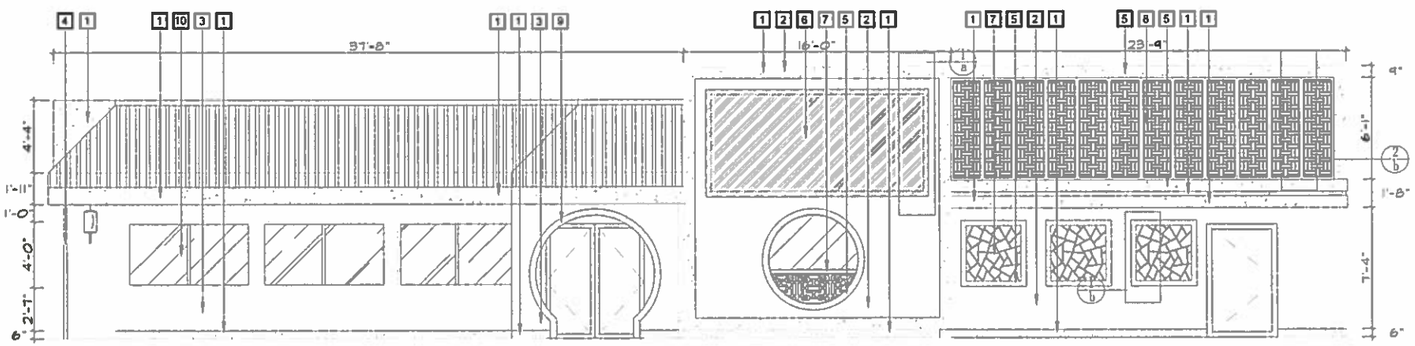

WEST ELEVATION

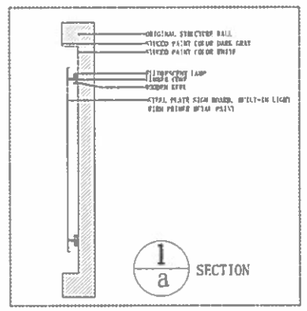

1/a SECTION

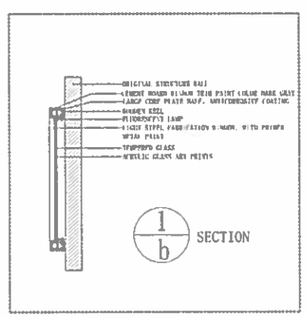

1/b SECTION

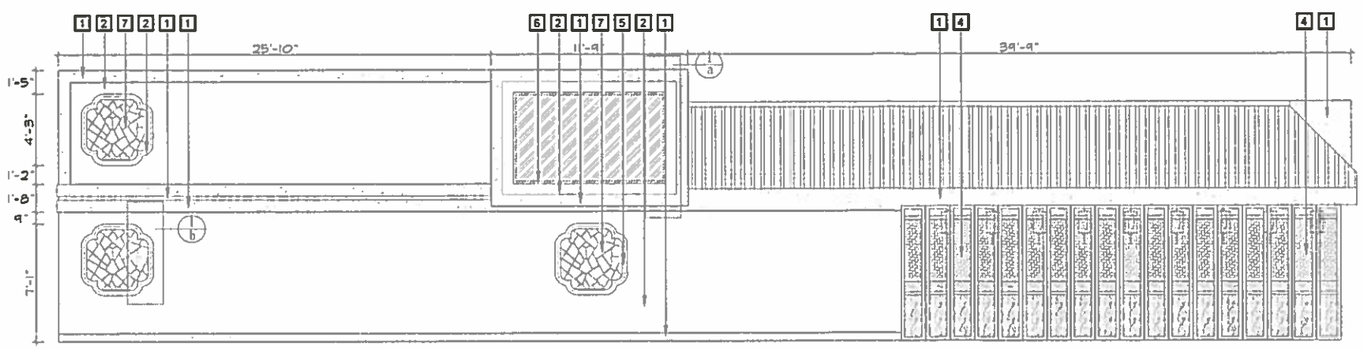

EAST ELEVATION

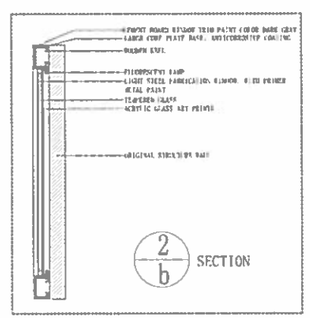

2/b SECTION

PROPOSE ELEVATIONS

SCALE 1/4" = 1'

PERMIT SET, NOT FOR CONSTRUCTION USE

jwl
JWL ASSOCIATES INC
ARCHITECTURAL & ENGINEERING
1221 S. HACIENDA BLVD.
HACIENDA HEIGHTS, CA 91745
TEL: (626) 905-0169
FAX: (626) 369-8978

ALL DRAWINGS AND WRITTEN MATERIAL APPEARING HEREIN CONSTITUTE THE ORIGINAL AND UNPUBLISHED WORK OF THE DESIGNER AND THE SAME MAY NOT BE USED, COPIED OR DISCLOSED WITHOUT THE WRITTEN CONSENT OF THE DESIGNER.

ALL DIMENSIONS AND EXISTING CONDITIONS SHALL BE VERIFIED BY THE CONTRACTOR AND NOTIFY THE DESIGNER OF ANY DISCREPANCIES BEFORE PROCEEDING WITH ANY WORK BEGINNING ANY WORK.

THE CONTRACTOR SHALL COORDINATE ALL STRUCTURAL WORK WITH THE ARCHITECTURAL, MECHANICAL AND ELECTRICAL BUILDING DRAWINGS AND NOTIFY THE DESIGNER OF ANY DISCREPANCIES BEFORE PROCEEDING AND/OR BEGINNING ANY WORK.

PROPOSED FOR:
SHANCHENG LAMEZI HOT POT
18232 E. GALE AVE.
ROWLAND HEIGHTS, CA 91745

REGISTERED PROFESSIONAL ENGINEER
43144
Exp 03-31-16
CIVIL
STATE OF CALIFORNIA

SHEET TITLE: PROPOSE ELEVATIONS

Issue Date: 08-03-15		
Revisions:		
No.	Date	Description
1		
2		
3		
Project No: 2015_0036		Drawn By: J.S.
Designer: J.S.		Checked By:

Sheet Number:

A-3.1