T · ·Mobile·®

SITE NUMBER:	**SV00586E**	**CITY:**	**MALIBU**
SITE NAME:	**TM001 PEPPERDINE KECK BUILDING**	**COUNTY:**	**LOS ANGELES**
SITE TYPE:	**ROOF TOP**	**JURISDICTION:**	**CITY OF MALIBU**

PROJECT SUMMARY

SITE ADDRESS:
24255 PACIFIC COAST HWY.
MALIBU, CA 90263
COUNTY OF LOS ANGELES

PROPERTY OWNER CONTACT:
24255 PACIFIC COAST HWY.
MALIBU, CA 90263
COUNTY OF LOS ANGELES
CONTACT: KIM CAREY
310-506-6655

APPLICANT:
T-MOBILE WEST LLC
4100 GUARDIAN ST., SUITE 101
SIMI VALLEY CA 93063
REPRESENTATIVE: JESSE GILHOLM
REAL ESTATE MANAGER: CHARLIE PRICE
CONSTRUCTION MANAGER: KENNY TOWNSEND
CONSTRUCTION COORDINATOR: RICHARD RAMELOW

BUILDING SUMMARY:
OCCUPANCY CLASSIFICATION: A-3
TYPE OF CONSTRUCTION: 2
AREA OF CONSTRUCTION: 225 SF
ASSESSORS PARCEL NUMBER: 4458-038-010

PROJECT DESCRIPTION:
THE PROJECT ENTAILS:
T-MOBILE PROPOSED TO INSTALL (E) WIRELESS TELECOMMUNICATIONS SITE BY:
1. INSTALLATION OF FOUR (4) EQUIPMENT CABINETS
2. INSTALLATION OF THREE (3) ANTENNA PER SECTOR, (TOTAL OF 9)
3. INSTALLATION OF THREE (3) RRU'S PER SECTOR, (TOTAL OF 9)
4. INSTALLATION OF POWER AND TELCO RACK NEAR EQUIPMENT AREA
5. INSTALLATION OF (1) 15.3" DIA. MICROWAVE DISH: COMMSCOPE VHLP1-23 ANTENNA

CONSULTING TEAM

SAC/ZONING/PERMITTING:
SYNERGY DEVELOPMENT SERVICES, INC.
7543 WOODLEY AVENUE, SUITE 201
VAN NUYS, CA 91406
CONTACT: WALTER J. GAWORECKI III
PHONE: (818) 840-0808
FAX: (818) 688-8066

ARCHITECTURAL/ENGINEERING:
SYNERGY DEVELOPMENT SERVICES, INC.
7543 WOODLEY AVENUE, SUITE 201
VAN NUYS, CA 91406
CONTACT: ADAM BRONNENKANT, P.E.
PHONE: (818) 840-0808
FAX: (818) 688-8066

STRUCTURAL ENGINEERING:
SYNERGY DEVELOPMENT SERVICES, INC.
7543 WOODLEY AVENUE, SUITE 201
VAN NUYS, CA 91406
CONTACT: ADAM BRONNENKANT, P.E.
PHONE: (818) 840-0808
FAX: (818) 688-8066

SHEET INDEX

SHEET	DESCRIPTION
T-1	TITLE SHEET
T-2	GENERAL NOTES
T-3	ABBREVIATIONS, GENERAL NOTES AND SYMBOLS
T-4	GENERAL STRUCTURAL NOTES
A-1	OVERALL SITE PLAN
A-2	ENLARGED SITE PLAN
A-3	EQUIPMENT / ANTENNA LAYOUT PLANS
A-4	ELEVATIONS
A-5	ELEVATIONS
D-1	DETAILS
S-1	DETAILS
S-2	DETAILS
E-1	GENERAL NOTES, PANEL, SCHEDULE AND SINGLE LINE DIAGRAM
E-2	COAX CABLE GROUNDING SCHEMATIC DIAGRAM
E-3	DETAILS
E-4	DETAILS
RF-1	SPECIFICATIONS
RF-2	SPECIFICATIONS

APPROVALS:

THE FOLLOWING PARTIES HEREBY APPROVE AND ACCEPT THESE DOCUMENTS AND AUTHORIZE THE CONTRACTOR TO PROCEED WITH THE CONSTRUCTION DESCRIBED HEREIN. ALL CONSTRUCTION DOCUMENTS ARE SUBJECT TO REVIEW BY THE LOCAL BUILDING DEPARTMENT AND ANY CHANGES AND MODIFICATIONS THEY MAY IMPOSE.

	PRINT NAME	SIGNATURE	DATE
LANDLORD:			
ZONING MGR:			
DEVELOP. MGR:			
CONST. MGR:			
PROJECT MGR:			
SR. RF ENGINEER:			
RF ENGINEER:			
OPERATIONS:			
SAC REP.:			
UTILITIES:			
REAL ESTATE MGR:			

VICINITY MAP:

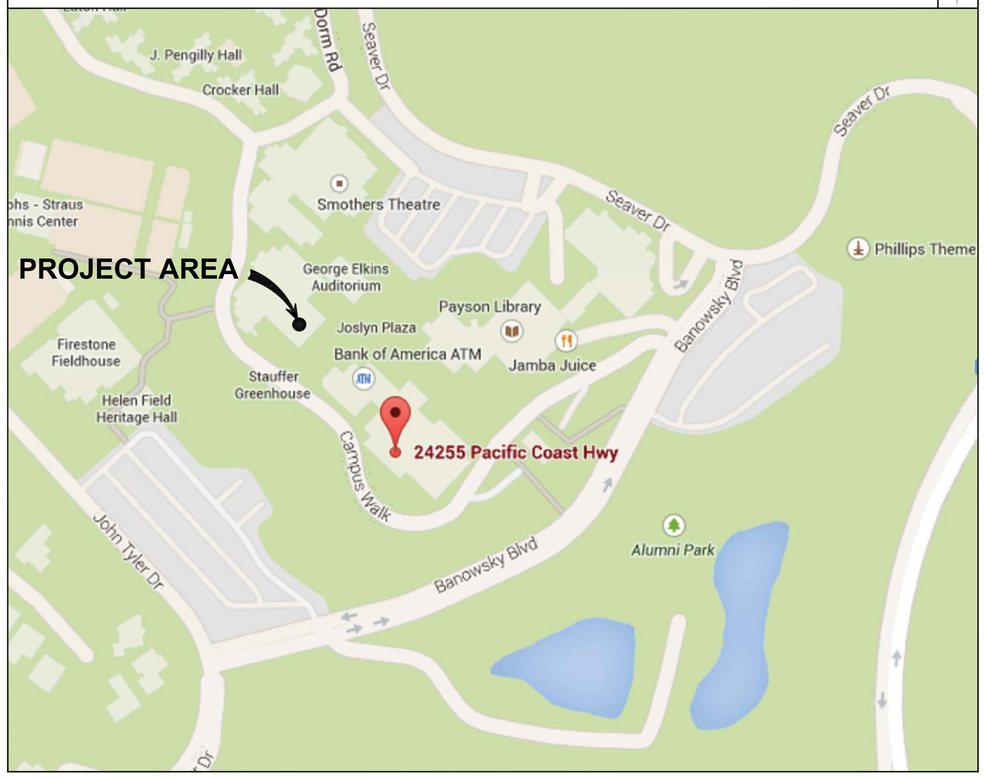

DIRECTIONS FROM T-MOBILE OFFICE:
HEAD SOUTHWEST ON GUARDIAN ST TOWARD TAPO CANYON RD, TURN RIGHT ONTO TAPO CANYON RD, TURN LEFT ONTO ROYAL AVE., TURN LEFT ONTO MADERA RD. CONTINUE ONTO E. OLSEN RD., TAKE THE RAMP ONTO CA-23 S, TAKE THE EXIT ON THE LEFT ONTO US-101 S TOWARD LOS ANGELES. TAKE THE LOST HILLS RD EXIT, TURN RIGHT ONTO LOST HILLS RD, TURN RIGHT ONTO LAS VIRGENES RD, CONTINUE ONTO BACKBONE TRAIL/MALIBU CANYON ROAD. TURN RIGHT ONTO SEAVER DRIVE

THOMAS GUIDE
REGION: LOS ANGELES
PAGE 456
GRID #: H-5

APPLICABLE CODES:

1. CALIFORNIA ADMINISTRATIVE CODE (INCL. TITLES 24 & 25) 2013
2. CALIFORNIA BUILDING CODES 2013
3. CALIFORNIA ELECTRICAL CODES 2013
4. CALIFORNIA MECHANICAL CODES 2013
5. CALIFORNIA PLUMBING CODES 2013
6. ANSI / EIA-222 E&F
7. LOCAL BUILDING CODES
8. CITY / COUNTY ORDINANCES
9. CALIFORNIA FIRE CODE 2013 EDITION
10. ASCE 7-10
11. ACI 318-11

POWER AND TELCO UTILITY CONTACTS:

POWER:
COMPANY: –

TELCO:
COMPANY: –

Nov 05, 2015 – 3:19pm

T · ·Mobile·
Stick Together®
4100 GUARDIAN ST., SUITE 101
SIMI VALLEY, CA 93063

PROJECT INFORMATION:
TM001 PEPPERDINE KECK BUILDING
SV00586E
24255 PACIFIC COAST HWY.
MALIBU, CA 90263
COUNTY OF LOS ANGELES

CURRENT ISSUE DATE:
11/05/15

ISSUED FOR:
CONSTRUCTION

REV.:	DATE:	DESCRIPTION:	BY:
A	9/17/15	90% CD ISSUED FOR REVIEW	PAD
B	11/05/15	90% CD REVISED PER CHANGE IN S.O.W.	RAS

PLANS PREPARED BY:
Synergy Development Services, INC.
7543 Woodley Ave #201 Van Nuys, CA 91406
Office: (818) 840-0808 Fax: (818) 688-8066

CONSULTANT:
Synergy Development Services, INC.
7543 Woodley Ave #201 Van Nuys, CA 91406
Office: (818) 840-0808 Fax: (818) 688-8066

DRAWN BY:	CHK.:	APV.:
PAD	SYNERGY	AB

LICENSURE:
REGISTERED PROFESSIONAL ENGINEER ADAM BRONNENKANT C74190 EXP.6/30/17 CIVIL STATE OF CALIFORNIA

SHEET TITLE:
TITLE SHEET

SHEET NUMBER: T-1
REVISION: A
SV00586E

ROOFING & WATERPROOFING NOTES

1. CONTRACTOR SHALL CONTACT THE BUILDING OWNER TO DETERMINE IF ROOF IS UNDER WARRANTY. CONTRACTOR SHALL GUARANTEE THAT ANY AND ALL NEW ROOFING WORK MEETS THE SPECIFICATION OF ANY EXISTING ROOFING WARRANTIES SUCH THAT THE WARRANTY IS NOT MADE INVALID AS A RESULT OF THIS WORK. IF IT IS DETERMINED THAT THE ARCHITECT'S DETAILING IS INADEQUATE OR IMPROPER OR IF ANY OTHER DISCREPANCY IS FOUND, THE CONTRACTOR SHALL IMMEDIATELY NOTIFY THE ARCHITECT AND THE CLIENT PROJECT MANAGER IN WRITING. ULTIMATELY, THE CONTRACTOR SHALL BE RESPONSIBLE FOR COMPLYING WITH THE ORIGINAL ROOF MANUFACTURER'S SPECIFICATIONS.

2. CONTRACTOR SHALL USE METHODS AND MATERIALS SIMILAR AND COMPATIBLE WITH EXISTING MATERIALS & CONDITIONS FOR ROOF PATCHING, NEW PENETRATIONS, ETC.

3. THE CONTRACTOR SHALL PROPERLY SEAL ALL NEW ROOF & BUILDING ENVELOPE PENETRATIONS SUCH THAT THE INTEGRITY OF THE ORIGINAL BUILDING ASSEMBLY AND ALL APPLICABLE WARRANTIES ARE MAINTAINED.

4. IF IT DEEMED NECESSARY TO REMOVE EXISTING FINISHED AND/OR MATERIALS, THE CONTRACTOR SHALL BE RESPONSIBLE FOR RECONSTRUCTING FINISHES AND MATERIALS TO LINE-NEW CONDITIONS. CONTRACTOR SHALL MAINTAIN THE ORIGINAL COLORS, TEXTURES & FINISHES UNLESS SPECIFICALLY NOTED TO THE CONTRARY OR APPROVED 'T-MOBILE CONSTRUCTION MANAGER IN ADVANCE.

5. AT THE CLIENT CONSTRUCTION MANAGER'S DISCRETION, THE CONTRACTOR SHALL PROVIDE ROOFTOP WALKPADS TO ALL NEW EQUIPMENT INCLUDING ANTENNAS AND BTS UNITS AND ALONG COAX CABLE ROUTING. ON CONVENTIONAL ROOFING, THE WALK PADS SHALL BE "DUCK BOARDS" AS MANUFACTURED BY APC OR EQUAL. ON SPECIAL ROOFING SYSTEMS SUCH AS SINGLE MEMBRANE ROOFS WILL REQUIRE A SPECIFIC PRODUCT AS NOTED ON PLANS OR AS REQUIRED BY NOTES 1 & 2 ABOVE.

PENETRATION AT FIRE RATED ASSEMBLIES NOTES

1. AT THE CLIENT PROJECT MANAGER'S DIRECTION, THE CONTRACTOR SHALL PROVIDE "HILTI" HIGH PERFORMANCE FIRESTOP SYSTEM #FS601 AT ALL FIRE RATED PENETRATIONS INSTALLED PER MANUFACTURER'S LATEST INSTALLATION SPECIFICATIONS.

2. ALL PENETRATIONS THROUGH FIRE RATED ASSEMBLIES SHALL BE CONSTRUCTED SO AS TO MAINTAIN AN EQUAL OR GREATER FIRE RATING.

GENERAL NOTES

1. THE LATEST EDITION OF THE AMERICAN INSTITUTE OF ARCHITECTS DOCUMENT A201 "GENERAL CONDITIONS OF THE CONTRACT FOR CONSTRUCTION" ARE INCLUDED IN THESE SPECIFICATIONS AS IF COMPLETELY REPRODUCED HEREIN.

2. THESE NOTES SHALL BE CONSIDERED A PART OF THE WRITTEN SPECIFICATION.

3. THIS FACILITY IS AN UNOCCUPIED T-MOBILE TELECOMMUNICATIONS SITE AND IS EXEMPT FROM DISABLED ACCESS REQUIREMENTS.

4. PRIOR TO THE SUBMISSION OF BIDS, THE CONTRACTOS PARTICIPATING SHALL VISIT THE JOB SITE AND FAMILIARIZE THEMSELVES WITH ALL FIELD CONDITIONS AFFECTING THE PROPOSED PROJECT INCLUDING DEMOLITION, ELECTRICAL, MECHANICAL AND STRUCTURAL INSTALLATIONS, AS WELL AS WITH THE CONSTRUCTION AND CONTRACT DOCUMENTS AND SHALL CONFIRM THAT THE PROJECT CAN BE ACCOMPLISHED AS SHOWN PRIOR TO PROCEEDING WITH THE CONSTRUCTION. SHOULD ANY ERRORS, OMISSION, OR DISCREPANCIES BE FOUND, THE GENERAL CONTRACTOR SHALL IMMEDIATELY NOTIFY SYNERGY AND THE PROJECT ARCHITECT / ENGINEER IN WRITING. IN THE EVENT OF DISCREPANCIES FOUND, THE GENERAL CONTRACTOR SHALL IMMEDIATELY NOTIFY SYNERGY AND THE PROJECT ARCHITECT / ENGINEER IN WRITING. IN THE EVENT OF DISCREPANCIES THE CONTRACTOR SHALL INCLUDE THE MORE COSTLY OR EXTENSIVE WORK IN THE BID, UNLESS SPECIFICALLY DIRECTED OTHERWISE. THE CONTRACTOR SHALL BE RESPONSIBLE FOR CORRECTING ANY ERROR, OMISSION, OR INCONSISTENCY AFTER THE START OF THE CONSTRUCTION WHICH HAS NOT BEEN BROUGHT TO THE ATTENTION OF THE PROJECT ARCHITECT / ENGINEER AND SHALL INCUR ANY EXPENSES TO RECTIFY THE SITUATION. THE MEANS OF CORRECTING ANY ERROR SHALL FIRST BE APPROVED BY THE PROJECT ARCHITECT / ENGINEER.

5. THE CONTRACTOR SHALL INCLUDE IN HIS OR HER BID ALL MATERIALS, EQUIPMENT, APPURTENANCES AND LABOR NECESSARY TO COMPLETE THE WORK AS INDICATED OR IMPLIED BY THESE DRAWINGS.

6. THE CONTRACTOR SHALL PROVIDE CONTINUOUS SUPERVISION WHILE ANY SUBCONTRACTORS OR WORKMEN ARE IN THE SITE AND SHALL SUPERVISE AND DIRECT ALL WORK, USING HIS BEST SKILL AND ATTENTION. HE SHALL BE SOLELY RESPONSIBLE FOR ALL CONSTRUCTION MEANS, METHODS, TECHNIQUES, PROCEDURES AND SEQUENCES AND FOR COORDINATING ALL PORTIONS OF THE WORK UNDER THE CONTRACT.

7. WORKMANSHIP THROUGHOUT SHALL BE OF THE BEST QUALITY OF THE TRADE INVOLVED, AND SHALL MEET OR EXCEED THE FOLLOWING MINIMUM REFERENCE STANDARDS FOR QUALITY AND PROFESSIONAL CONSTRUCTION PRACTICE:

   NCRA NATIONAL ROOFING CONTRACTORS ASSOCIATION
   O' HARE INTERNATIONAL CENTER
   10255 W. HIGGENS ROAD, SUITE 600
   ROSEMONT, IL 60018

   SMACNA SHEET METAL AND AIR CONDITIONING CONTRACTORS
   NATIONAL ASSOCIATION
   4201 LAFAYETTE CENTER DRIVE
   CHATILLY, VA 22021-1209

   ITLP INTERNATIONAL INSTITUTE FOR LATH AND PLASTER
   820 TRANSFER ROAD
   ST. PAUL, MN 55114-1406

8. INSTALL ALL EQUIPMENT AND MATERIALS PER THE LATEST EDITION OF THE MANUFACTURER'S INSTALLATION SPECIFICATIONS UNLESS SPECIFICALLY OTHERWISE INDICATED, OR WHERE LOCAL CODES OR REGULATIONS PRECEDENCE.

9. THE CONTRACTOR AND ALL SUBCONTRACTORS SHALL GIVE ALL NOTICES AND SHALL COMPLY WITH ALL APPLICABLE LOCAL CODES, REGULATIONS, LAWS AND ORDINANCES AS WELL AS STATE DEPARTMENT OF INDUSTRIAL REGULATIONS AND DIVISION OF INDUSTRIAL SAFETY (OSHA) REQUIREMENTS.

10. THE CONTRACTOR SHALL BE RESPONSIBLE FOR AND SHALL REMEDY ALL FAULTY, INFERIOR, AND/OR IMPROPER MATERIALS, DAMAGED GOODS, AND/OR FAULTY WORKMANSHIP FOR ONE (1) YEAR AFTER THE PROJECT IS COMPLETE AND ACCEPTED UNDER THIS CONTRACT; UNLESS NOTED OTHERWISE IN THE CONTRACT BETWEEN THE OWNER AND CONTRACTOR. (EXCEPTION) THE ROOFING SUBCONTRACTOR SHALL FURNISH A MAINTENANCE AGREEMENT FOR ALL WORK DONE, COSIGNED BY THE GENERAL CONTRACTOR, TO MAINTAIN THE ROOFING IN A WATER TIGHT CONDITION FOR A PERIOD OF TWO (2) YEARS STARTING AFTER THE DATE OF SUBSTANTIAL COMPLETION OF THE PROJECT, UNLESS OTHERWISE WRITTEN IN THE CONTRACT BETWEEN THE OWNER AND THE CONTRACTOR.

GENERAL NOTES (CONTINUATION)

11. THE GENERAL CONTRACTOR MUST PERFORM WORK DURING PROPERTY OWNER'S PREFERRED HOURS TO AVOID DISRUPTION OF NORMAL ACTIVITY.

12. ALL EXPOSED METAL SHEET SHALL BE HOT-DIPPED GALVANIZED.

13. PROVIDE A PORTABLE FIRE EXTINGUISHER WITH A RATING OF NOT LESS THAN 2-A OR 2-A10BC WITHIN 75 FEET TRAVEL DISTANCE TO ALL PORTIONS OF THE PROJECT AREA CONSTRUCTION.

14. THE GOVERNING AGENCIES, CODE AUTHORITIES, AND BUILDING INSPECTORS SHALL PROVIDE THE MINIMUM STANDARDS FOR CONSTRUCTION TECHNIQUES, MATERIALS, AND FINISHES USED THROUGHOUT THE PROJECT TRADE STANDARDS AND/OR PUBLISHED MANUFACTURERS SPECIFICATIONS MEETING OR EXCEEDING DESIGN REQUIREMENTS SHALL BE USED FOR INSTALLATION.

15. PRIOR TO STARTING CONSTRUCTION OF THE CONTRACTOR HAS THE RESPONSIBILITY TO LOCATE ALL EXISTING UTILITIES, AND TO PROTECT THEM FROM DAMAGE. THE CONTRACTOR OR SUBCONTRACTOR SHALL BEAR THE EXPENSE OF REPAIRING OR REPLACING ANY DAMAGE TO THE UTILITIES CAUSED DURING THE EXECUTION OF THE WORK.

16. A COPY OF THE APPROVED PLANS SHALL BE KEPT IN A PLACE SPECIFIED BY THE GOVERNING AGENCY, AND BY LAW SHALL BE AVAILABLE FOR INSPECTION AT ALL TIMES.

17. IT IS THE CONTRACTORS RESPONSIBILITY TO ENSURE ALL CONSTRUCTION SETS REFLECT THE SAME INFORMATION AS THE APPROVED PLANS. THE CONTRACTOR SHALL ALSO MAINTAIN ONE SET OF PLANS AT THE SITE FOR THE PURPOSE OF DOCUMENTING ALL AS-BUILT CHANGES, REVISIONS, ADDENDUM'S, OR CHANGE ORDERS. THE CONTRACTOR SHALL FORWARD THE AS-BUILT DRAWINGS TO THE ARCHITECT/ENGINEER AND THE LANDLORD/LESSOR AT THE CONCLUSION OF THE PROJECT.

18. THE CONTRACTOR SHALL BE RESPONSIBLE FOR THE COMPLETE SECURITY OF THE SITE FROM THE START TO THE COMPLETION OF THE PROJECT. THE CONTRACTOR SHALL MAINTAIN ACCESS TO THE SITE AT ALL TIMES FOR THE LANDLORD/LESSOR PERSONNEL.

19. THE CONTRACTOR IS RESPONSIBLE FOR PROVIDING TEMPORARY POWER, WATER AND TOILET FACILITIES.

20. ALL CONSTRUCTION PHASES OF THE PROJECT SHALL CONFORM TO THE CURRENT CBC, 2012 I.B.C. AND ALL OTHER GOVERNING CODES.

21. THE CONTRACTOR SHALL BE RESPONSIBLE FOR COMPLYING WITH ALL SAFETY PRECAUTIONS AND REGULATIONS DURING THE WORK. THE ENGINEER WILL NOT ADVISE OR PROVIDE DIRECTION AS TO SAFETY PRECAUTIONS AND PROGRAMS.

22. THE CONTRACTOR SHALL SUPERVISE AND COORDINATE ALL WORK, USING HIS PROFESSIONAL KNOWLEDGE AND SKILLS. HE IS SOLELY RESPONSIBLE FOR ALL CONSTRUCTION MEANS, METHODS, TECHNIQUES, PROCEDURES, SEQUENCING AND COORDINATING ALL PORTIONS OF THE WORK.

23. THE CONTRACTOR SHALL BE RESPONSIBLE TO OBTAIN AND PAY FOR ALL PERMITS, LICENSES AND/OR INSPECTIONS TO COMPLETE THE PROJECT. BUILDING PERMIT APPLICATIONS SHALL BE FILED BY THE OWNER OR HIS REPRESENTATIVE. CONTRACTOR SHALL OBTAIN THE PERMIT AND MAKE FINAL PAYMENT OF THE SAID DOCUMENT.

24. ALL DIMENSIONS SHALL TAKE PRECEDENCE OVER SCALE UNLESS OTHERWISE NOTED.

25. THE CONTRACTOR SHALL PROVIDE THE FIRE MARSHALL APPROVED MATERIALS TO FILL/SEAL PENETRATIONS THROUGH THE FIRE RATE ASSEMBLIES.

27. (N) CONSTRUCTION ADDED TO EXISTING CONSTRUCTION SHALL BE MATCHED IN FORM, TEXTURE, MATERIAL AND PAINT COLOR EXCEPT AS NOTED IN THE PLANS.

28. WHERE SPECIFIED, MATERIALS TESTING SHALL BE TO THE LATEST STANDARDS AVAILABLE AS REQUIRED BY THE LOCAL GOVERNING AGENCY RESPONSIBLE FOR RECORDING THE RESULTS.

29. ALL GENERAL NOTES AND STANDARD DETAILS ARE THE MINIMUM REQUIREMENTS TO BE USED IN CONDITIONS WHICH ARE NOT SPECIFICALLY SHOWN OTHERWISE.

30. ALL DEBRIS AND REFUSE IS TO BE REMOVED FROM THE PROJECT DAILY. PREMISES SHALL BE LEFT IN A CLEAN/SWEPT CONDITION AT ALL TIMES.

31. ALL SYMBOLS AND ABBREVIATIONS ARE CONSIDERED CONSTRUCTION INDUSTRY STANDARDS. IF A CONTRACTOR HAS A QUESTING REGARDING THEIR EXACT MEANING THE ARCHITECT/ENGINEER SHALL BE NOTIFIED FOR CLARIFICATIONS.

32. THE ENGINEER SHALL NOT BE RESPONSIBLE FOR THE METHODS, TECHNIQUES AND SEQUENCES OF PROCEDURES TO PERFORM THE WORK. THE SUPERVISION OF THE WORK IS THE SOLE RESPONSIBILITY OF THE CONTRACTOR.

33. CONTRACTORS SHALL BID WALK THE PROJECT TO ASCERTAIN CONDITIONS WHICH MAY ADVERSELY AFFECT THE WORK OR COST THEREOF.

34. THE CONTRACTOR SHALL FIELD VERIFY ALL EXISTING CONDITIONS, THE DIMENSIONS, ELEVATIONS, ETC. NECESSARY FOR THE PROPER CONSTRUCTION AND ALIGNMENT OF THE (N) WORK TO THE EXISTING WORK. THE CONTRACTOR SHALL MAKE ALL MEASUREMENTS NECESSARY FOR THE FABRICATION AND ERECTION OF STRUCTURAL MEMBERS. ANY DISCREPANCY SHALL BE IMMEDIATELY BROUGHT TO THE ATTENTION OF THE ARCHITECT/ENGINEER. THE CONTRACTOR SHALL BE RESPONSIBLE FOR ALL WORK AND MATERIALS INCLUDING THOSE FURNISHED BY THE SUBCONTRACTOR(S).

35. IT SHALL BE THE RESPONSIBILITY OF THE CONTRACTOR TO LOCATE ALL EXISTING UTILITIES WHETHER SHOWN HEREON OR NOT, AND TO PROTECT THEM FROM DAMAGE. THE CONTRACTOR SHALL BEAR ALL EXPENSE OF REPAIR OR REPLACEMENT IN CONJUNCTION WITH THE EXECUTION OF THIS WORK. GENERAL CONTRACTOR SHALL NOTIFY THE ENGINEER AND ARCHITECT IMMEDIATELY OF ANY DISCREPANCIES FOUND WITHIN THE CONTRACT DOCUMENTS, PRIOR TO STARTING WORK.

36. ALL EXISTING ACTIVE SEWER, WATER, GAS, ELECTRIC, AND OTHER UTILITIES WHERE ENCOUNTERED IN WORK, SHALL BE PROTECTED AT ALL TIMES, AND WHERE REQUIRED FOR THE PROPER EXECUTION OF WORK, SHALL BE RELOCATED AS DIRECTED BY ENGINEERS. EXTREME CAUTION SHOULD BE USED BY THE CONTRACTOR WHEN EXCAVATING OR PIER DRILLING AROUND OR NEAR UTILITIES.

37. ALL EXISTING INACTIVE SEWER, WATER, GAS, ELECTRIC AND OTHER UTILITIES, WHICH INTERFERE WITH THE EXECUTION OF WORK, SHALL BE REMOVED AND SHALL BE CAPPED, PLUGGED OR OTHERWISE DISCONTINUED AT POINTS WHICH WILL NOT INTERFERE WITH THE EXECUTION OF WORK, SUBJECT TO THE APPROVAL OF THE ENGINEER.

38. NO CHANGES ARE TO BE MADE TO THESE PLANS WITHOUT THE KNOWLEDGE AND WRITTEN CONSENT OF THE ARCHITECT/ENGINEER. UNAUTHORIZED CHANGES RENDER THESE DRAWINGS VOID.

39. ANY REFERENCES TO THE WORDS APPROVED, OR APPROVAL IN THESE DOCUMENTS SHALL BE HERE DEFINED TO MEAN GENERAL ACCEPTANCE OR REVIEW AND SHALL NOT RELIEVE THE CONTRACTOR AND/OR HIS SUBCONTRACTORS OF ANY LIABILITY IN FURNISHING THE REQUIRED MATERIALS OR LABOR SPECIFIED.

GENERAL NOTES (CONTINUATION)

40. A PRE-CONSTRUCTION CONFERENCE OF REPRESENTATIVES FROM AFFECTED AGENCIES SHALL BE HELD ON THE JOB AT LEAST ONE (1) WEEK PRIOR TO BEGINNING CONSTRUCTION.

41. DRAWINGS ARE NOT TO BE SCALED UNDER ANY CIRCUMSTANCES, WRITTEN DIMENSIONS TAKE PRECEDENCE OVER SCALE, AND THIS SET OF PLANS IS INTENDED TO BE USED FOR DIAGRAMMATIC PURPOSES ONLY, UNLESS NOTED OTHERWISE. CONTRACTOR SHALL PROVIDE FIELD MEASUREMENTS AS NECESSARY TO COMPLETE ALL WORKS AND THE GENERAL CONTRACTOR'S SCOPE OF WORK SHALL INCLUDE FURNISHING ALL MATERIALS, EQUIPMENT, LABOR, AND ANYTHING ELSE DEEMED NECESSARY TO COMPLETE INSTALLATIONS AS DESCRIBED HEREIN. SYNERGY IS NOT RESPONSIBLE FOR ANY ERRORS RESULTING FROM THIS PRACTICE WRITTEN DIMENSIONS TAKE PRECEDENCE OVER SCALE SHOWN ON PLANS.

42. DETAILS INCLUDED HEREIN ARE INTENDED TO SHOW END RESULT OF DESIGN. MINOR MODIFICATIONS MAY BE REQUIRED TO SUIT JOB CONDITIONS OR SITUATIONS, AND SUCH MODIFICATIONS SHALL BE INCLUDED AS PART OF THE SCOPE OF WORK.

SITE PREPARATION NOTES

1. THE PREPARATION OF THE SITE FOR CONSTRUCTION SHALL INCLUDE THE REMOVAL OF ALL BROKEN CONCRETE, TREE TRUNKS AND ANY OTHER DEBRIS THAT MIGHT DAMAGE THE FOOTINGS OF THE (N) STRUCTURE.

2. BACKFILL ALL TRENCHES WITH CLEAN, STERILE SOIL HAVING A SAND EQUIVALENT OF 30% OR GREATER. BACKFILL IN 8 INCH LAYERS, MOISTURE CONDITIONED AND PROPERLY COMPACTED. ADEQUATE DRAINAGE SHALL BE PROVIDED SUCH THAT NO PONDING OCCURS.

3. ALL FOUNDATION FOOTINGS SHALL EXTEND INTO AND BEAR AGAINST NATURAL UNDISTURBED SOIL OR APPROVED COMPACTED FILL. FOOTINGS SHALL EXTEND INTO SOIL DEPTH AS INDICATED IN PLANS.

4. SHOULD ANY LOOSE FILL, EXPANSIVE SOIL, GROUND WATER OR ANY OTHER UNEXPECTED CONDITIONS BE ENCOUNTERED DURING THE EXCAVATION FOR THE (N) FOUNDATION, THE ARCHITECT/ENGINEER SHALL BE NOTIFIED AND ALL FOUNDATION WORK SHALL CEASE IMMEDIATELY.

5. WITHIN AN AREA A MINIMUM OF 5 FEET BEYOND THE BUILDING LIMITS, EXCAVATE A MINIMUM OF 4" OF EXISTING SOIL. REMOVE ALL ORGANICS, PAVEMENT, ROOTS, DEBRIS AND OTHERWISE UNSUITABLE MATERIAL.

6. THE SURFACE OF THE EXPOSED SUBGRADE SHALL BE INSPECTED BY PROBING OR TESTING TO CHECK FOR POCKETS OF SOFT OR UNSUITABLE MATERIAL. EXCAVATE UNSUITABLE SOIL AS DIRECTED BY THE GEOTECHNICAL ENGINEER/TESTING AGENCY.

7. PROOF ROLL THE SURFACE OF THE EXPOSED SUBGRADE WITH A LOADED TANDEM AXLE DUMP TRUCK. REMOVE ALL SOILS WHICH PUMP OR DO NOT COMPACT PROPERLY AS DIRECTED BY THE GEOTECHNICAL ENGINEER/TESTING AGENCY.

8. FILL ALL EXCAVATED AREAS WITH APPROVED CONTROLLED FILL. PLACE IN 8" LOOSE LIFTS AND THE MAXIMUM DRY DENSITY IN ACCORDANCE WITH ASTM D-698. COMPACT TO A MINIMUM OF 90% RELATIVE COMPACTION

9. ANY STRUCTURAL DRAWINGS HERE IN REPRESENT THE FINISHED STRUCTURE. THE CONTRACTOR SHALL PROVIDE ALL TEMPORARY GUYING AND BRACING REQUIRED TO ERECT AND HOLD THE STRUCTURE IN PROPER ALIGNMENT UNTIL ALL STRUCTURAL WORK AND CONNECTIONS HAVE BEEN COMPLETED. THE INVESTIGATION, DESIGN, SAFETY, ADEQUACY AND INSPECTION OF ERECTION BRACING, SHORING, TEMPORARY SUPPORTS, ETC. IS THE SOLE RESPONSIBILITY OF THE CONTRACTOR.

10. THE ARCHITECT/ENGINEER IS NOT RESPONSIBLE FOR COMPLICATIONS, DAMAGES, INJURY, OR DEATH ARISING OUT OF ANY KIND OF NEGLIGENCE PRIOR TO COMPLETION OF THE FINISHED STRUCTURE.

11. PRIOR TO STARTING CONSTRUCTION, THE CONTRACTOR SHALL PROTECT ALL AREAS FROM DAMAGE WHICH MAY OCCUR DURING CONSTRUCTION. ANY DAMAGE TO (N) OR EXISTING SURFACES, STRUCTURES OR EQUIPMENT SHALL BE IMMEDIATELY REPAIRED OR REPLACED TO THE SATISFACTION OF THE PROPERTY OWNER. THE CONTRACTOR SHALL BEAR THE EXPENSE OF REPAIRING OR REPLACING ANY DAMAGED AREAS.

12. WHEN REQUIRED STORAGE OF MATERIALS OCCURS, THEY SHALL BE EVENLY DISTRIBUTED OVER THE FLOOR OR ROOF SO AS NOT TO EXCEED THE DESIGNED LIVE LOADS FOR THE STRUCTURE. TEMPORARY SHORING OR BRACING SHALL BE PROVIDED WHERE THE STRUCTURE OR SOIL HAS NOT ATTAINED THE DESIGN STRENGTH FOR THE CONDITIONS PRESENT.

13. PRIOR TO PROCEEDING WITH ANY WORK WITHIN AN EXISTING FACILITY, THE CONTRACTOR SHALL FAMILIARIZE HIMSELF WITH EXISTING STRUCTURAL AND OTHER CONDITIONS. IT SHALL BE THE CONTRACTOR'S RESPONSIBILITY TO PROVIDE ALL NECESSARY BRACING, SHORING AND OTHER SAFEGUARDS TO MAINTAIN ALL PARTS OF THE EXISTING WORK IN A SAFE CONDITION DURING THE PROCESS OF DEMOLITION AND CONSTRUCTION AND TO PROTECT FROM DAMAGE THOSE PORTIONS OF THE EXISTING WORK WHICH ARE TO REMAIN.

SHOP DRAWING REVIEW

1. REVIEW BY THE ARCHITECT/ENGINEER IS FOR GENERAL COMPLIANCE WITH THE DESIGN CONCEPT AND THE CONTRACT DOCUMENTS. MARKINGS OR COMMENTS SHALL NOT BE CONSTRUED AS RELIEVING THE CONTRACTOR FROM COMPLIANCE WITH THE PROJECT PLANS AND SPECIFICATIONS, NOR DEPARTURES THERE FROM. THE CONTRACTOR REMAINS RESPONSIBLE FOR DETAILS AND ACCURACY, FOR CONFIRMING AND CORRELATING ALL QUANTITIES AND DIMENSIONS, FOR SELECTION FABRICATION PROCESSES.

LANDLORD/LESSOR NOTES

1. A PRECONSTRUCTION CONFERENCE OF REPRESENTATIVES FROM APPLICABLE AGENCIES SHALL BE HELD ON SITE AT LEAST ONCE PRIOR TO BEGINNING CONSTRUCTION AT WHICH TIME A CONSTRUCTION SCHEDULE AND 24-HOUR CONTACT INFORMATION SHALL BE PROVIDED TO LANDLORD/LESSOR.

2. CONTRACTOR SHALL MAINTAIN ACCESS TO THE SITE AT ALL TIMES FOR LANDLORD/LESSOR PERSONNEL. OPEN TRENCHES SHALL BE PROPERLY PLATED AT THE END OF EACH WORKING DAY TO ALLOW FOR 24-HOUR LANDLORD/LESSOR ACCESS TO THE SITE.

3. THE CONTRACTOR AND CELL CARRIER SHALL BE RESPONSIBLE FOR ANY DAMAGE DUE TO CONSTRUCTION ACTIVITIES TO THE EXISTING SITE AND SHALL RETURN DAMAGED FACILITIES TO EXISTING CONDITION OR BETTER AT NO COST TO THE LANDLORD/LESSOR.

4. THE CONTRACTOR SHALL NOTIFY UNDERGROUND SERVICE ALERT (DIG ALERT) AT LEAST TWO (2) WORKING DAYS PRIOR TO BEGINNING CONSTRUCTION AT 1-800-422-4133.

5. ALL (N) AND EXISTING FACILITIES OWNED BY THE REPRESENTED CELLULAR CARRIER SHALL BE PROPERLY TAGGED IDENTIFYING THE OWNER'S NAME AND 24-HOUR PHONE NUMBER.

6. THE CONTRACTOR IS RESPONSIBLE TO ENSURE THE SITE IS SECURE DURING BOTH WORKING AND NON-WORKING HOURS.

ACCESSIBILITY EXCEPTION NOTES

1. SECTION 11B-203.4: LIMITED ACCESS SPACES - SPACES NOT CUSTOMARILY OCCUPIED AND ACCESSED ONLY BY LADDERS, CATWALKS, CRAWL SPACES OR VERY NARROW PASSAGEWAYS SHALL NOT BE REQUIRED TO COMPLY WITH THESE REQUIREMENTS OR TO BE ON AN ACCESSIBLE ROUTE.

2. SECTION 11B-203.5: MACHINERY SPACES - SPACES FREQUENTED ONLY BY SERVICE PERSONNEL FOR MAINTENANCE, REPAIR OR OCCASIONAL MONITORING OF EQUIPMENT SHALL NOT BE REQUIRED TO COMPLY WITH THIS REQUIREMENT OR TO BE ON AN ACCESSIBLE ROUTE. MACHINERY SPACES INCLUDE, BUT ARE NOT LIMITED TO, ELEVATOR PITS OR ELEVATOR PENTHOUSES; MECHANICAL. ELECTRICAL OR COMMUNICATIONS EQUIPMENT ROOMS; PIPING OR EQUIPMENT CATWALKS; WATER OR SEWAGE TREATMENT PUMP ROOMS AND STATIONS; ELECTRIC SUBSTATIONS AND TRANSFORMER VAULTS; AND HIGHWAY AND TUNNEL FACILITIES.

GENERAL RF NOTES

1. ALL ANTENNAS AND ANTENNA CABLE SHALL BE FURNISHED BY T-MOBILE WIRELESS AND INSTALLED BY ANTENNA INSTALLATION CONTRACTOR.

2. PRIOR TO INSTALLATION OF ANTENNAS THE CONTRACTOR SHALL VERIFY THAT THE AZIMUTH AND DIMENSIONS SHOWN ON THE PLANS MATCH ACTUAL FIELD CONDITIONS.

3. ANTENNA INSTALLATION CONTRACTOR SHALL PROVIDE ALL CONDUIT, CABLE TRAYS, GROUND KITS, CLAMPS, GROUNDS, ETC., FOR COMPLETE INSTALLATION OF ANTENNAS AND CABLES SHOWN AND INTENDED AS REQUIRED FOR A COMPLETE OPERATING SYSTEM IN ACCORDANCE WITH T-MOBILE WIRELESS STANDARDS.

4. ANTENNA CONDUIT SHALL INCLUDE FACTORY-MADE LARGE RADIUS SWEEPS AT ALL CHANGES IN DIRECTION. SWEEP RADIUS SHALL BE AS REQUIRED TO MEET COAX MANUFACTURER'S MINIMUM BENDING RADIUS.

5. ALL UNDERGROUND CONDUIT SHALL BE SCHEDULE 40 PVC WITH STEEL BENDS. ALL EXPOSED CONDUIT ABOVE GRADE LEVEL SHALL BE IMC OR RIGID GALVANIZED. ALL EXPOSED CONDUIT PROTECTED IN A BUILDING OR ON A ROOF SHALL BE EMT OR UV STABILIZED, PAINTED, SCHEDULE 80 PVC.

6. IN HIGH TRAFFIC AREAS OR WHERE SUSCEPTIBLE TO DAMAGE CONTRACTOR SHALL PROVIDE FORMED 14 GA GALVANIZED SHEET METAL COVER OVER COAXIAL CABLE ROUTES. WHERE CABLE IS RUN ON THE WALL, ATTACH UNISTRUT TO WALL AND COVER WITH 14 GA GALVANIZED FORMED SHEET METAL COVER OR MATERIAL AS DIRECTED BY T-MOBILE WIRELESS PROJECT MANAGER.

7. VERIFY ROUTE AND LENGTH OF CABLE PRIOR TO CUTTING. ADJUST INDICATED ROUTE AS REQUIRED TO CLEAR EXISTING OBSTRUCTIONS AND MAINTAIN REQUIRED CLEARANCE FROM EXISTING EQUIPMENT AND FACILITIES.

8. MAXIMUM LENGTH OF 7/8" COAXIAL CABLE SHALL BE 140'-0". MAXIMUM LENGTH OF 1-5/8" COAXIAL CABLE SHALL BE 240'-0".

9. VERIFY MODEL NUMBERS OF ANTENNAS WITH T-MOBILE WIRELESS SERVICES.

10. THE CONTRACTOR SHALL PROVIDE TESTING OF ANTENNAS AND SHALL PROVIDE DOCUMENTATION TO THE T-MOBILE WIRELESS PROJECT MANAGER.

11. INSTALL EMBOSSED ALUMINUM IDENTIFICATION TAGS AT THE END OF THE MAIN COAXIAL CABLE RUNS, ALONG WITH THE END OF THE JUMPER CABLE LOCATED WITHIN THE PLINTH SECTION OF THE BTS UNIT.

NOTE:
CONTRACTOR TO FIELD VERIFY ALL (E) CONSTRUCTION CONDITIONS BEFORE SUBMITTAL OF FINAL BIDS, START OF CONSTRUCTION AND OR FABRICATION.

Nov 05, 2015 - 3:19pm

T-Mobile
Stick Together
4100 GUARDIAN ST., SUITE 101
SIMI VALLEY, CA 93063

PROJECT INFORMATION:
TM001 PEPPERDINE KECK BUILDING
SV00586E
24255 PACIFIC COAST HWY.
MALIBU, CA 90263
COUNTY OF LOS ANGELES

CURRENT ISSUE DATE:
11/05/15

ISSUED FOR:
CONSTRUCTION

REV.:	DATE:	DESCRIPTION:	BY:
A	9/17/15	90% CD ISSUED FOR REVIEW	PAD
B	11/05/15	90% CD REVISED PER CHANGE IN S.O.W.	RAS

PLANS PREPARED BY:
Synergy Development Services, INC.
7543 Woodley Ave #201 Van Nuys, CA 91406
Office: (818) 840-0808 Fax: (818) 688-8066

CONSULTANT:
Synergy Development Services, INC.
7543 Woodley Ave #201 Van Nuys, CA 91406
Office: (818) 840-0808 Fax: (818) 688-8066

DRAWN BY:	CHK.:	APV.:
PAD	SYNERGY	AB

LICENSURE:
REGISTERED PROFESSIONAL ENGINEER ADAM BRONNENCRAFT C74190 EXP.6/30/17 CIVIL STATE OF CALIFORNIA

SHEET TITLE:
GENERAL NOTES

SHEET NUMBER: T-2
REVISION: A
SV00586E

ABBREVIATIONS

AB	ANCHOR BOLT
AC	ASPHALTIC CONCRETE
A.C.	AIR CONDITIONING
ADJ	ADJUSTABLE
A.F.F.	ABOVE FINISH FLOOR
ARCH	ARCHITECTURAL
APPROX.	APPROXIMATELY
A.G.L.	ABOVE GRADE LEVEL
A.M.S.L.	ABOVE MEAN SEA LEVEL
BD	BOARD
BLDG	BUILDING
BLKG	BLOCKING
BOT	BOTTOM
BSMT	BASEMENT
BTS	BASE TRANPGEIVER STATION
C	COURSE(S)
CEM	CEMENT
CL	CHAIN LINK
CLG	CEILING
CLR	CLEAR
COL	COLUMN
CONC	CONCRETE
CONST	CONSTRUCTION
CONT	CONTINUOUS
CORR	CORRIDOR
CO	CONDUIT ONLY
DIA	DIAMETER
DBL	DOUBLE
DEPT	DEPARTMENT
DEMO	DEMOLITION
DIM	DIMENSION
DN	DOWN
DR	DOOR
DTL	DETAIL
DWG	DRAWING
(E)	EXISTING
EA	EACH
ELEC	ELECTRIC
ELEV	ELEVATION
EQUIP	EQUIPMENT
EXP	EXPANSION
EXT	EXTERIOR
FA	FIRE ALARM
FB	FLAT BAR
FF	FINISH FLOOR
FH	FLAT HEAD
FIN	FINISH(ED)
FLR	FLOOR
FOS	FACE OF STUDS
FS	FINISH SURFACE
FT	FOOT, FEET
FTG	FOOTING
FW	FINISH WALL
F.G.	FINISH GRADE
FUT	FUTURE
GA	GAUGE
GALV	GALVANIZED
GL	GLASS
GR	GRADE
GYP	GYPSUM
GFCI	GROUND FAULT CIRCUIT INTERRUPT
GND	GROUND
HC	HOLLOW CORE
HDW	HARDWARE
HTR	HEATER
HM	HOLLOW METAL
HORIZ	HORIZONTAL
HR	HOUR
HT	HEIGHT
HV	HIGH VOLTAGE
ID	INSIDE DIMENSION
INS	INSULATION
INT	INTERIOR
JT	JOINT
LAM	LAMINATED
LBS	POUNDS
LT	LIGHT
LA	LIGHTNING ARRESTOR
LNA	LOW NOISE AMPLIFIER
MFR	MANUFACTURER
MAT	MATERIAL
MAX	MAXIMUM
MECH	MECHANICAL
MIN	MINIMUM
MISC	MIPGELLANEOUS
ML	METAL LATH
MO	MASONRY OPENING
MS	MACHINE SCREW
MTD	MOUNTED
MTL	METAL
(N)	(N)
NIC	NOT IN CONTRACT
NO	NUMBER
NTS	NOT TO SCALE
OA	OVERALL
O.C.	ON CENTER
OPNG	OPENING
OPP	OPPOSITE
PARTN	PARTITION
PL	PLATE
PLAS	PLASTER
PLYWD	PLYWOOD
POC	POINT OF CONNECTION
PROP	PROPERTY
PT	PRESSURE TREATED
R	RISER
REQD	REQUIRED
RD	ROOF DRAIN
RM	ROOM
RMS	ROOMS
RO	ROUGH OPENING
SC	SOLID CORE
SCHED	SCHEDULE
SECT	SECTION
SHT	SHEET
SIM	SIMILAR
SPECS	SPECIFICATIONS
SS	STAINLESS STEEL
STL	STEEL
STOR	STORAGE
STRUCT	STRUCTURAL
SUSP	SUSPENDED
SW	SWITCH
SWBO	SWITCHBOARD
THK	THICK
TI	TENANT IMPROVEMENT
TMA	TOWER MOUNTED AMPLIFIER
TOS	TOP OF SURFACE
TS	TUBE STEEL
TYP	TYPICAL
UNO	UNLESS NOTED OTHERWISE
VCT	VINYL COMPOSITION TILE
VERT	VERTICAL
V.I.F.	VERIFY IN FIELD
VG	VERTICAL GRAIN
W/	WITH
WD	WOOD
WR	WATER RESISTANT
WT	WEIGHT
XFMR	TRANSFORMER
@	AT
[	CHANNEL
℄	CENTERLINE
∠	ANGLE
ℙ	PROPERTY LINE

SYMBOLS

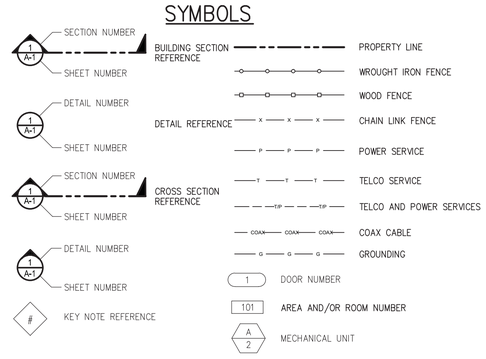

A. GENERAL

1. ALL PAINT PRODUCT LINES SHALL BE SHERWIN WILLIAMS UNLESS SPECIFICALLY NOTED OTHERWISE.

2. CONTRACTOR SHALL PREPARE ALL SURFACES AND APPLY ALL FINISHES PER LATEST EDITION OF MANUFACTURER'S SPECIFICATIONS.

3. COMPLY WITH MANUFACTURER'S WRITTEN INSTRUCTIONS REGARDING SUFFICIENT DRYING TIME BETWEEN COATS WITH PROVISIONS AS RECOMMENDED BY MANUFACTURER FOR EXISTING WEATHER CONDITIONS.

4. FINISH COLOR AND TEXTURE OF ALL PAINTED SURFACES SHALL MATCH EXISTING ADJACENT SURFACES UNLESS OTHERWISE NOTED.

5. ALL PAINT MATERIAL DATA SHEETS SHALL BE PROVIDED TO THE CINGULAR WIRELESS CONSTRUCTION MANAGER.

6. PREPARE PREVIOUSLY PAINTED SURFACE BY LIGHT SANDING WITH 400 GRIT SANDPAPER AND NON-HYDROCARBON WASH. PREPARE GALVANIZED SURFACES BY ACID ETCH OR SOLVENT CLEANING IN ACCORDANCE WITH SSPC-SP1.

7. FURNISH DROP CLOTHES, SHIELDS, MASKING AND PROTECTIVE METHODS TO PREVENT SPRAY OR DROPPINGS FROM DAMAGING ADJACENT SURFACES AND FACILITIES.

8. APPLY PAINT BY AIRLESS SPRAY, SANDING LIGHTLY BETWEEN EACH SUCCEEDING ENAMEL COAT ON FLAT SURFACES. APPLY MATERIAL TO ACHIEVE A COATING NO THINNER THAN THE DRY FILM THICKNESS INDICATED.

9. APPLY BLOCK FILTER TO CONCRETE BLOCK CONSTRUCTION AT A RATE TO ENSURE COMPLETE COVERAGE WITH PORES COMPLETELY FILLED.

10. CONTRACTOR SHALL CORRECT RUNS, SAGS, MISSES AND OTHER DEFECTS INCLUDING INADEQUATE COVERAGE AS DIRECTED BY THE CINGULAR WIRELESS CONSTRUCTION MANAGER. REPAINT AS NECESSARY TO ACHIEVE SURFACES WHICH ARE SMOOTH, EVENLY COATED WITH UNIFORM SHEEN AND FREE FROM BLEMISHES.

B. PAINTING SCOPE

1. PAINT THE FOLLOWING MATERIALS AND SYSTEMS CHECKED BELOW WITH THE COATING SYSTEM INDICATED.

PAINTING SCOPE

SURFACE TO BE PAINTED	COATING SYSTEM	PAINT	DO NOT PAINT	N/A
BTS UNIT				
ALL EQUIPMENT & CABINETS OTHER THAN THE BTS UNIT				
ANTENNA COVERS, TILT BRACKETS, MOUNTING BRACKETS AND ASSOCIATED HARDWARE, CABLE AND CABLE COVERS EXPOSED TO VIEW, EXPOSED CONDUIT AND HANGERS, ETC.				
FLASHING UNITS, METAL TRIM AND OTHER METAL SURFACES				
STUCCO, CONCRETE, CONCRETE BLOCK AND CEMENTIOUS TYPE FINISH SYSTEMS.				
PLYWOOD, LUMBER AND WOOD TRIM INCLUDING THE BACK SIDE OF ALL SCREENWALLS				
DRYWALL				
CONCRETE POLES				
METAL POLES AND METAL POLE STAND-OFF				

C. COATING SYSTEM SPECIFICATIONS

1. DTM ACRYLIC COATING (SERIES B66) BY SHERWIN WILLIAMS CO. 1MIL DFT PER COAT APPLIED IN TWO COATS OVER DTM BONDING PRIMER (B66A50).

2. 100% ACRYLIC, LATEX COATING EQUIVALENT TO A-100 (SERIES A-82) BY SHERWIN WILLIAMS CO. 1 MIL DFT PER COAT APPLIED IN TWO COATS OVER SPECIFIED PRIMER

PAINT & PRIMER

D. ANTENNAS
PRIMER - KEM AQUA E61-W525
TOPCOAT - COROTHANE II B65W200/B60V22

BTS CABINET
PRIMER - KEM AQUA E61-W525
TOPCOAT - COROTHANE II B65W200/B60V22

COAXIAL JUMPER CABLES
PRIMER - AS REQUIRED FOR ADHESION. APPLY ONE COAT OF KEM AQUA WATER REDUCIBLE PRIMER E61W25 REDUCED 25%
TOPCOAT - 2 COATS COROTHANE II POLYURETHANE B65W200/B60V2

RAW STEEL
PRIMER - KEM BOND HS B50WZ4, DMT ACRYLIC PRIMER
TOPCOAT - 2 COATS COROTHANE II POLYURETHANE B65W200/B60V2

GALVANIZED METAL
ACID ETCH WITH COMMERCIAL ETCH OR VINEGAR PRIMER COAT AND FINISH COAT (GALVITE HIGH SOLIDS OR DTM PRIMER/FINISH)

STAINLESS STEEL
PRIMER - OTM WASH PRIMER, B71Y1
TOPCOAT - 2 COATS COROTHANE II POLYURETHANE B65W200/B60V2

PRE-PRIMED STEEL
TOUCH UP ANY RUST OR UN-PRIMED STEEL WITH KEM BOND HS, SS0WZ4

ALUMINUM & COPPER
PRIMER - DTM WASH PRIMER, B71Y1
TOPCOAT - 2 COATS COROTHANE II POLYURETHANE B65W200/B60V2

CONCRETE MASONRY
PRIMER - PRO MAR EXTERIOR BLOCK FILLER
TOPCOAT - 2 COATS A-100 LATEX HOUSE & TRIM, SHEEN TO MATCH

CONCRETE STUCCO(EXISTING)
2 COATS A-100 LATEX HOUSE & TRIM, SHEEN TO MATCH

STUCCO
PRIMER - PRO MAR MASONRY CONDITONER B-46-W21000
TOPCOAT - SUPERPAINT A-80 SERIES A-89 SATIN A-84 GLOSS

WOOD
PRIMER - A-100 EXTERIOR ALKYD WOO9D PRIMER Y-24W20
TOPCOAT - 2 COATS A-100 LATEX HOUSE & TRIM SHEEN TO MATCH ADJACENT SURFACES

FIELD CUTS/DAMAGE(PRIOR TO PRIME & PAINT)
FIRST & SECOND COAT - CUPRINOL CLEAR WOOD PRESERVATIVE #158-0356
ALL PENETRATIONS INTO FINISHED CLU-LAMS SHALL BE CAULKED WITH "SIKAFLEX" SEALANT

STEEL TOUCH UP
STEEL THAT HAS BEEN WELDED, CUT OR SCRATCHED IN THE FIELD SHALL BE TOUCHED UP WITH COLD GALVANIZED PAINT

T-Mobile
Stick Together
4100 GUARDIAN ST., SUITE 101
SIMI VALLEY, CA 93063

PROJECT INFORMATION:

TM001 PEPPERDINE KECK BUILDING
SV00586E

24255 PACIFIC COAST HWY.
MALIBU, CA 90263
COUNTY OF LOS ANGELES

CURRENT ISSUE DATE:

11/05/15

ISSUED FOR:

CONSTRUCTION

REV.:	DATE:	DESCRIPTION:	BY:
A	9/17/15	90% CD ISSUED FOR REVIEW	PAD
B	11/05/15	90% CD REVISED PER CHANGE IN S.O.W.	RAS

PLANS PREPARED BY:

Synergy Development Services, INC.
7543 Woodley Ave #201 Van Nuys, CA 91406
Office: (818) 840-0808 Fax: (818) 688-8066

CONSULTANT:

Synergy Development Services, INC.
7543 Woodley Ave #201 Van Nuys, CA 91406
Office: (818) 840-0808 Fax: (818) 688-8066

DRAWN BY:	CHK.:	APV.:
PAD	SYNERGY	AB

LICENSURE:

REGISTERED PROFESSIONAL ENGINEER ADAM BRONNENGRAVE C74190 EXP.6/30/17 CIVIL STATE OF CALIFORNIA

SHEET TITLE:

SPECIFICATIONS, ABBREVIATIONS AND SYMBOLS

SHEET NUMBER: T-3

REVISION: A

SV00586E

Nov 05, 2015 - 3:19pm

GENERAL NOTES

1. ALL CONSTRUCTION AND WORKMANSHIP SHALL CONFORM TO THE DRAWINGS AND CBC-13 SPECIFICATIONS.

2. THE GENERAL CONTRACTOR SHALL VERIFY ALL DIMENSIONS AND CONDITIONS AT THE JOB SITE AND SHALL BE RESPONSIBLE FOR COORDINATING THE WORK OF ALL TRADES AND CONDITIONS OF ALL WORK AND MATERIALS INCLUDING THOSE FURNISHED BY SUBCONTRACTORS. ANY DISCREPANCIES SHALL BE CALLED TO THE ATTENTION OF THE STRUCTURAL ENGINEER IMMEDIATELY AND SHALL BE RESOLVED BEFORE PROCEEDING WITH THE WORK.

3. STRUCTURAL DRAWINGS SHALL WORK IN CONJUNCTION WITH ARCHITECTURAL, MECHANICAL AND ELECTRICAL DRAWINGS.

4. DESIGN, MATERIALS, EQUIPMENT, AND PRODUCTS OTHER THAN THOSE DESCRIBED OR INDICATED ON THE DRAWINGS MAY BE CONSIDERED FOR USE PROVIDED PRIOR APPROVAL IS OBTAINED FROM THE STRUCTURAL ENGINEER.

5. ALL CONDITIONS SHOWN OR NOTED AS EXISTING ARE BASED ON THE BEST INFORMATION AVAILABLE AT THE TIME OF PREPARATION OF THESE DRAWINGS. NO WARRANTY IS IMPLIED TO THEIR ACCURACY. CONTRACTOR SHALL FIELD VERIFY ALL CONDITIONS. SHOULD CONDITIONS BECOME APPARENT THAT DIFFER FROM THE CONDITIONS SHOWN, THEY SHALL BE BROUGHT TO THE IMMEDIATE ATTENTION OF THE PROFESSIONAL ENGINEER. PROFESSIONAL ENGINEER WILL THEN PREPARE ADDITIONAL DRAWINGS AS MAY BE NEEDED TO ACCOMMODATE THE CONDITIONS AS BROUGHT TO THEIR ATTENTION.

6. MECHANICAL EQUIPMENT MUST BE FIRMLY ATTACHED TO THE STRUCTURE. ISOLATORS, FASTENERS, AND OTHER ELEMENTS PROVIDING STABILITY FOR MECHANICAL EQUIPMENT SHALL BE CAPABLE OF TRANSMITTING CODE REQUIRED LOADS, BUT IN NO EVENT LESS THAN A SHEAR LOAD EQUIVALENT TO 0.45 TIMES THE OPERATING WEIGHT OF THE EQUIPMENT.

7. WATERPROOFING: SEE ARCHITECTURAL DRAWINGS.

8. THE FOUNDATION DESIGN IS BASED ON CBC-13 TABLE 1806.2. ALLOWABLE SOIL BEARING VALUE IS 1500.

9. THE NOTES AND DETAILS ON DRAWINGS SHALL TAKE PRECEDENCE OVER GENERAL STRUCTURAL NOTES AND TYPICAL DETAILS.

10. TYPICAL DETAILS MAY NOT NECESSARILY BE CUT ON PLANS, BUT APPLY UNLESS NOTED OTHERWISE.

CONCRETE

1. ALL POURED-IN-PLACE CONCRETE SHALL HAVE AN ULTIMATE COMPRESSIVE STRENGTH OF 3000 PSI AT 28 DAYS. UNLESS OTHERWISE NOTED, CEMENT TO BE TYPE-8 FROM TESTED STOCK PER ASTM C-150.

2. CONCRETE FORM TOLERANCES SHALL BE WITHIN THE STANDARDS SET BY THE AMERICAN CONCRETE INSTITUTE.

3. ALL REINFORCING STEEL, ANCHOR BOLTS, DOWELS OR OTHER INSERTS SHALL BE SECURED IN POSITION AND INSPECTED BY THE LOCAL BUILDING DEPARTMENT INSPECTOR PRIOR TO THE POURING OF ANY CONCRETE.

4. NO PIPES OR DUCTS SHALL BE PLACED IN STRUCTURAL CONCRETE UNLESS SPECIFICALLY DETAILED. REFER TO ARCHITECTURAL, MECHANICAL, PLUMBING, AND ELECTRICAL DRAWINGS FOR LOCATIONS.

5. FORM EXPOSED CORNERS OF COLUMNS, BEAMS, WALLS, ETC. WITH 3/4" CHAMFERS UNLESS DETAILED OTHERWISE.

6. PROVIDE LIGHT BROOM FINISH ON ALL EXPOSED CONCRETE UNLESS NOTED OTHERWISE.

REINFORCING STEEL

1. REINFORCING STEEL SHALL CONFORM TO ASTM A-615 GRADE 60 U.N.O.

2. BARS SHALL BE CLEAN OF MUD, OIL, OR OTHER COATINGS LIKELY TO IMPAIR BONDING.

3. ALL REINFORCING SHALL BE SECURED IN PLACE PRIOR TO PLACING CONCRETE OR GROUTING MASONRY. ALL REINFORCING SHALL BE CHAIRED TO ENSURE PROPER CLEARANCES. SUPPORT OF FOUNDATION REINFORCING MUST PROVIDE ISOLATION FROM MOISTURE/CORROSION BY USE OF A PLASTIC OR CONCRETE CHAIR. DUCT-TAPE IS NOT AN ACCEPTABLE MOISTURE/CORROSION PROTECTION.

4. REINFORCING STEEL SHALL BE SPLICED AS SHOWN OR NOTED. SPLICES AT OTHER LOCATIONS SHALL BE REVIEWED BY THE STRUCTURAL ENGINEER. ALL VERTICAL WALL REINFORCEMENT SHALL BE CONTINUOUS BETWEEN SPLICE LOCATIONS SHOWN IN THE DRAWINGS.

5. ALL GRADE 60 REINFORCING TO BE WELDED SHALL BE ASTM A706.

6. CLEAR CONCRETE COVERAGE IS AS FOLLOWS:

CAST AGAINST AND PERMANENTLY EXPOSED TO EARTH	3"
EXPOSED TO EARTH OR WEATHER	
#6 OR LARGER	2"
#5 AND SMALLER	1-1/2"
COLUMNS (TO TIES)	1-1/2"
BEAMS (TO STIRRUPS)	1-1/2"
FLAT SLABS	3/4"
WALLS	SEE SCHEDULE AND OR DETAILS
ALL OTHER PER LATEST EDITION OF ACI 318	

STRUCTURAL STEEL

1. THE LABOR, MATERIALS AND EXECUTION REQUIRED FOR ALL CONCRETE WORK AS INDICATED ON THE DRAWINGS SHALL BE IN ACCORDANCE WITH THOSE APPLICABLE PORTIONS OF CHAPTER 22 OF THE LATEST ADOPTED EDITION OF THE CALIFORNIA BUILDING CODE.

2. STRUCTURAL STEEL NOT ENCASED IN CONCRETE SHALL BE SHOP PAINTED WITH TNEMEC99 METAL PRIMER OR APPROVED EQUIVALENT.

3. UNLESS NOTED OTHERWISE, ALL BOLTS SHALL BE ASTM A307. THIS INCLUDES EXPANSION/ADHESIVE ANCHORS. BOLTED CONNECTIONS SHALL CONFORM TO AISC SPECIFICATIONS UNLESS NOTED OTHERWISE ON THE DRAWINGS.

4. UNLESS NOTED OTHERWISE ALL WELDS PER THE LATEST EDITIONS OF THE AWS STANDARDS SHALL CONFORM TO AISC SPECIFICATIONS. WELDING SHALL BE PERFORMED BY WELDERS HOLDING VALID CERTIFICATES AND HAVING CURRENT EXPERIENCE IN THE TYPE OF WELD SHOWN ON THE DRAWINGS OR NOTES. THESE DRAWINGS DO NOT DISTINGUISH BETWEEN SHOP AND FIELD WELDS.

5. CONTRACTOR IS PERMITTED TO CUT AND WELD ANTENNA SUPPORT ASSEMBLY ARMS AS NECESSARY TO MEET THE LENGTH REQUIREMENTS IN THE FIELD. WELDS SHALL CONSIST OF A 3/16" FILLET ALL THE WAY AROUND FOR 1/4" THICK STEEL OR LESS AND 3/8" FILLET WELD FOR STEEL 1/2" THICK OR LESS. CONTRACTOR SHALL RESTORE CORROSION BARRIER WITH AN APPROVED PAINT IN ACCORDANCE WITH BS 729-1971 AND PREN 1029."

STRUCTURAL NOTES (CONTINUATION)

6. MATERIAL CONFORMANCE:
   A. WIDE FLANGE STEEL SECTIONS PER ASTM A572 OR A992 WITH Fy = 50 KSI
   B. PIPES SECTIONS PER ASTM A501 WITH Fy = 36 KSI
   C. TUBE STEEL SECTIONS PER ASTM A500 WITH Fy = 46 KSI
   D. COLD FORMED STEEL PER ASTM A653 WITH Fy = 50 KSI
   E. WELDING ELECTRODES PER AWS CODE, E70XX UNLESS NOTED OTHERWISE ON PLANS
   F. ALL OTHER MISCELLANEOUS STEEL SHALL BE ASTM A36 WITH Fy = 36 KSI UNLESS NOTED OTHERWISE ON THE PLANS

ADHESIVE / MECHANICAL ANCHORS

1. ALL POST-INSTALLED ANCHORS SHALL BE PER SIMPSON OR HILTI MANUFACTURING AS INDICATED ON THE PLANS.

2. MECHANICAL ANCHORS SHALL BE INSTALLED IN ACCORDANCE WITH THE FOLLOWING APPROVAL CODES:
   FOR SIMPSON STRONG BOLT 2 ANCHORS, INSTALLATION SHALL COMPLY WITH ICC-ES ESR-3037 AND LARR 25891 FOR ANCHORAGE TO CONCRETE, IAPMO ER-240 AND LARR 25936 FOR ANCHORAGE TO MASONRY.
   FOR HILTI KWIK BOLT ANCHORS, INSTALLATION SHALL COMPLY WITH ICC-ES ESR-1917 AND LARR 25701 FOR ANCHORAGE TO CONCRETE.

   ADHESIVE ANCHORS SHALL BE INSTALLED IN ACCORDANCE WITH THE FOLLOWING APPROVAL CODES:
   FOR SIMPSON SET-XP EPOXY ANCHORS, INSTALLATION SHALL BE IN ACCORDANCE WITH ICC-ES ESR-2508 AND LARR 25744 FOR ANCHORAGE TO CONCRETE, IAPMO UES ER-265 AND LARR 25965 FOR ANCHORAGE TO MASONRY.
   FOR HILTI HIT-HY 200 EPOXY ANCHORS, INSTALLATION SHALL BE IN ACCORDANCE WITH ICC ESR-3187 AND LARR 25964 FOR ANCHORAGE TO CONCRETE.

3. ALLOW A MINIMUM OF 72 HOURS AFTER NEW CONCRETE IS PLACED PRIOR TO LOCATING MECHANICAL OR ADHESIVE ANCHORS. ALL MECHANICAL/ADHESIVE ANCHORS REQUIRE SPECIAL STRUCTURAL INSPECTION PER THE BUILDING CODE.

MASONRY

1. CONCRETE MASONRY UNITS SHALL CONFORM TO ASTM C90, MEDIUM WEIGHT, GRADE N WITH Fm = 1500 PSI.

2. MORTAR TYPE S, Fm = 1800 PSI

3. PROVIDE EXPANSION JOINTS IN MASONRY WALLS EVERY 24'-0" O.C.

4. VERTICAL REINFORCING SHALL BE 1 #5 VERTICAL IN CENTER OF GROUTED CELL CONTINUOUS FULL HEIGHT OF WALL AT ALL CORNERS, INTERSECTIONS, WALL ENDS, BEAM BEARINGS, JAMBS, EACH SIDE OF CONTROL JOINTS AND AT INTERVALS NOT TO EXCEED 48" O.C. UNLESS NOTED OTHERWISE ON THE PLANS. TIE AT 8'-0" O.C. VERTICALLY WITH SINGLE WIRE LOOP TIE BY AA WIRE PRODUCTS COMPANY OR EQUIALENT. DOWEL VERTICAL REINFORCING TO FOUNDATION WITH DOWELS TO MATCH VERTICAL REINFORCING.

5. HORIZONTAL REINFORCING SHALL CONSIST OF 2 #5 CONTINUOUS AT ELEVATED FRAMING ASSEMBLIES. 1 #5 CONTINUOUS AT TOP OF PARAPETS AND FREESTANDING WALLS. PLACE THESE BARS CONTINUOUS THROUGH CONTROL JOINTS. INSTALL BENT BARS TO MATCH HORIZONTAL REINFORCING AT CORNERS AND INTERSECTIONS TO MAINTAIN BOND BEAM CONTINUITY. STANDARD WEIGHT (NO. 9 GAGE WIRE) DUR-O-WALL OR DUR-O-WIRE (OR EQUIVALENT) LADDER TYPE JOINT REINFORCING AT 16" O.C. LAP LADDER TYPE JOINT REINFORCING 12" MINIMUM.

6. LAP SPLICES FOR VERTICAL AND HORIZONTAL REINFORCING SHALL BE PER TYPICAL DETAILS. DO NOT SPLICE WITHIN 8'-0" OF CONTROL JOINTS.

WOOD

1. IN STUD WALLS, UNLESS NOTED OTHERWISE, INSTALL DOUBLE STUDS AT ALL JAMBS, CORNERS, INTERSECTIONS AND AT ISOLATED BEARING POINTS OF FRAMING MEMBERS ABOVE. EVERY OTHER STUD OF WOOD FRAME BEARING WALL SHALL HAVE A SIMPSON H3 ANCHOR TOP AND BOTTOM, EXCEPT AT THOSE WALLS WHERE PLYWOOD SHEATHING IS NAILED DIRECTLY TO THE TOP AND BOTTOM PLATES. PROVIDE 2X SOLID BLOCKING AT MID-HEIGHT OF BEARING STUD WALLS.

2. SAWN LUMBER FRAMING SHALL COMPLY WITH THE LATEST EDITION OF THE GRADING RULES OF THE WWPA OR THE WCLIB. ALL SAWN LUMBER SHALL BE STAMPED WITH THE GRADE MARK OF AN APPROVED LUMBER GRADING AGENCY AND SHALL HAVE MINIMUM PROPERTIES WHICH MEET OR EXCEED THE FOLLOWING WOOD TYPES:

MEMBER	WOOD TYPE
JOISTS	
2X4 (PANELIZED)	D.F. SELECT
2X4	D.F. #2
2X6 OR LARGER	D.F. #2
BEAMS	
WIDTH OF 4" OR LESS	D.F. #1
WIDTH GREATER THAN 4"	D.F. SELECT
LEDGERS AND TOP PLATES	D.F.#2
STUDS	
2X4	D.F. STD
2X6 OR LARGER	D.F. #2
POSTS	
4X4	D.F. #2
6X6 OR LARGER	D.F. SELECT

3. GLU-LAMINATED BEAMS SHALL HAVE THE FOLLOWING MINIMUM PROPERTIES: Fb = 2,400 PSI, Fy = 240 PSI, E = 1,800,000 PSI. BEAMS CANTILEVERING OVER SUPPORTS SHALL HAVE THE SPECIFIED MINIMUM PROPERTIES TOP AND BOTTOM. ALL BEAMS SHALL BE FABRICATED USING WATERPROOF GLUE. FABRICATION AND HANDLING PER LATEST AITC AND WCLA STANDARDS. BEAMS TO BEAR GRADE STAMP AND AITO STAMP AND CERTIFICATE. CAMBER AS SHOWN ON DRAWINGS. IN THE ABSENCE OF CAMBER SHOWN ON THE PLAN, PROVIDE STANDARD CAMBER. STANDARD CAMBER IS DEFINED AS A RADIUS OF CURVATURE EQUAL TO 2500 FEET.

4. PLYWOOD SHALL BE APA "CDX" RATED SHEATHING OR BETTER AND SHALL BEAR THE STAMP OF AN APPROVED TESTING AGENCY. LAY UP PLYWOOD WITH FACE GRAIN PERPENDICULAR TO SUPPORTS. (ON ROOFS WHERE PLYWOOD IS LAYED UP WITH FACE GRAIN PARALLEL TO SUPPORTS, USE A MINIMUM OF 5-PLY PLYWOOD). STAGGER JOINTS. ALL NAILING SHALL BE COMMON NAILS UNLESS NOTED OTHERWISE. WHERE SCREWS ARE INDICATED FOR WOOD TO WOOD ATTACHMENTS, USE WOOD SCREWS. ALL PLYWOOD SHALL BE OF THE FOLLOWING NOMINAL THICKNESS, SPAN/INDEX RATIO AND SHALL BE ATTACHED AS FOLLOWS UNLESS NOTED OTHERWISE.

USE	THICKNESS	SPAN/INDEX RATIO	ATTACHMENT EDGE	INTERMEDIATE
ROOF	5/8"	32/16	10d@6" O.C.	10d@12" O.C.
ROOF	3/4"	40/20	10d@6" O.C.	10d@12" O.C.
FLOOR	3/4"	40/20	SCREWS@6" O.C.	SCREWS@12" O.C.
SHEAR WALL	3/8"	24/0	8d@6" O.C.	8d@12" O.C.

FIBER REINFORCED PLASTIC (FRP)

1. ALL CONNECTIONS SHALL BE 5/8" DIAMETER FIBER BOLTS, U.N.O. (PULTEX 1625 OR EQUIVALENT) AND ALL HOLES UNLESS NOTED OTHERWISE SHALL BE PUNCHED OR DRILLED 1/16" LARGER IN DIAMETER THAN THE BOLTS THEY RECEIVE.

2. ALL CONTACT SURFACES OF FRP STRUCTURAL SHAPES AND/OR HYBRID POLYMER COMPOSITE ARCHITECTURAL PANELS SHALL BE BONDED PER MANUFACTURER'S RECOMMENDATIONS. USE 1/4" FRP SCREEN SKIN AND EPOXY GLUE SKIN TO FRAMING MEMBERS WITH 5/8" DIAMETER FIBER BOLTS AT 24" O.C. EIFS SHALL MATCH BUILDING AND BE ATTACHED IN ACCORDANCE WITH THE MANUFACTURER'S RECOMMENDATIONS.

3. ALL LIQUID NAILS MULTI-PURPOSE CONSTRUCTION ADHESIVE SHALL BE PER MACCO OR APPROVED EQUIVALENT. BONDING SURFACE SHALL BE CAREFULLY PREPARED TO ENSURE A GOOD ADHESIVE BOND BY WIPING THE SURFACE WITH A STERILIZING SOLVENT, REMOVING SURFACE GLOSS BY LIGHT SANDING, APPLY ADHESIVE, AND FASTEN OR CLAMP BONDING SURFACES UNTIL CURED.

4. ALL EXPOSED JOINTS AT ARCHITECTURAL PANELS AHD SHAPES (EDGES, CORNERS, ETC.) SHALL BE CAULKED WITH AN APPROVED FLEXIBLE POLYURETHANE SEALANT/CAULK.

5. ALL OPEN ENDS OR GAPS OF SCREEN FRAMING WHERE WATER SUSCEPTIBLE TO WATER INFILTRATION SHALL BE WEATHER CAPPED OR SEALED BY THE GENERAL CONTRACTOR.

6. ALL FRP MATERIAL TO BE LOCATED IN THE CITY OF LOS ANGELES SHALL CONFORM TO LARR 25536.

7. ALL FRP MATERIAL SHALL CONFORM TO ASTM D-638, 695, 790, 2344, 732, ADDITIONALLY WITH BOLTS CONFORMING TO ASTM B-565. ALL FRP MATERIAL SHALL HAVE THE FOLLOWING MINIMUM PROPERTIES FOR ALLOWABLE STRESS DESIGN (BASED ON A SAFETY FACTOR OF 7). VALUES ARE REPRESENTED IN KSI.

8. ALL FRP MATERIAL SHALL CONFORM TO ASTM D-638, 695, 790, 2344, 732, ADDITIONALLY WITH BOLTS CONFORMING TO ASTM B-565. ALL FRP MATERIAL SHALL HAVE THE FOLLOWING MINIMUM PROPERTIES FOR ALLOWABLE STRESS DESIGN (BASED ON A SAFETY FACTOR OF 7). VALUES ARE REPRESENTED IN KSI.

MECHANICAL PROPERTY	LENGTHWISE	CROSSWISE
TENSILE STRESS Ft	4.3	1.0
COMPRESSIVE STRESS Fc	4.3	2.1
FLEXURAL STRESS Fy	4.3	1.4
MODULUS OF ELASTICITY E	2.8X10^6	--
SHEAR Fv	0.6	--
BOLT SHEAR	1.2	--

SPECIAL STRUCTURAL INSPECTION - STRUCTURAL ONLY

1. SPECIAL STRUCTURAL INSPECTION IS TO BE PROVIDED FOR THE ITEMS LISTED BELOW IN ADDITION TO THE INSPECTIONS CONDUCTED BY THE BUILDING JURISDICTION. SPECIAL STRUCTURAL INSPECTION IS REQUIRED FOR THE FOLLOWING:

VERIFICATION AND INSPECTION	INSPECTION TYPE CONTINUOUS	INSPECTION TYPE PERIODIC	REFERENCE STANDARD
STEEL CONSTRUCTION			
WELDING			
AT FLOOR AND ROOF DECK WELDS		X	AWS D1.3
FOR REINFORCING STEEL		X	AWS D1.4, ACI 318
FOR STRUCTURAL STEEL		X	
CONCRETE CONSTRUCTION			
REINFORCING STEEL		X	ACI 318: 3.5, 7.1-7.7
POST-INSTALLED ANCHORS		X	ACI 318: 3.8.6, 8.1.3, 21.2.8
USE OF REQUIRED DESIGN MIX		X	ACI 318: CHAPER 4, 5.2-5.4
MASONRY CONSTRUCTION			TMS 402 AND 602/ ACI 530/ASCE 5, 6
REINFORCING STEEL		X	
GROUT PLACEMENT	X		
CLEANOUTS PRIOR TO CLOSURE		X	
POST-INSTALLED ANCHORS	X		LARR 25891, LARR 25701 LARR 25965, LARR 25964

2. THE SPECIAL INSPECTOR SHALL OBSERVE THE WORK ASSIGNED TO BE CERTAIN THAT IT CONFORMS TO THE APPROVED DESIGN DRAWINGS AND SPECIFICATIONS. THE SPECIAL INSPECTOR IS NOT AUTHORIZED TO APPROVE DEVIATIONS FROM THE DESIGN DRAWINGS OR SPECIFICATIONS AND ALL DEVIATIONS MUST BE APPROVED BY THE ENGINEER OF RECORD PRIOR TO PROCEEDING WITH THE WORK. ALL REQUESTS FOR DEVIATIONS SHALL BE INITIATED BY THE CONTRACTOR VIA A WRITTEN REQUEST FOR INFORMATION.

3. THE SPECIAL INSPECTOR SHALL FURNISH INSPECTION REPORTS TO THE BUILDING OFFICIAL AND TO THE ENGINEER OF RECORD. ALL DISCREPANCIES SHALL BE BROUGHT TO THE IMMEDIATE ATTENTION OF THE CONTRACTOR FOR CORRECTION, THEN, IF UNCORRECTED TO THE DESIGN AUTHORITY AND THE BUILDING OFFICIAL.

4. CONTRACTOR IS RESPONSIBLE FOR PROVIDING THE SPECIAL INSPECTOR ACCESS TO ALL ITEMS REQUIRING SPECIAL INSPECTION. INSPECTOR IS NOT AUTHORIZED TO OPERATE CONTRACTOR'S EQUIPMENT.

5. FOR ADDITIONAL INFORMATION ON SPECIAL STRUCTURAL INSPECTIONS, CONTACT THE ENGINEER OF RECORD PRIOR TO START OF CONSTRUCTION.

T-Mobile
Stick Together
4100 GUARDIAN ST., SUITE 101
SIMI VALLEY, CA 93063

PROJECT INFORMATION:

TM001 PEPPERDINE KECK BUILDING
SV00586E

24255 PACIFIC COAST HWY.
MALIBU, CA 90263
COUNTY OF LOS ANGELES

CURRENT ISSUE DATE:

11/05/15

ISSUED FOR:

CONSTRUCTION

REV.:	DATE:	DESCRIPTION:	BY:
A	9/17/15	90% CD ISSUED FOR REVIEW	PAD
B	11/05/15	90% CD REVISED PER CHANGE IN S.O.W.	RAS

PLANS PREPARED BY:

Synergy
Development Services, INC.
7543 Woodley Ave #201 Van Nuys, CA 91406
Office: (818) 840-0808 Fax: (818) 688-8066

CONSULTANT:

Synergy
Development Services, INC.
7543 Woodley Ave #201 Van Nuys, CA 91406
Office: (818) 840-0808 Fax: (818) 688-8066

DRAWN BY:	CHK.:	APV.:
PAD	SYNERGY	AB

LICENSURE:

REGISTERED PROFESSIONAL ENGINEER
ADAM BRONNENKANT
C74190
EXP.6/30/17
CIVIL
STATE OF CALIFORNIA

SHEET TITLE:

GENERAL STRUCTURAL NOTES

SHEET NUMBER: T-4

REVISION: A

SV00586E

Nov 05, 2015 - 3:19pm

NOTE:
THESE DRAWINGS HAVE BEEN CREATED BY INFORMATION GATHERED FROM (E) AS-BUILTS PROVIDED BY T-MOBILE AND WITHOUT A SURVEY. PLEASE VERIFY IN FIELD ALL DIMENSIONS, LENGTHS, PROPERTY LINES AND CONDUIT RUNS.

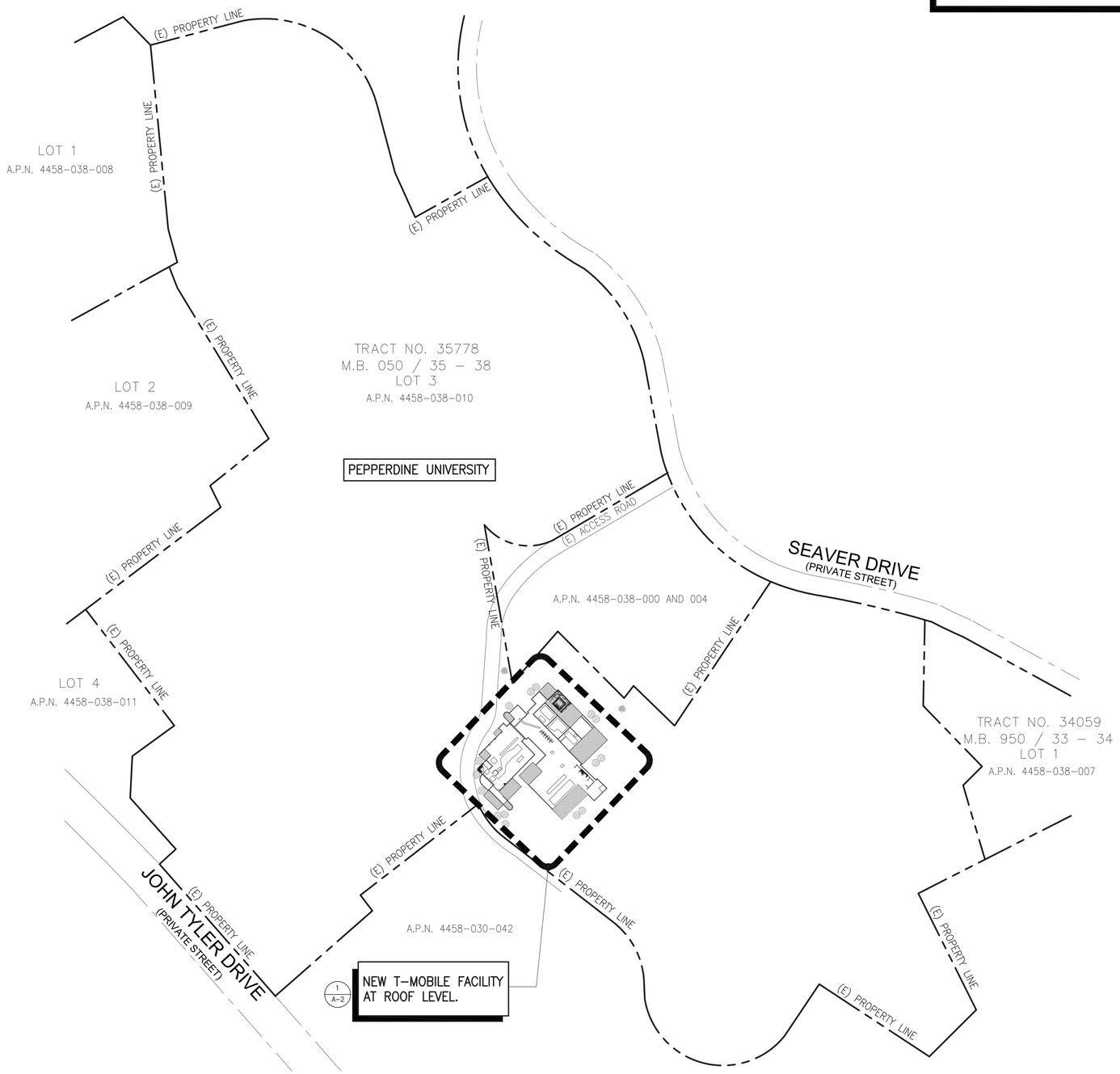

OVERALL SITE PLAN

SCALE: 1"=100'-0" 0 50' 100' 200'

1

Nov 05, 2015 - 3:19pm

T-Mobile
Stick Together

4100 GUARDIAN ST., SUITE 101
SIMI VALLEY, CA 93063

PROJECT INFORMATION:

TM001 PEPPERDINE KECK BUILDING
SV00586E

24255 PACIFIC COAST HWY.
MALIBU, CA 90263
COUNTY OF LOS ANGELES

CURRENT ISSUE DATE:

11/05/15

ISSUED FOR:

CONSTRUCTION

REV.:	DATE:	DESCRIPTION:	BY:
A	9/17/15	90% CD ISSUED FOR REVIEW	PAD
B	11/05/15	90% CD REVISED PER CHANGE IN S.O.W.	RAS

PLANS PREPARED BY:

Synergy
Development Services, INC.
7543 Woodley Ave #201 Van Nuys, CA 91406
Office: (818) 840-0808 Fax: (818) 688-8066

CONSULTANT:

Synergy
Development Services, INC.
7543 Woodley Ave #201 Van Nuys, CA 91406
Office: (818) 840-0808 Fax: (818) 688-8066

DRAWN BY:	CHK.:	APV.:
PAD	SYNERGY	AB

LICENSURE:

REGISTERED PROFESSIONAL ENGINEER
ADAM BRONNENCAN
C74190
EXP.6/30/17
CIVIL
STATE OF CALIFORNIA

SHEET TITLE:

OVERALL SITE PLAN

SHEET NUMBER: A-1

REVISION: A

SV00586E

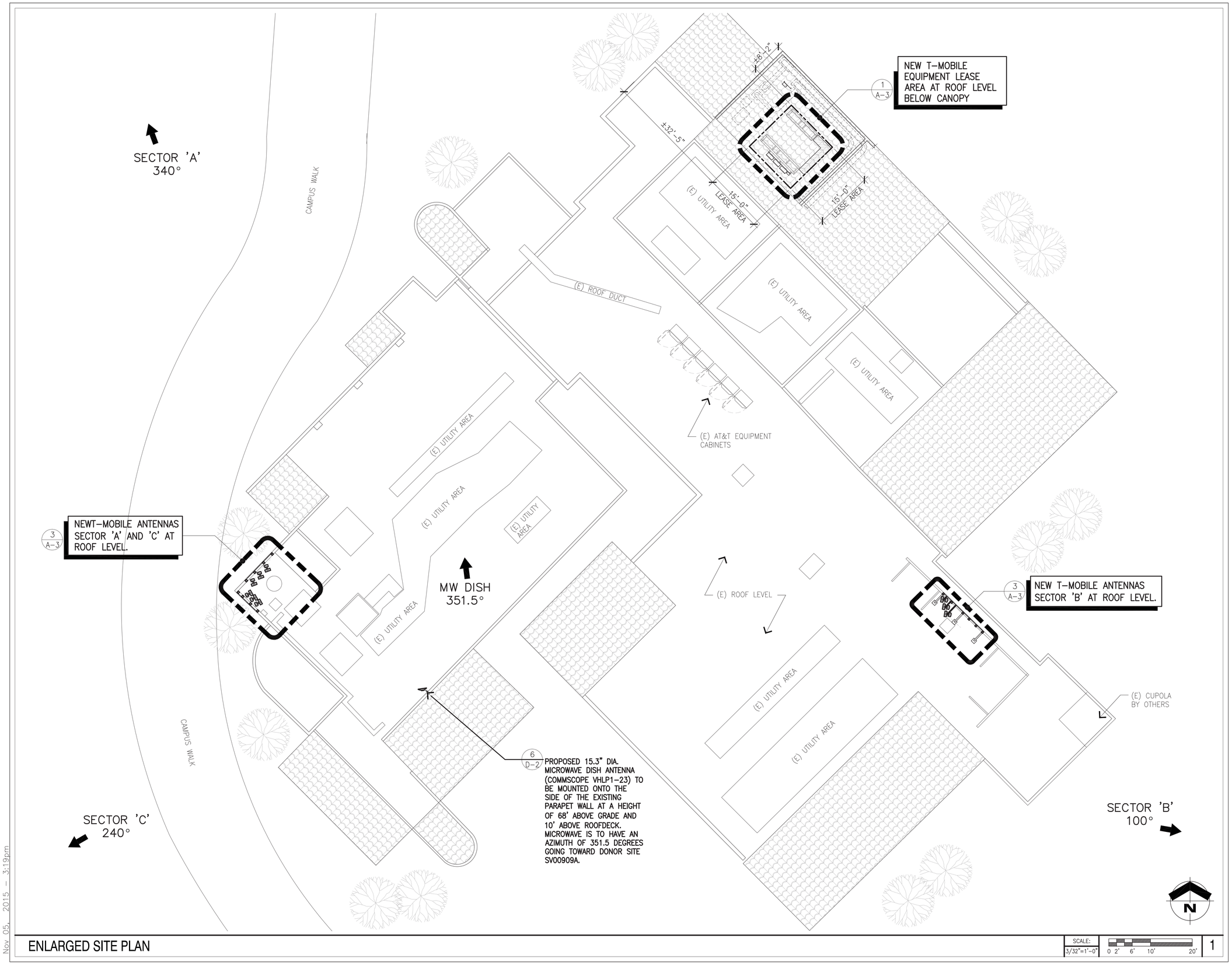

ENLARGED SITE PLAN

SCALE: 3/32"=1'-0" 0 2' 6' 10' 20'

1

Nov 05, 2015 – 3:19pm

T-Mobile
Stick Together

4100 GUARDIAN ST., SUITE 101
SIMI VALLEY, CA 93063

PROJECT INFORMATION:

TM001 PEPPERDINE KECK BUILDING
SV00586E

24255 PACIFIC COAST HWY.
MALIBU, CA 90263
COUNTY OF LOS ANGELES

CURRENT ISSUE DATE:

11/05/15

ISSUED FOR:

CONSTRUCTION

REV.:	DATE:	DESCRIPTION:	BY:
A	9/17/15	90% CD ISSUED FOR REVIEW	PAD
B	11/05/15	90% CD REVISED PER CHANGE IN S.O.W.	RAS

PLANS PREPARED BY:

Synergy
Development Services, INC.
7543 Woodley Ave #201 Van Nuys, CA 91406
Office: (818) 840-0808 Fax: (818) 688-8066

CONSULTANT:

Synergy
Development Services, INC.
7543 Woodley Ave #201 Van Nuys, CA 91406
Office: (818) 840-0808 Fax: (818) 688-8066

DRAWN BY:	CHK.:	APV.:
PAD	SYNERGY	AB

LICENSURE:

REGISTERED PROFESSIONAL ENGINEER
ADAM BRONNENGAN
C74190
EXP.6/30/17
CIVIL
STATE OF CALIFORNIA

SHEET TITLE:

ENLARGED SITE PLAN

SHEET NUMBER: A-2

REVISION: A

SV00586E

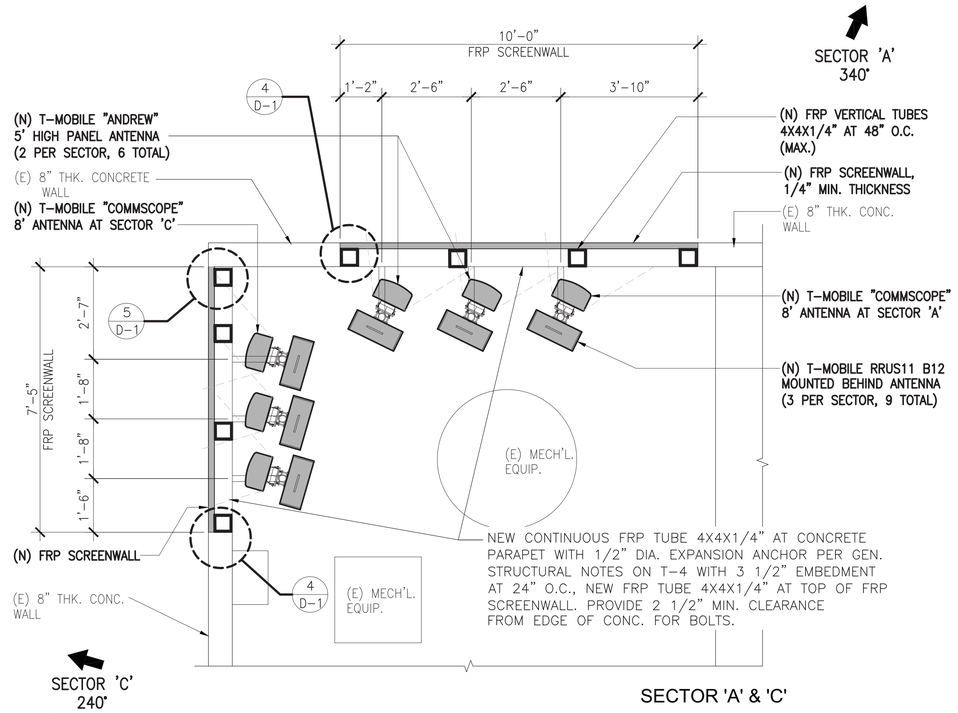

SECTOR 'A' & 'C'

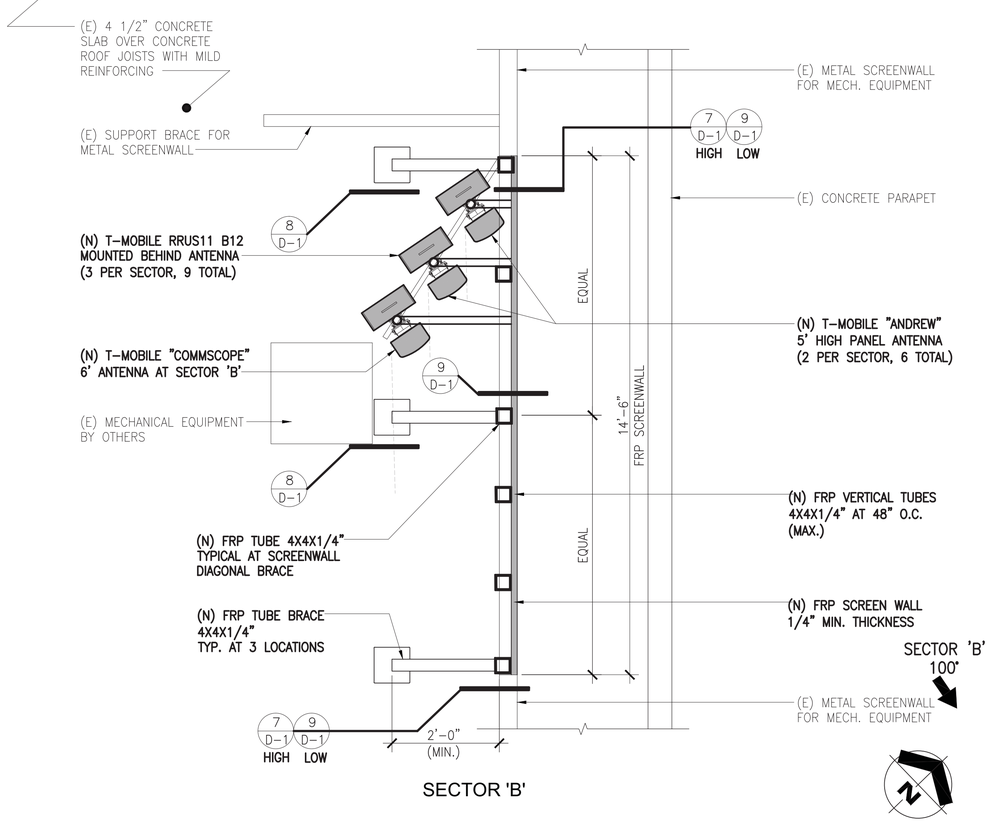

SECTOR 'B'

NEW ANTENNA AND EQUIPMENT LAYOUT PLANS

SCALE: 1/2"=1'-0" (0, 1', 2', 4')

3

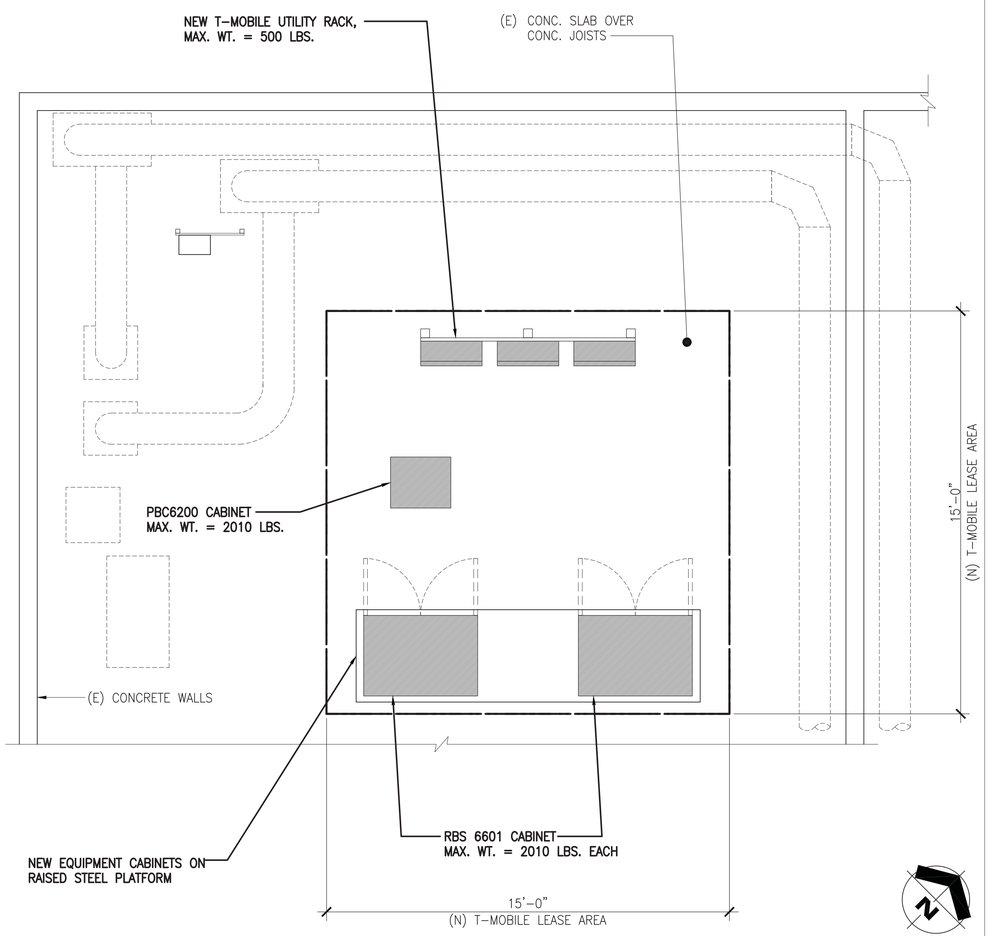

NEW EQUIPMENT LAYOUT PLAN (SEE SHT. A-6 FOR MORE INFO.)

SCALE: 3/8"=1'-0" (0, 1', 2', 5')

1

NEW ANTENNA SCHEDULE

	SECTOR A	SECTOR B	SECTOR C
AZIMUTH	340°	100°	240°
ANTENNA MODEL	TMBXX 6516	TMBXX 6516	TMBXX 6516
ANTENNA MODEL	LNX-6515DS-A1M	DBXNH-6565B	LNX-6515DS-A1M
ANTENNA COUNT	3	3	3
ANTENNA RAD CENTER	65'-6"/67'-4"	67'-0"/67'-11"	64'-0"/65'-10"
COAX TYPE/SIZE			
NUMBER OF COAX			
COAX LENGTH			
MECHANICAL TILT			
ELECTRICAL TILT			

NEW RRU - REMOTE RADIO UNIT

	SECTOR A	SECTOR B	SECTOR C
RRU MODEL	ERICSSON RRUS11 B12	ERICSSON RRUS11 B12	ERICSSON RRUS11 B12
RRU COUNT	3	3	3
RRU MOUNT CENTERLINE			

2

T-Mobile
Stick Together
4100 GUARDIAN ST., SUITE 101
SIMI VALLEY, CA 93063

PROJECT INFORMATION:

TM001 PEPPERDINE KECK BUILDING
SV00586E

24255 PACIFIC COAST HWY.
MALIBU, CA 90263
COUNTY OF LOS ANGELES

CURRENT ISSUE DATE:

11/05/15

ISSUED FOR:

CONSTRUCTION

REV.:	DATE:	DESCRIPTION:	BY:
A	9/17/15	90% CD ISSUED FOR REVIEW	PAD
B	11/05/15	90% CD REVISED PER CHANGE IN S.O.W.	RAS

PLANS PREPARED BY:

Synergy Development Services, INC.
7543 Woodley Ave #201 Van Nuys, CA 91406
Office: (818) 840-0808 Fax: (818) 688-8066

CONSULTANT:

Synergy Development Services, INC.
7543 Woodley Ave #201 Van Nuys, CA 91406
Office: (818) 840-0808 Fax: (818) 688-8066

DRAWN BY:	CHK.:	APV.:
PAD	SYNERGY	AB

LICENSURE:

REGISTERED PROFESSIONAL ENGINEER ADAM BRONNENGRAT C74190 EXP.6/30/17 CIVIL STATE OF CALIFORNIA

SHEET TITLE:

ANTENNA AND EQUIPMENT LAYOUT PLANS

SHEET NUMBER: A-3

REVISION: A

SV00586E

Nov 05, 2015 – 3:19pm

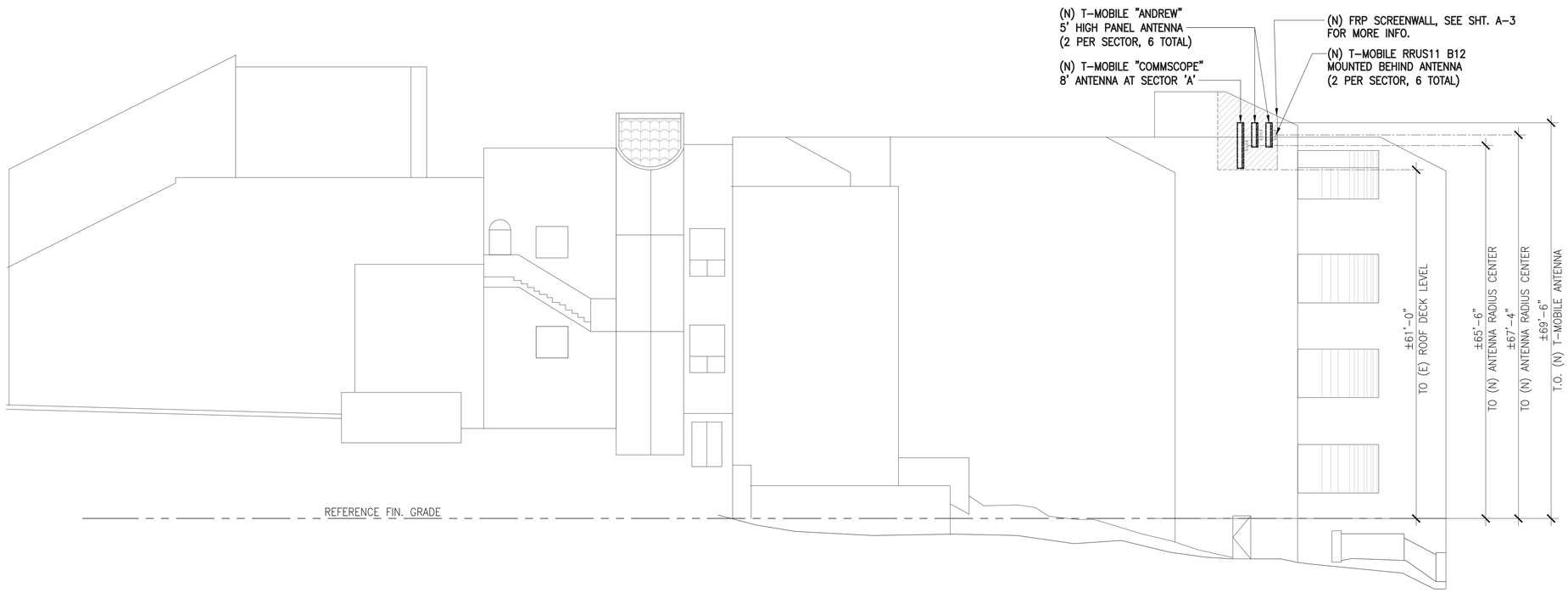

NORTH ELEVATION

SCALE: 3/32"=1'-0" (0 2' 6' 10' 20')

1

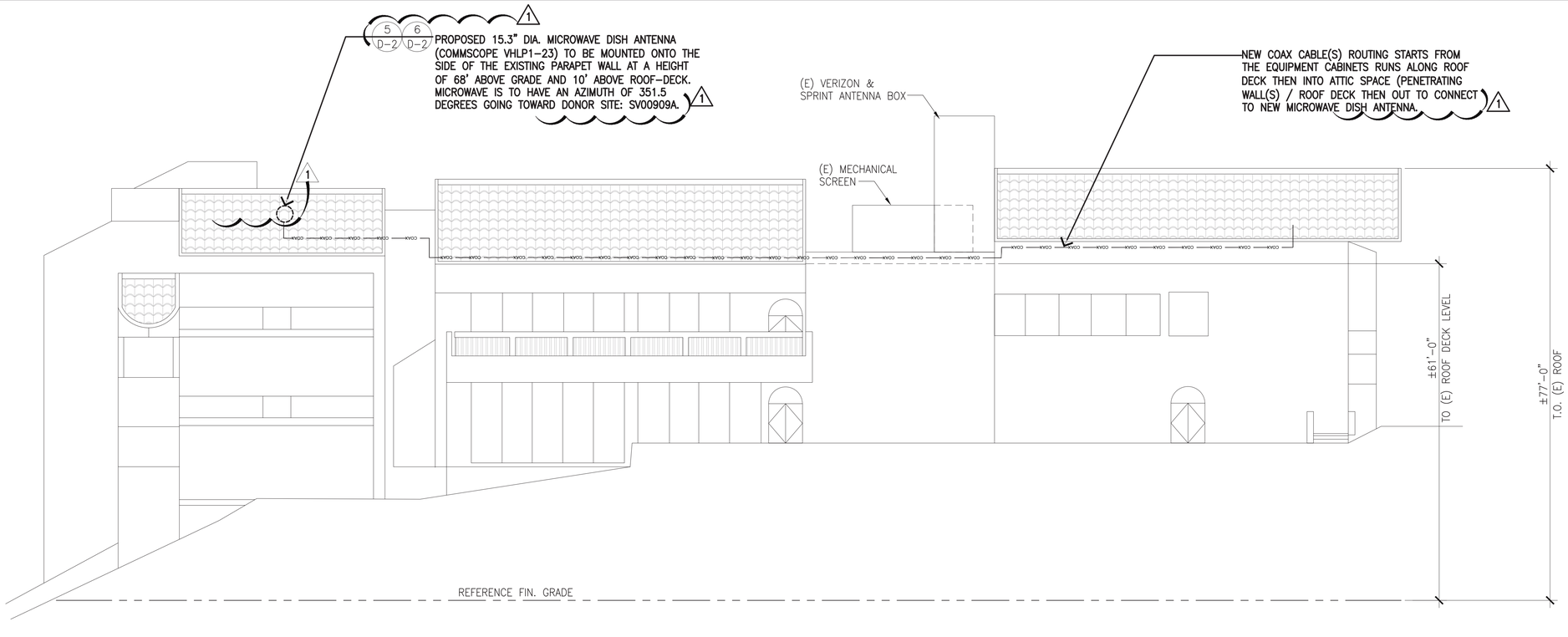

SOUTH ELEVATION

SCALE: 3/32"=1'-0" (0 2' 6' 10' 20')

2

Nov 12, 2015 - 9:53am

T-Mobile
Stick Together

4100 GUARDIAN ST., SUITE 101
SIMI VALLEY, CA 93063

PROJECT INFORMATION:

TM001 PEPPERDINE KECK BUILDING
SV00586E

24255 PACIFIC COAST HWY.
MALIBU, CA 90263
COUNTY OF LOS ANGELES

CURRENT ISSUE DATE:

11/13/15

ISSUED FOR:

CONSTRUCTION

REV.:	DATE:	DESCRIPTION:	BY:
A	9/17/15	90% CD ISSUED FOR REVIEW	PAD
B	11/06/15	90% CD REVISED PER CHANGE IN S.O.W.	RAS
1	11/13/15	100% CD REVISED PER D.R.M. AND B&S PLAN CHECK COMMENTS	RAS

PLANS PREPARED BY:

Synergy
Development Services, INC.
7543 Woodley Ave #201 Van Nuys, CA 91406
Office: (818) 840-0808 Fax: (818) 688-8066

CONSULTANT:

Synergy
Development Services, INC.
7543 Woodley Ave #201 Van Nuys, CA 91406
Office: (818) 840-0808 Fax: (818) 688-8066

DRAWN BY:	CHK.:	APV.:
RAS	SYNERGY	AB

LICENSURE:

REGISTERED PROFESSIONAL ENGINEER
ADAM BRONNENKANT
C74190
EXP.6/30/17
CIVIL
STATE OF CALIFORNIA

SHEET TITLE:

ELEVATIONS

SHEET NUMBER: A-4 1

REVISION: 1

SV00586E

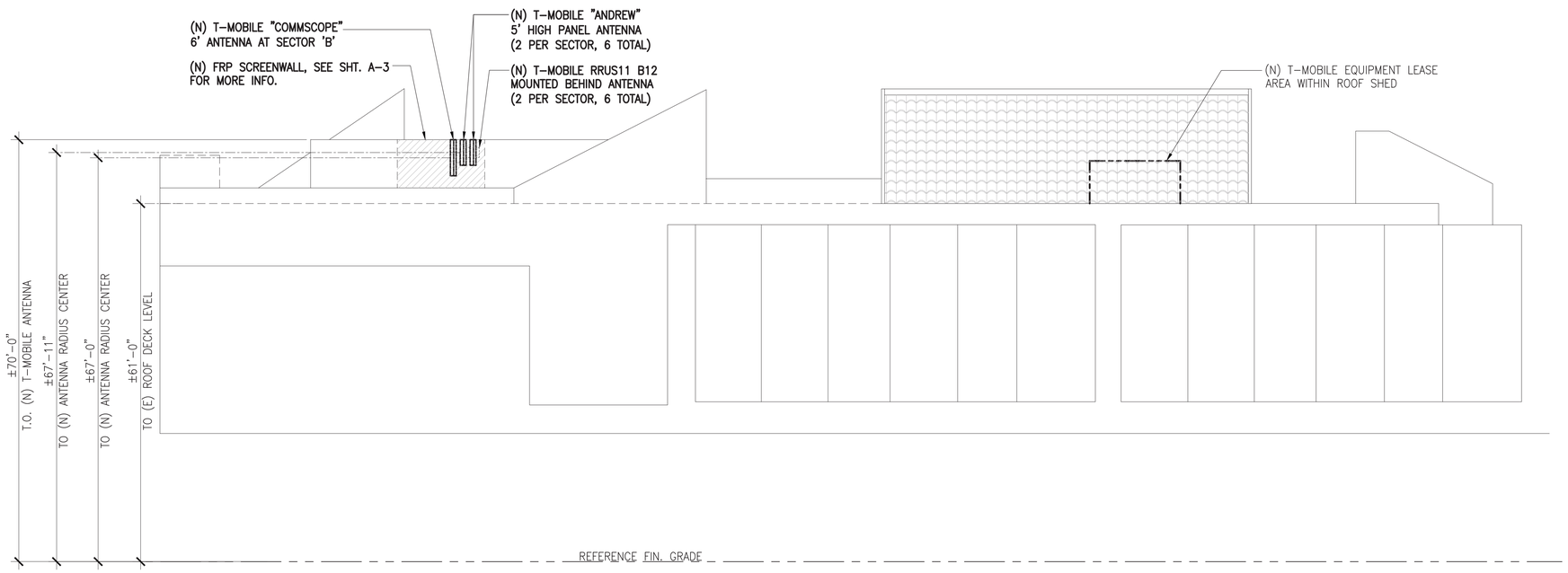

EAST ELEVATION

SCALE: 3/32"=1'-0" (0 2' 6' 10' 20')

1

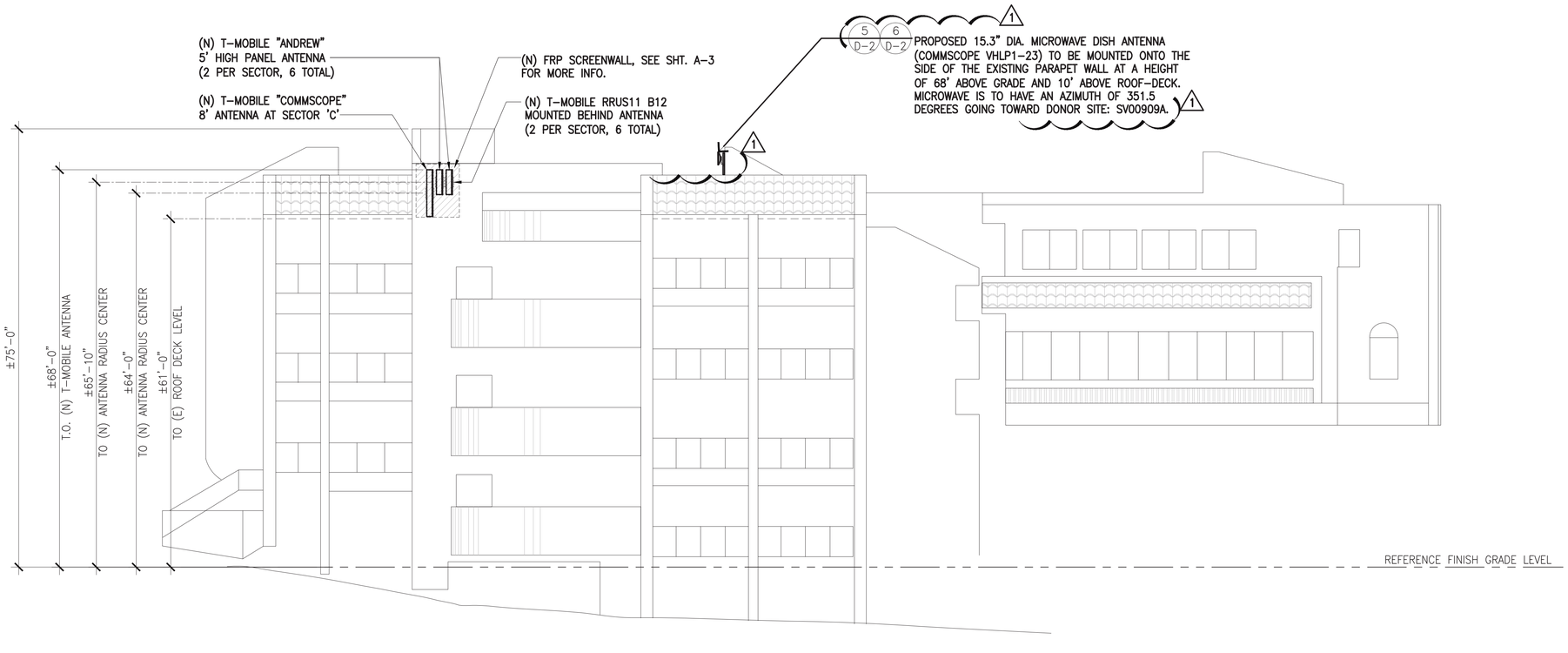

WEST ELEVATION

SCALE: 3/32"=1'-0" (0 2' 6' 10' 20')

2

T-Mobile
Stick Together

4100 GUARDIAN ST., SUITE 101
SIMI VALLEY, CA 93063

PROJECT INFORMATION:

TM001 PEPPERDINE KECK BUILDING
SV00586E

24255 PACIFIC COAST HWY.
MALIBU, CA 90263
COUNTY OF LOS ANGELES

CURRENT ISSUE DATE:

11/13/15

ISSUED FOR:

CONSTRUCTION

REV.:	DATE:	DESCRIPTION:	BY:
A	9/17/15	90% CD ISSUED FOR REVIEW	PAD
B	11/06/15	90% CD REVISED PER CHANGE IN S.O.W.	RAS
1	11/13/15	100% CD REVISED PER D.R.M. AND B&S PLAN CHECK COMMENTS	RAS

PLANS PREPARED BY:

Synergy
Development Services, INC.
7543 Woodley Ave #201 Van Nuys, CA 91406
Office: (818) 840-0808 Fax: (818) 688-8066

CONSULTANT:

Synergy
Development Services, INC.
7543 Woodley Ave #201 Van Nuys, CA 91406
Office: (818) 840-0808 Fax: (818) 688-8066

DRAWN BY:	CHK.:	APV.:
RAS	SYNERGY	AB

LICENSURE:

REGISTERED PROFESSIONAL ENGINEER
ADAM BRONNENKANT
C74190
EXP.6/30/17
CIVIL
STATE OF CALIFORNIA

SHEET TITLE:

ELEVATIONS

SHEET NUMBER: A-5

REVISION: 1

SV00586E

Nov 12, 2015 - 9:53am

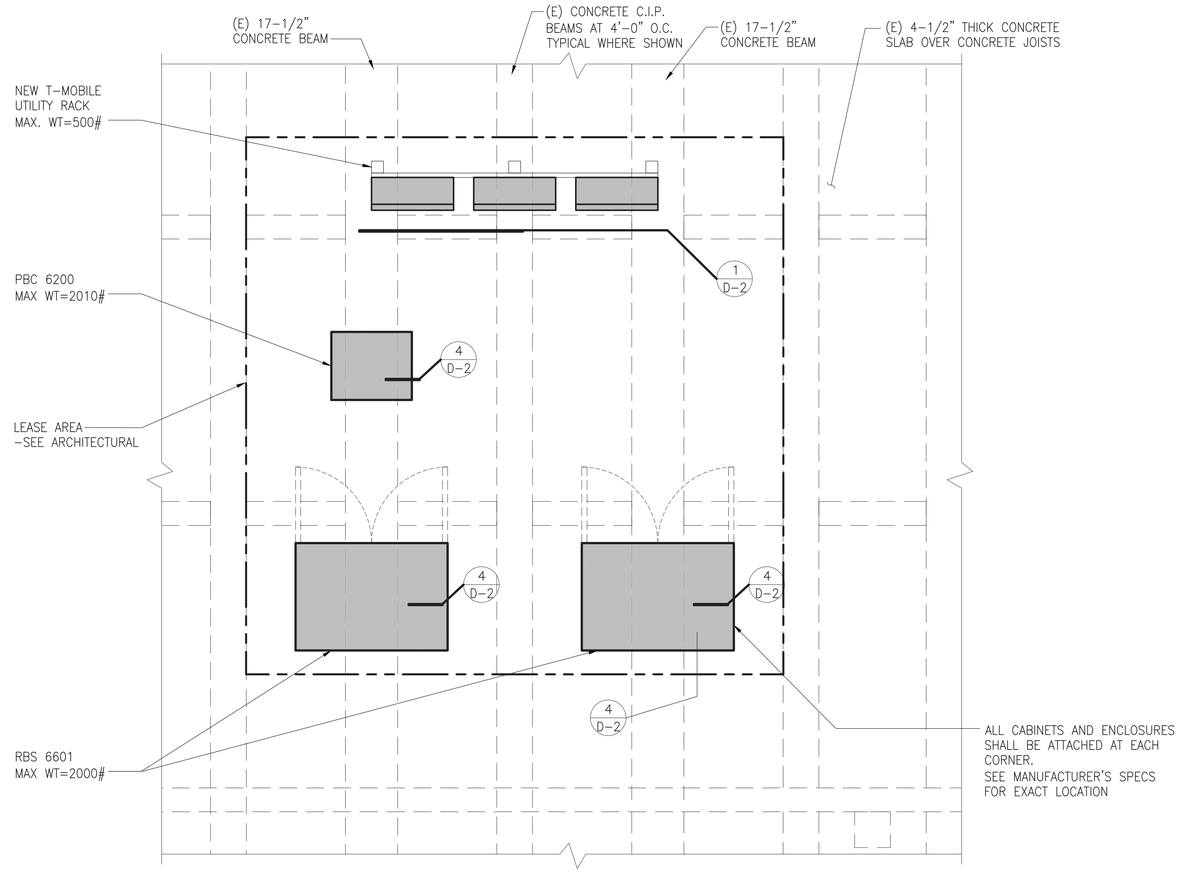

PARTIAL (EXISTING) ROOF FRAMING PLAN

SCALE: 1/2"=1'-0"

Nov 12, 2015 – 9:53am

T-Mobile
Stick Together

4100 GUARDIAN ST., SUITE 101
SIMI VALLEY, CA 93063

PROJECT INFORMATION:

TM001 PEPPERDINE KECK BUILDING
SV00586E

24255 PACIFIC COAST HWY.
MALIBU, CA 90263
COUNTY OF LOS ANGELES

CURRENT ISSUE DATE:

11/13/15

ISSUED FOR:

CONSTRUCTION

REV.:	DATE:	DESCRIPTION:	BY:
A	9/17/15	90% CD ISSUED FOR REVIEW	PAD
B	11/06/15	90% CD REVISED PER CHANGE IN S.O.W.	RAS
1	11/13/15	100% CD REVISED PER D.R.M. AND B&S PLAN CHECK COMMENTS	RAS

PLANS PREPARED BY:

Synergy
Development Services, INC.
7543 Woodley Ave #201 Van Nuys, CA 91406
Office: (818) 840-0808 Fax: (818) 688-8066

CONSULTANT:

Synergy
Development Services, INC.
7543 Woodley Ave #201 Van Nuys, CA 91406
Office: (818) 840-0808 Fax: (818) 688-8066

DRAWN BY:	CHK.:	APV.:
RAS	SYNERGY	AB

LICENSURE:

REGISTERED PROFESSIONAL ENGINEER
ADAM BRONNENCAYT
C74190
EXP.6/30/17
CIVIL
STATE OF CALIFORNIA

SHEET TITLE:

PARTIAL (EXISTING)
ROOF FRAMING PLAN

SHEET NUMBER: A-6

REVISION: 1

SV00586E

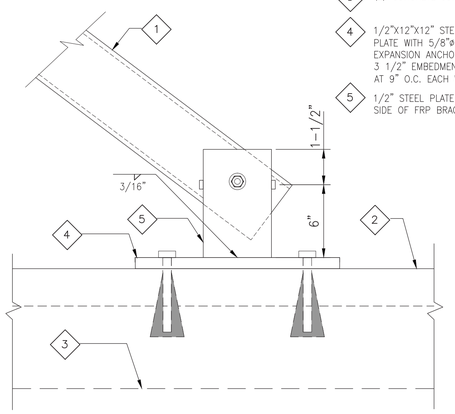

1. FRP BRACE PER PLANS
2. (E) CONCRETE SLAB
3. (E) CONCRETE JOIST
4. 1/2"X12"X12" STEEL BASE PLATE WITH 5/8"ø EXPANSION ANCHORS WITH 3 1/2" EMBEDMENT (MIN.) AT 9" O.C. EACH WAY
5. 1/2" STEEL PLATE EACH SIDE OF FRP BRACE

FRP BRACE DETAIL 8

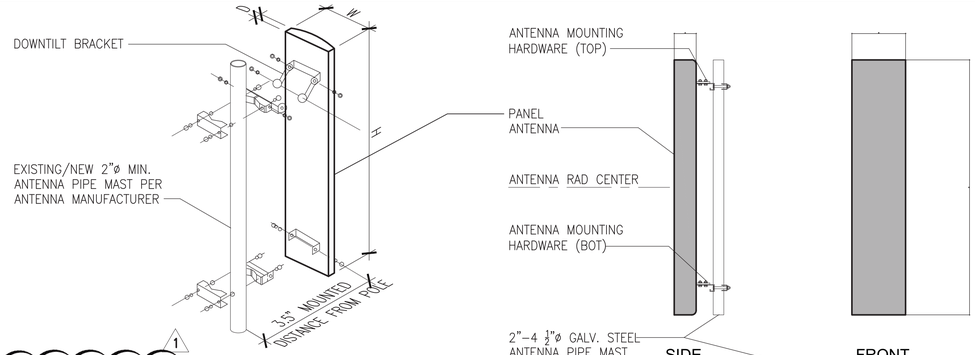

COMMSCOPE/ANDREW	HEIGHT	WIDTH	DEPTH	WEIGHT
TMBXX-6516-R2M	59.5"	12.0"	6.5"	34.6 lbs
SBNHH-1D65B	72.0"	11.85"	7.1"	50.7 lbs

NOTE:
SEE ANTENNA MANUFACTURER SPECS. FOR COMPLETE ANTENNA AND BRACKET SPECIFICATIONS.

6 ANTENNA MOUNTING DETAIL

SCALE: 3/4"=1'-0" 1

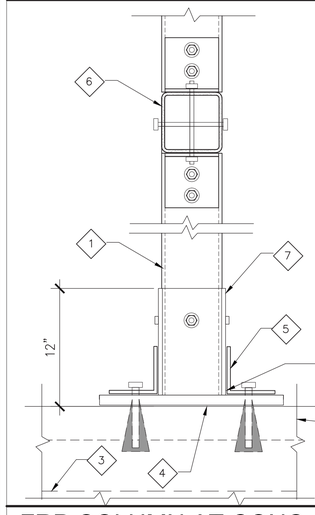

1. COLUMN PER PLANS
2. (E) CONCRETE SLAB
3. (E) CONCRETE JOIST
4. 1/2"X12"X12" STEEL BASE PLATE WITH 5/8"ø EXPANSION ANCHORS WITH 3 1/2" EMBEDMENT (MIN.) AT 9" O.C. EACH WAY
5. L 4X4X1/4" EACH SIDE
6. FRP BEAM 4"X4"X1/4" WITH ATTACHEMENT TO CONTINUOUS COLUMN PER TYPICAL FRP BEAM AT FRP COLUMN DETAIL
7. 1/ 4" STEEL PLATE WITH 1-1" DIA. STEEL THRU BOLT

FRP COLUMN AT CONC. ROOF DECK 9

1. (E) CONCRETE WALL
2. BEAM PER PLAN
3. FRP ANGLE EACH SIDE PER TYPICAL FRP BEAM AT FRP BEAM OR COLUMN.
4. FRP PLATE 4X4X3/8 X 8" LONG EACH SIDE WITH 2-1" DIA. FIBER BOLTS
5. COLUMN PER PLANS
6. C12X20.7 INSIDE FACE AND 1/4" STEEL PLATE OUTSIDE FACE WITH 2-1/2" DIA. THRU BOLTS

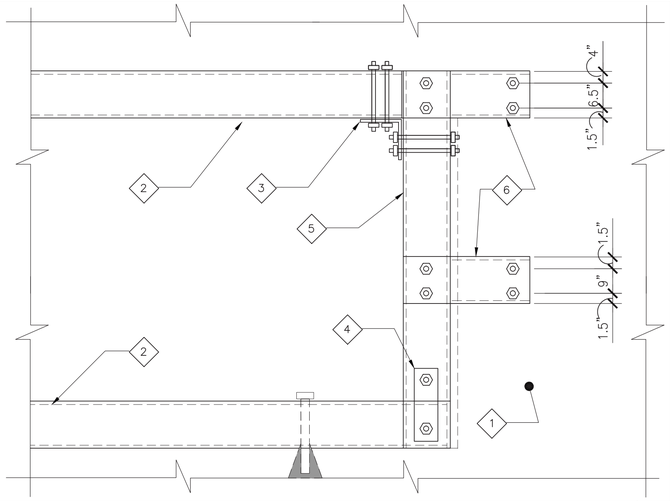

FRP SCREEN WALL DETAIL

SCALE: N.T.S. 4

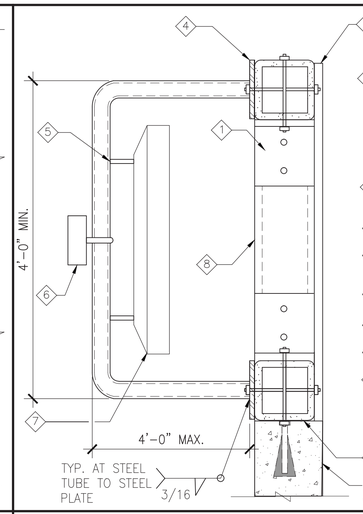

1. FRP ANGLE EACH SIDE PER TYPICAL FRP BEAM AT FRP BEAM OR COLUMN. O.K. TO SHRINK ANGLE TO 4X4X1/4X4" LONG MINIMUM
2. FRP TUBE 4X4X1/4 TOP AND BOTTOM
3. FRP SCREEN WALL
4. 1/4"X3" WIDE MINIMUM STEEL PLATE
5. ANTENNA MOUNTING BRACKET PER MFR.
6. RRU AS OCCURS
7. ANTENNA AS OCCURS
8. FRP COLUMN PER PLANS OR AS OCCURS AT EXISTING

ANTENNA SUPPORT (PIPE & STEEL PLATE)

SCALE: N.T.S. 2

DESIGN CRITERIA 10

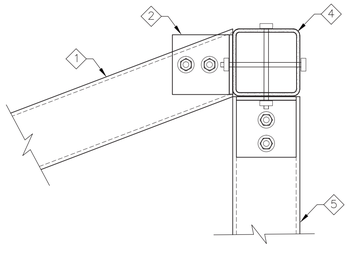

1. FRP BRACE PER PLANS
2. FRP ANGLE PER TYPICAL DETAILS 6 SUB 1"ø FRP BOLTS
3. FRP ANGLE PER TYPICAL DETAILS
4. FRP TUBE 4X4X1/4
5. FRP COLUMN 4X4X1/4

DIAGONAL BRACE AT BEAM 7

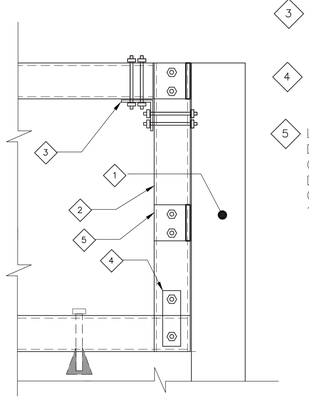

1. (E) CONCRETE WALL
2. BEAM/COLUMN PER PLAN
3. FRP ANGLE EACH SIDE PER TYPICAL FRP BEAM AT FRP BEAM OR COLUMN.
4. FRP PLATE 4X4X3/8 X 8" LONG EACH SIDE WITH 2-1" DIA. FIBER BOLTS
5. L6X6X1/4" WITH 2-1/2" DIA. STEEL BOLTS AT FRP COLUMN AND 2-1/2" DIA. EXPANSION BOLTS AT CONCRETE WALL WITH 3 1/2" EMBEDMENT.

FRP SCREEN WALL DETAIL 5

ERICSSON RRUS11 B12
DIMENSION, HxWxD : 19.7" x 17.0" x 7.2"
POWER CONSUMPTION: 2 x 40 WATTS
TOTAL WEIGHT: 50 lbs
TEMPERATURE: -40 TO 55° C
MOUNTING HARDWARE: SXK 125 0245/1 4.8 lbs

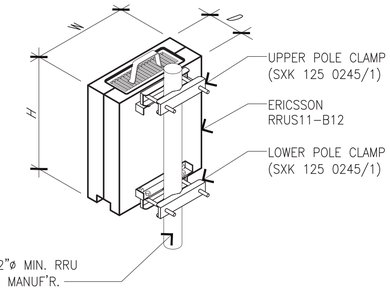

RRU11-B12 MOUNTING DETAIL

SCALE: N.T.S. 1

T-Mobile
Stick Together

4100 GUARDIAN ST., SUITE 101
SIMI VALLEY, CA 93063

PROJECT INFORMATION:

TM001 PEPPERDINE KECK BUILDING
SV00586E

24255 PACIFIC COAST HWY.
MALIBU, CA 90263
COUNTY OF LOS ANGELES

CURRENT ISSUE DATE:
11/13/15

ISSUED FOR:
CONSTRUCTION

REV.:	DATE:	DESCRIPTION:	BY:
A	9/17/15	90% CD ISSUED FOR REVIEW	PAD
B	11/06/15	90% CD REVISED PER CHANGE IN S.O.W.	RAS
1	11/13/15	100% CD REVISED PER D.R.M. AND B&S PLAN CHECK COMMENTS	RAS

PLANS PREPARED BY:

Synergy Development Services, INC.
7543 Woodley Ave #201 Van Nuys, CA 91406
Office: (818) 840-0808 Fax: (818) 688-8066

CONSULTANT:

Synergy Development Services, INC.
7543 Woodley Ave #201 Van Nuys, CA 91406
Office: (818) 840-0808 Fax: (818) 688-8066

DRAWN BY:	CHK.:	APV.:
RAS	SYNERGY	AB

LICENSURE:

REGISTERED PROFESSIONAL ENGINEER ADAM BRONNEKANT C74190 EXP.6/30/17 CIVIL STATE OF CALIFORNIA

SHEET TITLE:
DETAILS

SHEET NUMBER: D-1 REVISION: 1

SV00586E

Nov 12, 2015 - 9:53am

Product Specifications

VHLP1-23

Antenna Dimensions And Mounting Information

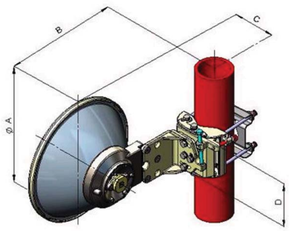

Dimensions in Inches (mm)				
Antenna Size, ft (m)	A	B	C	D
1(0.3)	15.3 (388)	14.1 (358)	8.6 (219)	5.9 (150)

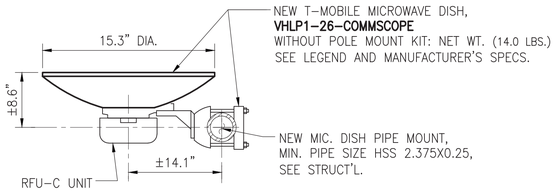

PLAN VIEW

NEW MICROWAVE DISH LEGEND		
	MICROWAVE - DONOR	MICROWAVE - RECIPIENT
AZIMUTH	351.5°	N/A
MIC. DISH MODEL	VHLP1-23	
MIC. DISH COUNT	1	N/A
MIC. DISH CENTERLINE	68'-0"	N/A
COAX TYPE/SIZE	1/2"ø	N/A
NUMBER OF COAX	1	N/A
COAX LENGTH	±220 FT.	N/A

MICROWAVE DISH ANTENNA SPECS. AND SCHEDULE

SCALE: NTS | 6

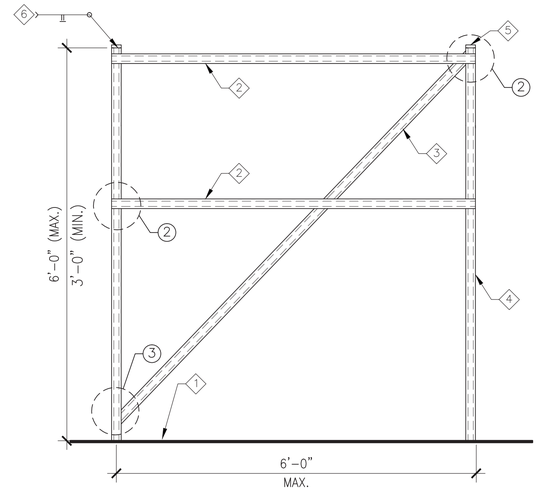

1. CONCRETE SLAB OR FINISH GRADE AS OCCURS
2. P1000 UNISTRUT AS OCCURS FOR EQUIPMENT SUPPORT
3. 1"ø STD SCH40 STEEL PIPE BRACE
4. 3-1/2" STEEL PIPE
5. 1/4" STEEL CAP PLATE
6. TYPICAL CAP TO PIPE

H-FRAME ELEVATION

SCALE: NTS | 1

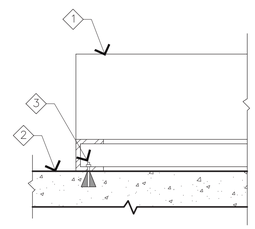

1. EQUIPMENT AND EQUIPMENT CURB PER MANUFACTURER
2. (E) CONCRETE SLAB
3. 5/8"ø HILTI KWIK BOLT 2 WITH 3-1/2" EMBEDMENT INTO (E) CONCRETE SLAB AT EACH CORNER. SEE GSN FOR ADDITIONAL INFORMATION. CONTRACTOR TO COORDINATE WITH MANUFACTURER'S SPECS FOR EXACT LOCATION.

(N) EQUIPMENT ANCHORAGE @ (E) CONCRETE SLAB

SCALE: NONE | 4

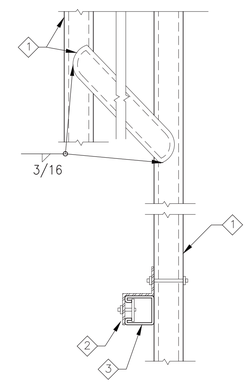

1. STEEL PIPE
2. P1045 Z-BRACKET WITH 1/2"ø THRU BOLT AT STEEL PIPE AND P1010 CHANNEL NUT WITH SPRING AT UNISTRUT
3. P1000 UNISTRUT

STEEL TO STEEL ATTACHMENT

SCALE: NTS | 2

NOT USED | 8

NOT USED | 7

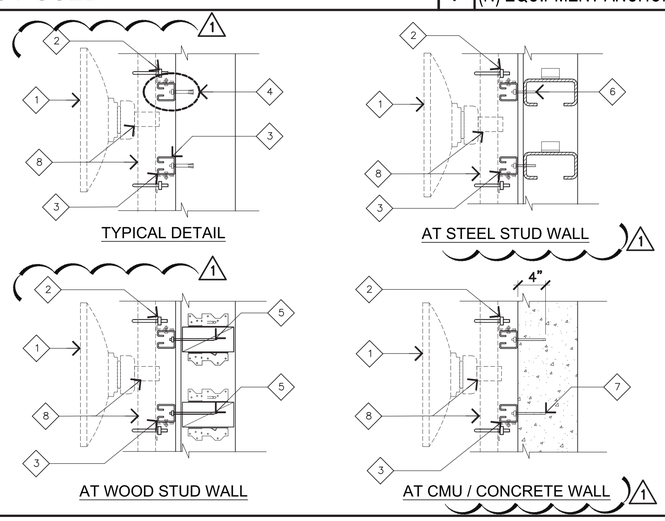

1. MICROWAVE DISH ANTENNA PER PLAN (ALSO SEE SPECS.)
2. 1/2" DIA. U-BOLT (TOP & BOTTOM) FOR ANTENNA PIPE MOUNTING
3. P1000 UNISTRUT, ±18" LENGTH AT TOP & BOTTOM
4. FOR BOLTS AND ATTACHMENT REFER TO WALL TYPES ON DETAILS AS SHOWN
5. (2) 3/8" DIA. X 3-1/2" LONG LAG SCREWS TOP AND BOTTOM AT 8" O.C. IN 8X STUD DEPTH WOOD BLOCKING WITH SIMPSON A34 EACH END, TOP AND BOTTOM
6. (2) 1/4" DIA. SCREWS TOP AND BOTTOM AT 8" O.C. IN 16 GA. STEEL STUD BLOCKING WITH ANGLE CLIP, TOP AND BOTTOM.
7. (2) 3/8" DIA. SIMPSON STRONG BOLT 2 @ 8" O.C. TOP AND BOTTOM
8. MICROWAVE DISH ANTENNA ATTACHMENT TO PIPE MOUNT PER MANUFACTURER

ANTENNA PIPE MOUNT ATTACHMENT TO (E) WALL (FOR MICROWAVE DISH)

SCALE: N.T.S. | 5

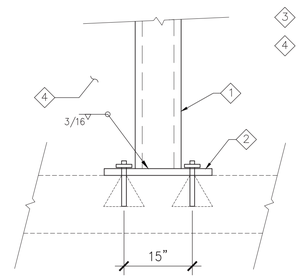

1. STEEL COLUMN
2. 5/8"X18"X12" STEEL BASEPLATE WITH (4) 5/8"øX4" EMBEDMENT EXP. ANCHORS AT 6" O.C. WIDTHWISE AND 15" O.C. LONGWISE. LONG DIRECTION OF BASEPLATE SHALL BE ORIENTED PERPENDICULAR TO THE DIRECTION OF THE PIPE FRAME
3. (E) CONCRETE SLAB
4. SIDE OF EQUIPMENT

STEEL PIPE @ CONCRETE ROOF DECK

SCALE: N.T.S. | 3

NOT USED | 9

Nov 12, 2015 – 9:54am

T-Mobile
Stick Together
4100 GUARDIAN ST., SUITE 101
SIMI VALLEY, CA 93063

PROJECT INFORMATION:

TM001 PEPPERDINE KECK BUILDING
SV00586E

24255 PACIFIC COAST HWY.
MALIBU, CA 90263
COUNTY OF LOS ANGELES

CURRENT ISSUE DATE:

11/13/15

ISSUED FOR:

CONSTRUCTION

REV.:	DATE:	DESCRIPTION:	BY:
A	9/17/15	90% CD ISSUED FOR REVIEW	PAD
B	11/06/15	90% CD REVISED PER CHANGE IN S.O.W.	RAS
1	11/13/15	100% CD REVISED PER D.R.M. AND B&S PLAN CHECK COMMENTS	RAS

PLANS PREPARED BY:

Synergy
Development Services, INC.
7543 Woodley Ave #201 Van Nuys, CA 91406
Office: (818) 840-0808 Fax: (818) 688-8066

CONSULTANT:

Synergy
Development Services, INC.
7543 Woodley Ave #201 Van Nuys, CA 91406
Office: (818) 840-0808 Fax: (818) 688-8066

DRAWN BY:	CHK.:	APV.:
RAS	SYNERGY	AB

LICENSURE:

REGISTERED PROFESSIONAL ENGINEER
ADAM BRONNENGRUT
C74190
EXP. 6/30/17
CIVIL
STATE OF CALIFORNIA

SHEET TITLE:

DETAILS
& MICROWAVE DISH
ANTENNA SCHEDULE

SHEET NUMBER: D-2 | REVISION: 1

SV00586E

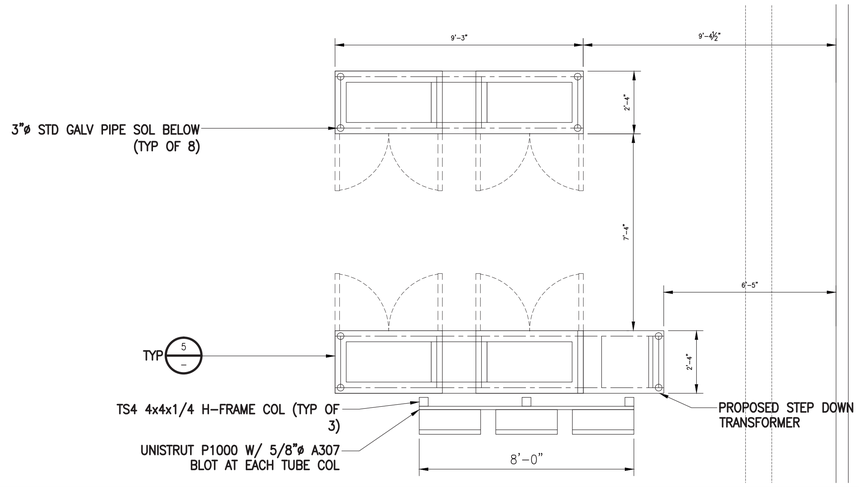

ERICSSON RBS 6102 CABINET

SCALE: N.T.S. | 1

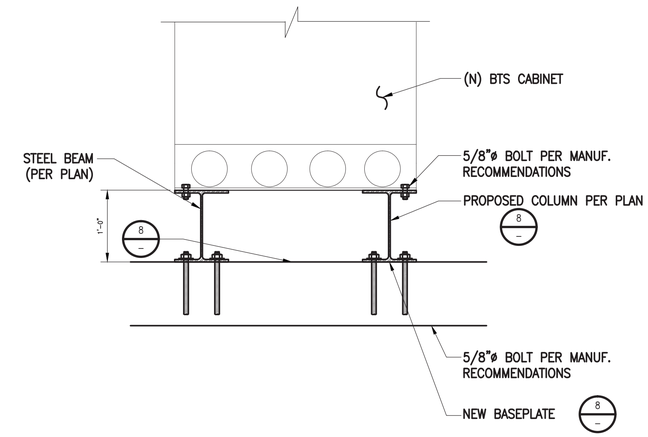

CABINET MOUNTING DETAIL

SCALE: N.T.S. | 2

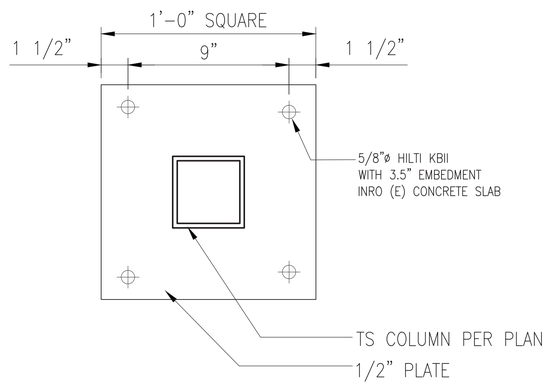

BASEPLATE DETAIL

3

NOT USED

4

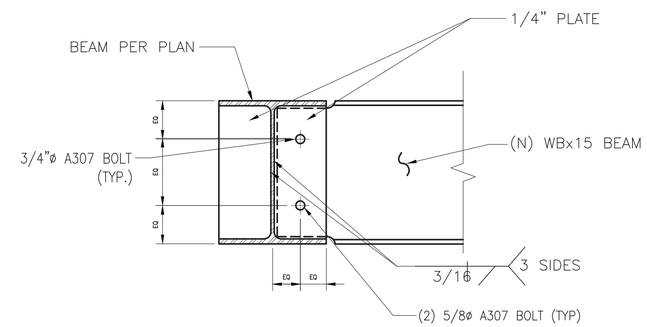

UTILITY CABINET MOUNTING DETAIL

5

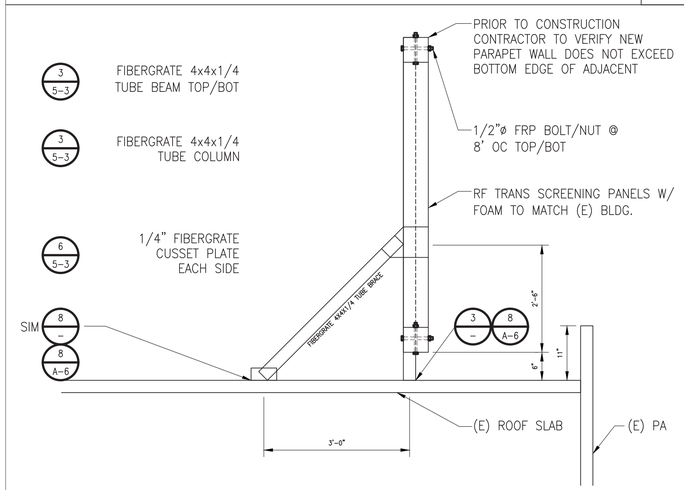

SCREEN WALL SECTION

6

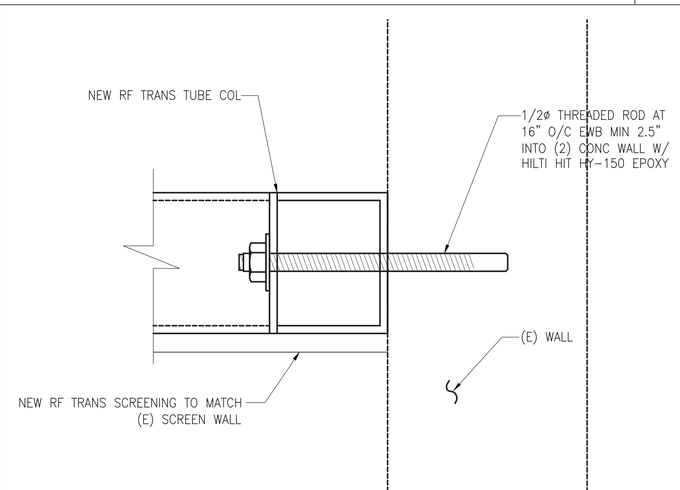

DETAIL

7

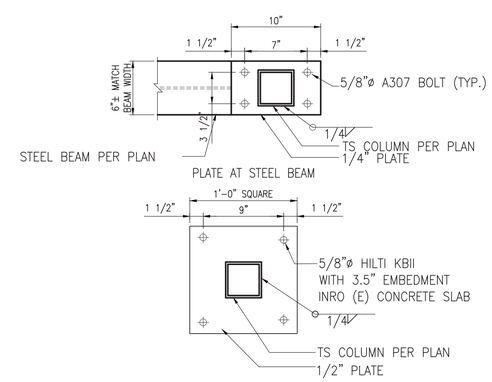

DETAIL

8

Nov 12, 2015 – 9:54am

T-Mobile
Stick Together
4100 GUARDIAN ST., SUITE 101
SIMI VALLEY, CA 93063

PROJECT INFORMATION:

TM001 PEPPERDINE KECK BUILDING
SV00586E

24255 PACIFIC COAST HWY.
MALIBU, CA 90263
COUNTY OF LOS ANGELES

CURRENT ISSUE DATE:

11/13/15

ISSUED FOR:

CONSTRUCTION

REV.:	DATE:	DESCRIPTION:	BY:
A	9/17/15	90% CD ISSUED FOR REVIEW	PAD
B	11/06/15	90% CD REVISED PER CHANGE IN S.O.W.	RAS
1	11/13/15	100% CD REVISED PER D.R.M. AND B&S PLAN CHECK COMMENTS	RAS

PLANS PREPARED BY:

Synergy
Development Services, INC.
7543 Woodley Ave #201 Van Nuys, CA 91406
Office: (818) 840-0808 Fax: (818) 688-8066

CONSULTANT:

Synergy
Development Services, INC.
7543 Woodley Ave #201 Van Nuys, CA 91406
Office: (818) 840-0808 Fax: (818) 688-8066

DRAWN BY:	CHK.:	APV.:
RAS	SYNERGY	AB

LICENSURE:

REGISTERED PROFESSIONAL ENGINEER ADAM BRONNENCANT C74190 EXP.6/30/17 CIVIL STATE OF CALIFORNIA

SHEET TITLE:

DETAILS

SHEET NUMBER: S-1

REVISION: 1

SV00586E

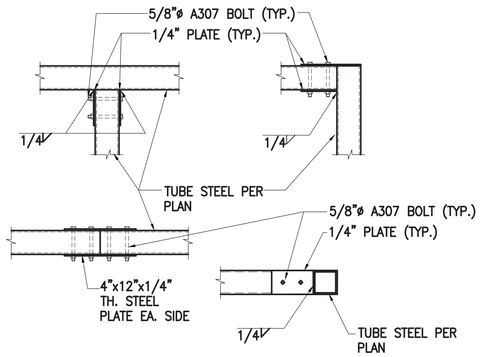

RF TRANS TUBE CONNECTION DETAILS

SCALE: N.T.S. | 1

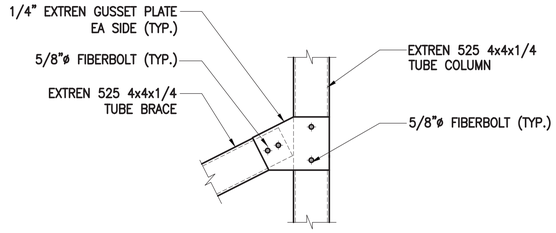

RF TRANS GUSSET PLATE DETAIL

SCALE: N.T.S. | 2

NOT USED

SCALE: N.T.S. | 3

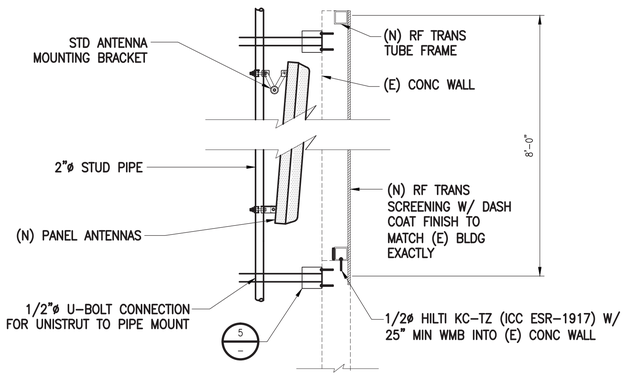

ANTENNA MOUNTING SECTION

SCALE: N.T.S. | 4

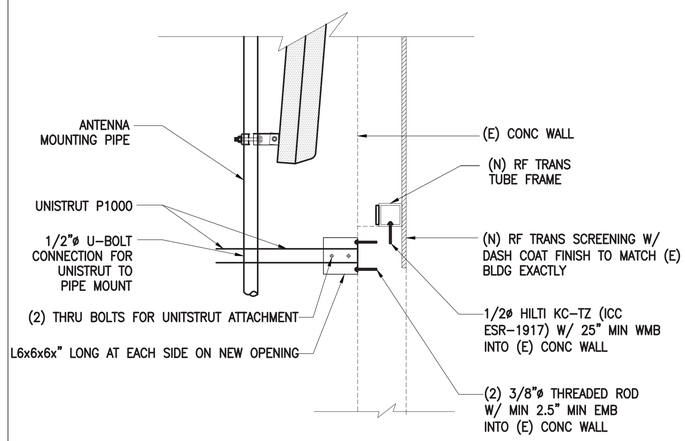

DETAIL

SCALE: N.T.S. | 5

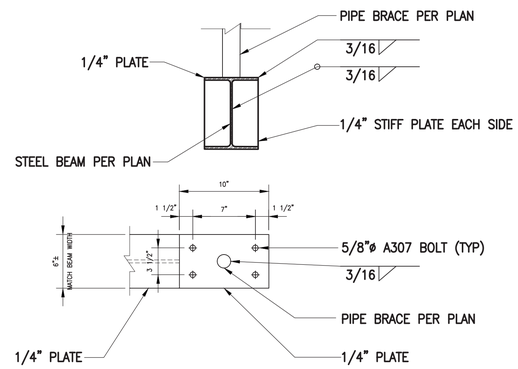

DETAIL

SCALE: N.T.S. | 6

NOT USED

SCALE: N.T.S. | 7

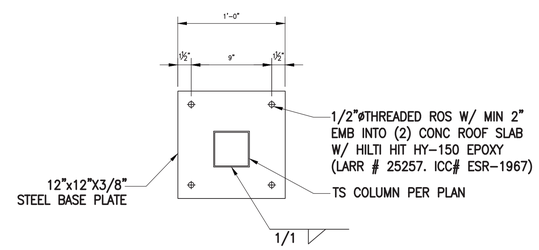

TYPICAL PITCH POCKET DETAIL

SCALE: N.T.S. | 8

BASEPLATE DETAIL

SCALE: N.T.S. | 9

Nov 12, 2015 – 9:54am

T-Mobile
Stick Together

4100 GUARDIAN ST., SUITE 101
SIMI VALLEY, CA 93063

PROJECT INFORMATION:

TM001 PEPPERDINE KECK BUILDING
SV00586E

24255 PACIFIC COAST HWY.
MALIBU, CA 90263
COUNTY OF LOS ANGELES

CURRENT ISSUE DATE:

11/13/15

ISSUED FOR:

CONSTRUCTION

REV.:	DATE:	DESCRIPTION:	BY:
A	9/17/15	90% CD ISSUED FOR REVIEW	PAD
B	11/06/15	90% CD REVISED PER CHANGE IN S.O.W.	RAS
1	11/13/15	100% CD REVISED PER D.R.M. AND B&S PLAN CHECK COMMENTS	RAS

PLANS PREPARED BY:

Synergy
Development Services, INC.
7543 Woodley Ave #201 Van Nuys, CA 91406
Office: (818) 840-0808 Fax: (818) 688-8066

CONSULTANT:

Synergy
Development Services, INC.
7543 Woodley Ave #201 Van Nuys, CA 91406
Office: (818) 840-0808 Fax: (818) 688-8066

DRAWN BY:	CHK.:	APV.:
RAS	SYNERGY	AB

LICENSURE:

REGISTERED PROFESSIONAL ENGINEER
ADAM BRONNENKANT
C74190
EXP:6/30/17
CIVIL
STATE OF CALIFORNIA

SHEET TITLE:

DETAILS

SHEET NUMBER: S-2

REVISION: 1

SV00586E

1. THE ENTIRE INSTALLATION SHALL CONFORM TO THE REQUIREMENTS OF THE LATEST EDITION ACCEPTABLE BY THE JUSRISDICTION OF THE NATIONAL ELECTRICAL CODE, CALIFORNIA ELECTRICAL CODE, STATE FIRE MARSHALL REGULATIONS, AND ALL OTHER STATE AND LOCAL CODES, LAWS, AND ORDINANCES HAVING JURISDICTION ALBEIT NOT SHOWN ON DRAWINGS OR SHOWN OTHERWISE.

2. THE ELECTRICAL CONTRACTOR SHALL OBTAIN AND PAY FOR ALL PERMITS AND INSPECTION REQUIREMENTS.

3. ELECTRICAL CONTRACTOR SHALL VISIT JOB SITE AND VERIFY EXISTING CONDITIONS BEFORE BIDDING AND SHALL INCLUDE IN HIS BID THE NECESSARY COSTS TO CONSTRUCT THIS PROJECT IN ACCORDANCE WITH INTENT OF THE ELECTRICAL DRAWINGS, SPECIFICATIONS, SERVING UTILITY COMPANY'S REQUIREMENTS AND ALL APPLICABLE CODES. SUBMITTAL OF BID INDICATES CONTRACTOR IS COGNIZANT OF ALL JOB SITE CONDITIONS AND WORK TO BE PERFORMED UNDER THIS CONTRACT BEFORE SUBMITTING BID. CONTRACTOR SHALL VERIFY EXISTING SITE CONDITIONS, POWER AND TELEPHONE SERVICE REQUIREMENTS WITH UTILITY SERVICE PLANNER AND THE EXACT SERVING UTILITY POINTS OF CONNECTION AND PROVIDE ALL SERVICE RELATED EQUIPMENT AND INSTALLATION IN BID. UTILITY SERVICE REQUIREMENTS SHOWN ON THE DRAWINGS ARE BASED ON PRELIMINARY SITE VISIT AND INFORMATION AVAILABLE AT THIS TIME OF VISIT AND ARE NOT GUARANTEED BY ENGINEER OR SERVING UTILITY COMPANY. REFER TO ARCHITECTURAL DRAWINGS AND VISIT SITE PRIOR TO BID TO REVIEW EXISTING TOPOGRAPHY MAPS, LANDSCAPING AND CONSTRUCTION TO BECOME FAMILIAR WITH SLOPE CONDITIONS AND EXISTING CONSTRUCTION AND LANDSCAPING. ADJUST CONDUIT ROUTING INDICATED TO AVOID DISTURBING EXISTING CONDITION WHERE POSSIBLE. SAWCUT EXISTING SURFACE WHERE REQUIRED FOR CONDUIT AND STRUCTURE INSTALLATION AND PATCH TO MATCH EXISTING. REPAIR OR REPLACE ALL SOD, LANDSCAPING, SPRINKLER SYSTEMS, CONDUITS AND WIRING, PIPING ETC. ALTERED BY THE ELECTRICAL WORK TO MATCH EXISTING AND TO MAKE SYSTEMS OPERABLE.

4. THE INSTALLATION SHALL CONFORM TO THE REQUIREMENTS OF NECA MANUAL OF GOOD WORKMANSHIP" (STANDARD OF INSTALLATION).

5. ELECTRICAL CONTRACTOR SHALL PROVIDE ALL LABOR, MATERIALS, INSURANCE, EQUIPMENT, INSTALLATION, CONSTRUCTION TOOLS, TRANSPORTATION, INCLUDING BUT NOT LIMITED TO COMPLETE ELECTRICAL SYSTEMS, POWER AND LIGHTING, TELEPHONE CONDUIT SYSTEM, SIGNAL SYSTEMS, PANELBOARDS(S), CONTROL WIRING, GROUNDING, CONDUIT ONLY SYSTEMS ETC., FOR A COMPLETE AND PROPERLY OPERATING SYSTEM, ENERGIZED THROUGHOUT AND AS INDICATED ON THE DRAWINGS, AS SPECIFIED HEREIN AND/OR AS OTHERWISE REQUIRED.

6. ALL MATERIALS AND EQUIPMENT SHALL BE NEW AND IN PERFECT CONDITION WHEN INSTALLED AND SHALL BE OF THE BEST GRADE AND OF THE SAME MANUFACTURER THROUGHOUT FOR EACH CLASS OR GROUP OF EQUIPMENT. MATERIALS SHALL BE LISTED AND APPROVED BY UNDERWRITER'S LABORATORY AND SHALL BEAR THE INSPECTION LABEL UL WHERE SUBJECT TO SUCH APPROVAL. MATERIALS SHALL MEET WITH THE APPROVAL OF THE DIVISION OF INDUSTRIAL SAFETY AND ALL GOVERNING BODIES HAVING JURISDICTION. MATERIALS SHALL BE MANUFACTURED IN ACCORDANCE WITH APPLICABLE STANDARDS ESTABLISHED BY ANSI, NEMA, AND NBFU.

7. IT SHALL BE THE CONTRACTOR'S RESPONSIBILITY TO VERIFY EXISTING DIMENSIONS AND CONDITIONS. HE SHALL ISSUE A WRITTEN NOTICE OF ALL FINDINGS TO THE ENGINEER LISTING ALL MALFUNCTIONS, FAULTY EQUIPMENT AND DISCREPANCIES.

8. ALL WIRING SHALL BE IN METALLIC CONDUIT. RIGID GALVANIZED CONDUIT SHALL BE USED IN OR UNDER CONCRETE SLABS ON GRADE FIVE FEET BEFORE STUBBING UP, WHERE EXPOSED TO WEATHER, AND WHERE SUBJECT TO MECHANICAL DAMAGE. PVC SCHEDULE 80 SHALL BE USED IN OR UNDER CONCRETE OR BURIED UNDERGROUND. EMT CONDUITS SHALL BE USED INSIDE STRUCTURE OR BUILDINGDS. FLEXIBLE CONDUIT SHALL BE USED WHERE THE STRUCTURAL CONDITIONS MAKE THE USE OF RIGID CONDUIT IMPRACTICAL, AND FOR SHORT CONNECTIONS TO VIBRATING EQUIPMENT. USE NEOPRENE JACKETED FLEXIBLE CONDUIT AND FITTINGS WHERE EXPOSED TO WEATHER.

9. ALL WIRING SHALL BE CONCEALED IN FINISHED AREAS. INSTALL EXPOSED RACEWAYS PARALLEL WITH OR PERPENDICULAR TO THE LINES OF BUILDING. PAINT RACEWAYS TO MATCH MOUNTING SURFACE. PENETRATIONS OF ALL WALLS OR CEILINGS SHALL BE SEALED AND FIRE RATING MAINTAINED IN ACCORDANCE WITH UL WL1001, UL WL5001 AND ALL LOCAL AND NATIONAL CODES. DO NOT PENETRATE OR RUN CONDUITS IN AND OUT OF RATED CORRIDOR OR STAIRWELL ENCLOSURE FOR CIRCUITS NOT INTENDED TO SERVE THE EQUIPMENT WITHIN THE ENCLOSURE. CONDUIT MUST BE RUN OUTSIDE OF RATED ENCLOSURE ENVELOPS.

10. ALL CONDUCTORS SHALL BE COPPER AND RATED 600 VOLTS. ALL BRANCH CIRCUIT CONDUCTORS SHALL BE 75°C RATED COPPER TYPE "DUAL RATED THHN/THWN" #12, & #10 SOLID, #8 AND LARGER STRANDED, CONTROLS AND SIGNAL WIRING SHALL BE STRANDED.

11. OUTLET BOXES SHALL BE CAST FERROUS METAL WITH WATERTIGHT GASKETED CAST FERROUS COVERS, THREADED HUBS, AND STAINLESS STEEL SCREWS. USE CROUSE-HINDS OR APPLETON TYPE FS OR FD BOXES OR APPROVED EQUAL BY ENGINEER.

12. VERIFY EXACT LOCATIONS AND MOUNTING HEIGHTS OF ALL OUTLETS WITH CONSTRUCTION MANAGER BEFORE ROUGH-IN.

13. ELECTRICAL LAYOUT DRAWINGS ARE DIAGRAMMATIC. INSTALL THE ELECTRICAL SYSTEMS WITHOUT INTERFERING WITH STRUCTURES OR OTHER SYSTEMS.

14. ALL SURFACE-MOUNTED ELECTRICAL EQUIPMENT AND DEVICES SHALL BE PROPERLY SECURED. PROVIDE STRUCTURAL SUPPORT AS NECESSARY FOR MOUNTING EQUIPMENT.

15. CONTRACTOR SHALL LABEL THE COVER PLATE OF EACH ELECTRICAL OUTLET AND JUNCTION BOX WITH INDELIBLE INK FELT PEN. THE LABEL SHOULD SHOW PANEL AND CIRCUIT NUMBER CONTAINED IN THE BOX.

16. GROUP CONDUITS TOGETHER AND SUPPORT WITH UNISTRUT.

17. REFER TO ARCHITECTURAL DRAWINGS FOR EXACT EQUIPMENT LOCATIONS. ALL EQUIPMENT AND STUB-UP LOCATIONS SHALL BE VERIFIED WITH ENGINEER BEFORE ROUGH-IN.

18. PROVIDE SEPARATE GROUND WIRE IN ALL FLEXIBLE AND PVC CONDUITS.

19. THE ELECTRICAL CONTRACTOR SHALL MAINTAIN THE UNIFORMITY AND CONTINUITY OF THE GROUNDING SYSTEM.

20. TEST THE ENTIRE SYSTEM TO DEMONSTRATE THAT THE ELECTRICAL COMPONENTS AND SPECIAL SYSTEMS ARE COMPLETE AND FUNCTION PROPERLY, INCLUDING BUT NOT LIMITED TO INSULATION AND GROUNDING TESTS. MAKE NECESSARY CORRECTIONS AND LEAVE SYSTEMS READY FOR OPERATION.

21. COMPLETE JOB SHALL BE GUARANTEED FOR A PERIOD OF ONE (1) YEAR AFTER DATE JOB ACCEPTANCE BY OWNER. ANY WORK, MATERIAL, OR EQUIPMENT FOUND TO BE FAULTY DURING THAT PERIOD SHALL BE CORRECTED AT ONCE, UPON WRITTEN NOTIFICATION, AT THE EXPENSE OF THE ELECTRICAL CONTRACTOR.

22. AT COMPLETION OF THE JOB, THE ELECTRICAL CONTRACTOR SHALL PROVIDE THE OWNER WITH SPARE PARTS, ALL THE EQUIPMENT MANUALS, SPARE PARTS LIST AS RECOMMENDED BY THE MANUFACTURER, EQUIPMENT REPRESENTATIVE ADDRESS AND PHONE NUMBER. FURNISH ONE (1) COMPLETED SET OF "AS-BUILT" ELECTRICAL PLANS SHOWING LOCATIONS OF OUTLETS, CONDUIT RUNS, AND PANELBOARD CIRCUIT NUMBERS. ELECTRICAL CONTRACTOR SHALL PROVIDE ACCURATE DIRECTORIES IN PANELBOARD FRONTS AT COMPLETION OF BUILD-OUT. PANELBOARD DIRECTORIES SHALL INCLUDE THE EQUIPMENT SERVED AND WATTAGE.

23. REFER TO T-MOBILE'S STANDARD SPECIFICATIONS AS PART OF THIS CONSTRUCTION DOCUMENT. ANY CONFLICT BETWEEN THESE DRAWINGS, T-MOBILE'S STANDARD SPECIFICATIONS, AND APPLICABLE CODES, THE MORE STRINGENT REQUIREMENTS SHALL PREVAIL.

24. ALL WORK TO BE EXECUTED IN WORKMANLIKE MANNER AND SHALL PRESENT A NEAT MECHANICAL APPEARANCE WHEN COMPLETED.

25. THE ELECTRICAL CONTRACTOR SHALL BE RESPONSIBLE FOR ALL CUTTING AND PATCHING RELATED TO ELECTRICAL WORK, UNLESS NOTED OTHERWISE AND COORDINATED WITH THE GENERAL CONTRACTOR.

26. ALL ELECTRICAL EQUIPMENT SHALL BE BRACED OR ANCHORED TO RESIST A HORIZONTAL FORCE ACTING IN ANY DIRECTION USING THE FOLLOWING CRITERIA:

FIXED EQUIPMENT ON GRADE	33% OF OPERATING WEIGHT
FIXED EQUIPMENT ON STRUCTURE	30% OF OPERATING WEIGHT
EMERGENCY POWER & COMMUNICATION EQUIPMENT ON GRADE	30% OF OPERATING WEIGHT
EMERGENCY POWER & COMMUNICATION EQUIPMENT ON STRUCTURE	73% OF OPERATING WEIGHT

FOR FLEXIBILITY OF MOUNTED EQUIPMENT USE 2X THE ABOVE VALUES. SIMULTANEOUS VERTICAL FORCE 1/3X HORIZONTAL FORCE.

27. THE CONTRACTOR AGREE THAT, IN ACCORDANCE WITH GENERALLY CONSTRUCTION PRACTICES, THE CONTRACTOR WILL BE REQUIRED TO ASSUME SOLE AND COMPLETE RESPONSIBILITY FOR JOB SITE CONDITIONS DURING THE COURSE OF CONSTRUCTION OF THIS PROJECT AT ALL TIME. CONTRACTOR FURTHER AGREES TO DEFEND, INDEMNIFY AND HOLD OWNER AND ENGINEER HARMLESS FROM ANY AND ALL LIABILITY, REAL OR ALLEGED IN CONNECTION WITH PERFORMANCE OF WORK ON THIS PROJECT.

CONDUITS:

1. 1-2" MINIMUM DIAMETER DUCT OF APPROVED MATERIAL

WITHIN OR ON BUILDINGS-RIGID GALVANIZED STEEL (WHEN REQUIRED), OR ELECTRO-METALLIC TUBING(EMT).

IN UNDERGROUND - PVC SCHEDULE 40 OR EQUIVALENT FOR STRAIGHT SECTIONS, BENDS SHALL BE PVC SCHEDULE 80.

PULL ROPES IN ALL DUCTS (MIN. 3/8" POLY PULL ROPE) AND A MEASURING TAPE MUST BE IN PLACE TO DETERMINE "AS-BUILT" CONDUIT LENGTH; BOTH MUST BE IN ONE CONTINUOUS PIECE.

2) WITHIN BUILDINGS

ELECTRICAL LB'S AND CONDULETS ARE NOT ACCEPTABLE AS PULL BOXES.

NO 90 DEGREE TRANSITIONS AT OR IN PULL BOXES (UNLESS A 10" BENDING RADIUS CAN BE MAINTAINED)

IN-LINE PULL BOX MINIMUM DIMENSIONS = 24"L X 6"W X 6"D. 30"L X 6"W X 6"D PREFERRED.

PULL BOXES MUST BE EASILY ACCESSIBLE (TELEPHONE COMPANY WILL NOT REMOVE CEILING TILES).

VERTICAL SECTIONS OF CONDUIT WILL REQUIRE A PULL BOX EVERY 100 FEET AND APPROVED RESTRAINTS.

MAXIMUM OF 300 FEET HORIZONTAL BETWEEN PULL-BOXES.

MAXIMUM OF 2-90 DEGREE BENDS BETWEEN PULL-BOXES.

MINIMUM CONDUIT BEND RADIUS OF 10 CABLE DIAMETERS (12").

FIRE STOPPING REQUIRED WHEN OPENINGS ARE MADE IN ANY FIRE RATED BARRIER

ALL EXTERNAL CONDUIT TERMINATIONS SHALL BE WEATHER TIGHT.

3) IN UNDERGROUND CONSTRUCTION

CONDUIT LENGTH MAXIMUM OF 300 FEET BETWEEN PULL BOXES.

CONDUIT BENDS MUST HAVE A RADIUS 10 TIMES CONDUIT SIZE (20").

TRENCHING:

1. MINIMUM COVERAGE OF DUCT ON PRIVATE PROPERTY - 18" UNDER CONCRETE SURFACE OR AS SPECIFIED BY PERMITTING OWNER/AGENT.

2. MINIMUM COVERAGE OF DUCT ON PRIVATE PROPERTY = 24" UNDER DIRT SURFACE OR AS SPECIFIED BY PERMITTING OWNER/AGENT.

3. MINIMUM COVERAGE OR DUCT IN PUBLIC R/W = 30" BELOW GUTTER GRADE OR AS SPECIFIED BY PERMITTING AGENT.

4. MINIMUM 12" SEPARATION IN JOINT TRENCH BETWEEN POWER AND TELCO.

5. PULL BOXES - MINIMUM 17"W X 30"L.

6. SPLICE BOXES WILL BE SIZED BY SERVING TELEPHONE COMPANY: DETAILS WILL BE PROVIDED BY TELEPHONE COMPANY OR INTERCONNECT ENGINEER.

BONDING & GROUNDING:

1) # 6 AWG SOLID COPPER INSULATED GROUND WIRE (24" COILED IN TELCO SERVICE BOX) WITH BONDING CLAMPS IN PLACE. THE TELEPHONE GROUND MUST BE BONDED TO THE POWER GROUND. THE TELEPHONE SERVICE CABINET MUST BE BONDED TO THE TELEPHONE GROUND WIRE. ANY QUESTIONS REGARDING TELEPHONE GROUNDS SHOULD BE REFERRED TO THE INTERCONNECT ENGINEER.

SERVICE BOX

MINIMUM DIMENSIONS - 30"W X 36"H X 9"D.

3/4" PLYWOOD BACKBOARD MOUNTED IN SERVICE BOX.

36" CLEARANCE FROM GROUND LEVEL TO BOTTOM OF SERVICE BOX PREFERRED.

FULL ACCESS FROM FRONT OF BOX; MINIMUM 36" WORKING SPACE IN FRONT AND 36" IN WIDTH.

BOX MUST BE WATER RESISTANCE, NEMA 4, GALVANIZED STEEL BOX PAINTED INSIDE AND OUT AND WITH HASP AND PADLOCK.

GENERAL NOTES & SPECIFICATIONS

SCALE: N.T.S. | 3

PANEL "A"

VOLTAGE, PHASE, WIRES **120/240V, 1 PHASE, 3W**
BUS RATING: **200A BUS**
ENCLOSURE: **NEMA 3R**
MAIN: **200A UM/200A GM (INTERLOCKED)**
BRACING: **65/10KAIC, MAIN/BRANCH - SERIES**
MOUNTING: **SURFACE MOUNT**

	CKT NO.	CKT BKR AMPS	CKT BKR P	QTY LTG	QTY REC	QTY MISC	DESCRIPTION	LOAD (WATTS) LOAD	LOAD (WATTS) AØ	LOAD (WATTS) BØ	LOAD (WATTS) LOAD	DESCRIPTION	QTY MISC	QTY REC	QTY LTG	CKT BKR P	CKT BKR AMPS	CKT NO.	
CL	1	60	2			1	TVSS SURGE SUPRESSOR	100	100		3725	BTS #4	1			2	50	2	CL
CL	3						- - - - -	100		100	3725	- - - - -						4	CL
	5	15	1		1		RECEPTACLE	180	180			SPACE						6	
CL	7	50	2			1	BTS #1	3725		3725		SPACE						8	
CL	9						- - - - -	3725	3725			SPACE						10	
CL	11	50	2			1	BTS #2	3725		3725		SPACE						12	
CL	13						- - - - -	3725	4025		300	LIGHTS			2	1	20	14	CL
CL	15	50	2			1	BTS #3	3725		3725		SPACE						16	
CL	17						- - - - -	3725	3725			SPACE						18	
	19						SPACE			0		SPACE						20	
	21						SPACE		0			SPACE						22	
	23						SPACE			0		SPACE						24	
	25						SPACE		0			SPACE						26	
	27						SPACE			0		SPACE						28	
	29						SPACE		0			SPACE						30	

PHASE TOTALS (WATTS)		15480	15000
PHASE BALANCE	2%	51%	49%
TOTAL CONNECTED LOAD (WATTS)		30480	
25% OF LONG CONTINUOUS LOAD (LCL) AND LARGEST MOTOR		7500	
TOTAL LOAD (WATTS)		37980	
TOTAL LOAD (AMPS)		**158.3**	

NOTE: CL = LONG CONTINUOUS LOAD
LML = LARGEST MOTOR LOAD
UM = UTILITY MAIN CIRCUIT BREAKER
GM = GENERATOR MAIN CIRCUIT BREAKER

SEE SINGLE LINE DIAGRAM FOR WIRING DIAGRAM

SCALE: N.T.S. | 1

SINGLE LINE DIAGRAM NOTES:

1. MAXIMUM AVAILABLE FAULT: SERVING UTILITY COMPANY'S STANDARD INDICATES THAT THE MAXIMUM AVAILABLE FAULT WILL NOT EXCEED 42 KA. CONTRACTOR IS REQUIRED TO VERIFY THE ACTUAL AVAILABLE FAULT AT THE TIME OF CONSTRUCTION WITH SERVING UTILITY CO.
2. ALL CURRENT CARRING DEVICES SHALL BE U.L. LISTED AND BRACED TO WITHSTAND THE MAXIMUM AVAILABLE FAULT AT ITS TERMINALS.
3. SERIES/COMBINATION SHORT CIRCUIT RATINGS MAY BE USED WHEN OVERCURRENT DEVICE COMBINATIONS ARE LISTED UNDER U.L 67 STANDARD AND INSTALLATION SHALL COMPLY WITH NATIONAL ELECTRICAL CODE (N.E.C.) ARTICLE 110-9, 110-22 AND OTHER APPLICABLE SECTIONS.
4. APPLICABLE SERIES/COMBINATION RATED EQUIPMENT ENCLOSURES SHALL BE CLEARLY MARKED "CAUTION - SERIES RATED SYSTEM", IN COMPLIANCE WITH 2002 NEC SECTION 110-22. END-USE EQUIPMENT SHALL ALSO BE MARKED WITH THE HIGHER SERIES COMBINATION INTERRUPTING RATING AS PER 2002 NEC AND 2004 CEC.
5. POWER TO EQUIPMENT SHALL BE 200A, 240V, 1ø, 3W.
6. PROVIDE A MIN. 36" WORK CLEARANCE IN FRONT OF PANELS/ELECTRICAL EQUIPMENT.
7. ALL WIRING SHALL BE COPPER TYPE THHN/THWN RATED FOR 75° C.
8. CONDUIT REQUIREMENTS (TYP., U.N.O.): UNDERGROUND: PVC (SCHED. 40 OR 80) INDOOR: EMT (RGS IN TRAFFIC AREAS) OUTDOOR (ABOVE GRADE): RGS
9. CABINET CIRCUIT BREAKERS TO BE PROVIDED AND INSTALLED BY ELECTRICAL CONTRACTOR.
10. PROVIDE A WHITE PHONELIC SIGN WITH 3/4" RED ENGRAVED LETTERING ON PANEL "A" DOOR THAT READS "DISCONNECT GROUND TO NEUTRAL BONDING AT THE PORTABLE EMERGENCY GENERATOR PRIOR TO CONNECTION."
11. DO NOT INSTALL THE OPTIONAL NEUTRAL TO GROUND BONDING JUMPER PROVIDED WITH THE PPC. PPC SHALL NOT BE USED AS THE MAIN SERVICE EQUIPMENT (PER T-MOBILE STANDARD).
12. T-MOBILE REQUIRES A MAIN SERVICE RATED BREAKER IN ALL METER BOXES

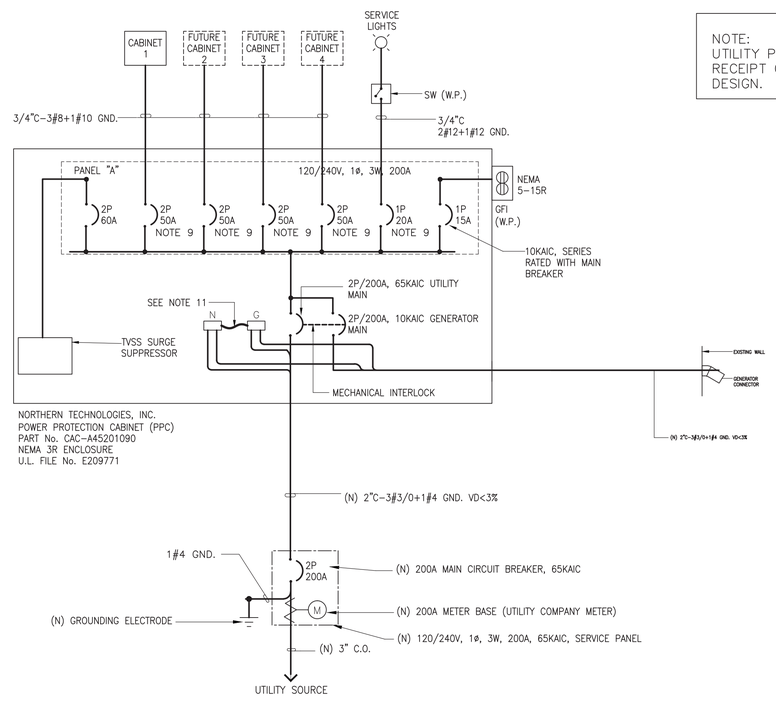

NOTE:
UTILITY PLAN IS PRELIMINARY PENDING RECEIPT OF LOCAL UTILITY PLANNER DESIGN.

SINGLE LINE DIAGRAM

SCALE: N.T.S. | 2

T-Mobile
Stick Together
4100 GUARDIAN ST., SUITE 101
SIMI VALLEY, CA 93063

PROJECT INFORMATION:
TM001 PEPPERDINE KECK BUILDING
SV00586E
24255 PACIFIC COAST HWY.
MALIBU, CA 90263
COUNTY OF LOS ANGELES

CURRENT ISSUE DATE:
11/13/15

ISSUED FOR:
CONSTRUCTION

REV.:	DATE:	DESCRIPTION:	BY:
A	9/17/15	90% CD ISSUED FOR REVIEW	PAD
B	11/06/15	90% CD REVISED PER CHANGE IN S.O.W.	RAS
1	11/13/15	100% CD REVISED PER D.R.M. AND B&S PLAN CHECK COMMENTS	RAS

PLANS PREPARED BY:
Synergy Development Services, INC.
7543 Woodley Ave #201 Van Nuys, CA 91406
Office: (818) 840-0808 Fax: (818) 688-8066

CONSULTANT:
Synergy Development Services, INC.
7543 Woodley Ave #201 Van Nuys, CA 91406
Office: (818) 840-0808 Fax: (818) 688-8066

DRAWN BY:	CHK.:	APV.:
RAS	SYNERGY	AB

LICENSURE:
REGISTERED PROFESSIONAL ENGINEER ADAM BRONNENCAYT C74190 EXP.6/30/17 CIVIL STATE OF CALIFORNIA

SHEET TITLE:
GENERAL NOTES, PANEL SCHEDULE, AND SINGLE LINE DIAGRAM

SHEET NUMBER: E-1
REVISION: 1
SV00586E

Nov 12, 2015 - 9:54am

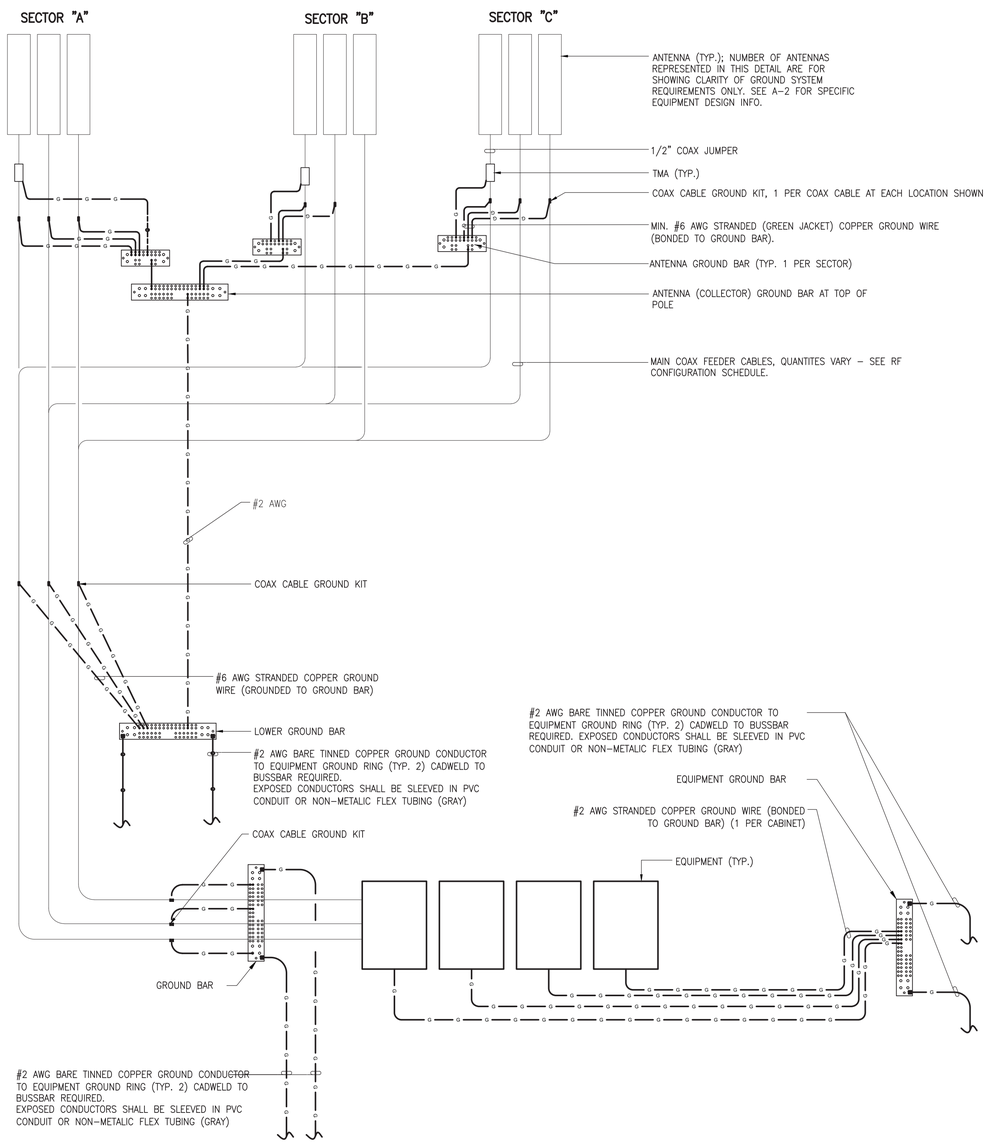

NOTES:

1. DO NOT INSTALL CABLE GROUND KIT AT A BEND AND ALWAYS DIRECT GROUND LEAD TOWARDS FINAL GROUNDING POINT.
2. GROUNDING KIT SHALL BE TYPE AND PART NUMBER AS SUPPLIED BY T-MOBILE.

COAX CABLE GROUNDING SCHEMATIC DIAGRAM | 2

1. ALL DETAILS ARE SHOWN IN GENERAL TERMS. ACTUAL GROUNDING INSTALLATION AND CONSTRUCTION MAY VARY DUE TO SITE SPECIFIC CONDITIONS.
2. GROUND ALL ANTENNA BASES, FRAMES, CABLE RUNS, AND OTHER METALLIC COMPONENTS USING #2 GROUND WIRES AND CONNECT TO SURFACE MOUNTED GROUND BUS BARS AS SHOWN. FOLLOW ANTENNA AND BTS MANUFACTURER'S PRACTICES FOR GROUNDING REQUIREMENTS. GROUND COAX SHIELD AT BOTH ENDS USING MANUFACTURERS PRACTICES. ALL UNDERGROUND WATER PIPES, METAL CONDUITS AND GROUNDS THAT ARE A PART OF THIS SYSTEM SHALL BE BONDED TOGETHER.
3. ALL GROUND CONNECTIONS SHALL BE #2 AWG U.N.O. ALL WIRES SHALL BE COPPER THHN/THWN. ALL GROUND WIRE SHALL BE SOLID TIN COATED OR STRANDED GREEN INSULATED WIRE.
4. CONTRACTOR TO VERIFY AND TEST GROUND TO SOURCE, 5 OHMS MAXIMUM. PROVIDE SUPPLEMENT GROUNDING RODS AS REQUIRED TO ACHIEVE SPECIFIED OHMS READING. GROUNDING AND OTHER OPTIONAL TESTING WILL BE WITNESSED BY THE T-MOBILE REPRESENTATIVE.
5. NOTIFY ARCHITECT/ENGINEER IF THERE ARE ANY DIFFICULTIES INSTALLING GROUNDING SYSTEM DUE TO SITE SOIL CONDITIONS.
6. BARE GROUNDING CONDUCTOR SHALL BE HARD DRAWN TINNED COPPER SIZES AS NOTED ON PLAN.
7. ALL HORIZONTALLY RUN GROUNDING CONDUCTORS SHALL BE INSTALLED MINIMUM 12" BELOW GRADE/FROST-LINE IN TRENCH, U.N.O., AND BACK FILL SHALL BE COMPACTED AS REQUIRED BY ARCHITECT.
8. ALL GROUND CONDUCTORS SHALL BE RUN AS STRAIGHT AND SHORT AS POSSIBLE, WITH A MINIMUM 12" BENDING RADIUS NOT LESS THAN 90 DEGREES.
9. ALL SUPPORT STRUCTURES, CABLE CHANNEL WAYS OR WIRE GUIDES SHALL BE BONDED TO GROUND SYSTEM AT A POINT NEAREST THE MAIN GROUNDING BUS "MGB" (OR DIRECTLY TO GROUND-RING).
10. ACCEPTABLE CONNECTIONS FOR GROUNDING SYSTEM SHALL BE:
    A. BURNDY, HY-GRADE U.L. LISTED CONNECTORS FOR INDOOR USE OR AS APPROVED BY T-MOBILE PROJECT MANAGER.
    B. CADWELD, EXOTHERMIC WELDS (WELDED CONNECTIONS).
    C. TWO -(2) HOLE TINNED COPPER COMPRESSION (LONG BARREL) FITTINGS (BUS BAR CONNECTIONS).
11. ALL CRIMPED CONNECTIONS SHALL HAVE EMBOSSED MANUFACTURER'S DIEMARK VISIBLE AT THE CRIMP (RESULTING FROM USE OF PROPER CRIMPING DEVICES).
12. PRIOR TO ANY LUG-BUSSBAR CONNECTIONS, THE BUSSBAR SHALL BE CLEANED BY USE OF "SCOTCH-BRITE' OR PLAIN STEEL WOOL AS TO REMOVE ALL SURFACE OXIDATION AND CONTAMINANTS. A COATING OF "NO-OX-ID" SHALL BE APPLIED TO THE CONNECTION SURFACES.
13. ALL CONNECTION HARDWARE SHALL BE TYPE 316 SS (NOT ATTRACTED TO MAGNETS).
14. THE GROUND RING SHALL BE INSTALLED 24" MINIMUM BEYOND ANY BUILDING DRIP LINE.
15. ELECTRICAL SERVICE EQUIPMENT GROUNDING SHALL COMPLY WITH NEC, ARTICLE 250-82 AND SHALL BOND ALL EXISTING AND NEW GROUNDING ELECTRODES. NEW GROUNDING ELECTRODE SHALL INCLUDE BUT NOT LIMITED TO GROUND RODS, GROUND RING IF SERVICE IS WITHIN THE RADIO EQUIPMENT LOCATION, BUILDING STEEL IF APPLICABLE, COLD WATER CONNECTIONS MUST BE MADE ON THE STREET SIDE OF MAIN SHUT-OFF VALVE.
16. PROVIDE #2 AWG BARE TINNED COPPER CONDUCTOR BONDING AND CONNECT TO EXISTING BUILDIG STEEL OR COLD WATER LINE.

GROUNDING NOTES | 1

T-Mobile
Stick Together
4100 GUARDIAN ST., SUITE 101
SIMI VALLEY, CA 93063

PROJECT INFORMATION:

TM001 PEPPERDINE KECK BUILDING
SV00586E

24255 PACIFIC COAST HWY.
MALIBU, CA 90263
COUNTY OF LOS ANGELES

CURRENT ISSUE DATE:

11/13/15

ISSUED FOR:

CONSTRUCTION

REV.:	DATE:	DESCRIPTION:	BY:
A	9/17/15	90% CD ISSUED FOR REVIEW	PAD
B	11/06/15	90% CD REVISED PER CHANGE IN S.O.W.	RAS
1	11/13/15	100% CD REVISED PER D.R.M. AND B&S PLAN CHECK COMMENTS	RAS

PLANS PREPARED BY:

Synergy
Development Services, INC.
7543 Woodley Ave #201 Van Nuys, CA 91406
Office: (818) 840-0808 Fax: (818) 688-8066

CONSULTANT:

Synergy
Development Services, INC.
7543 Woodley Ave #201 Van Nuys, CA 91406
Office: (818) 840-0808 Fax: (818) 688-8066

DRAWN BY:	CHK.:	APV.:
RAS	SYNERGY	AB

LICENSURE:

REGISTERED PROFESSIONAL ENGINEER
ADAM BRONNENCAYT
C74190
EXP. 6/30/17
CIVIL
STATE OF CALIFORNIA

SHEET TITLE:

COAX CABLE GROUNDING SCHEMATIC DIAGRAM

SHEET NUMBER: E-2

REVISION: 1

SV00586E

Nov 12, 2015 – 9:54am

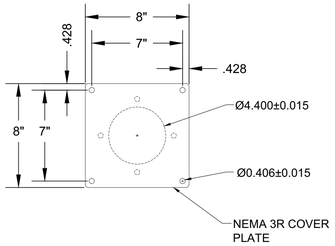

NTI/EMERSON P/N# 0600012-00
NEMA 3R, WEATHER PROOF GASKETED
SEAL COVER PLATE
T-MOBILE SAP# NOT ISSUED

NOTES:
MATERIAL: ALUMINUM, 0.125" THICK, ALLOY
FACTORY PAINTED SAME COLOR AS PPC

PPC RECEPTACLE HOLE COVER PLATE

SCALE: N.T.S. | 7

GENERATOR RECEPTACLE CONNECTIONS

APPLETON RECEPTACLE – 200A
VIEW FROM OUTSIDE (GEN. SIDE)

APPELTON AR20044RS RECEPTACLE
WIRING CONFIGURATION:
GROUND CONTACT – CHASSIS GROUND
CONTACT 1 –RED CONDUCTOR (LINE 1/HOT)
CONTACT 2 –BLACK CONDUCTOR (LINE 2/HOT)
CONTACT 3 –WHITE CONDUCTOR (LINE 3/NEUTRAL)

APPLETON RECEPTACLE – 200A
VIEW FROM INSIDE (PPC SIDE)

APPELTON AR20044RS RECEPTACLE
WIRING CONFIGURATION:
GROUND CONTACT – GREEN CONDUCTOR TO GROUND BAR
CONTACT 1 –RED CONDUCTOR (LINE 1/HOT)
CONTACT 2 –BLACK CONDUCTOR (LINE 2/HOT)
CONTACT 3 –WHITE CONDUCTOR (LINE 3/NEUTRAL)

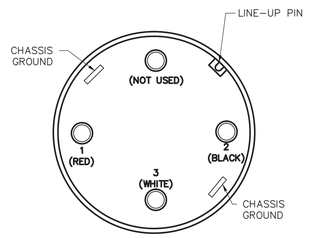

PIN CONFIGURATION MUST BE VERIFIED PRIOR TO GENERATOR OPERATION

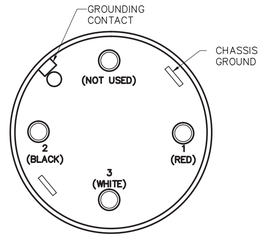

PIN CONFIGURATION MUST BE VERIFIED PRIOR TO GENERATOR OPERATION

RECEPTACLE PIN-OUT DIAGRAM

SCALE: N.T.S. | 4

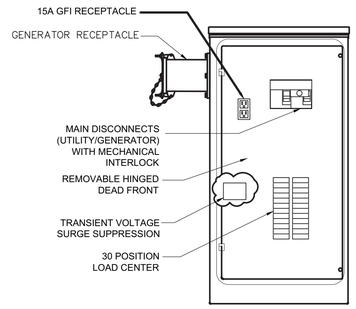

NTI/EMERSON P/N# CAC–PED1
PPC (MINI)
T–MOBILE SAP# NOT ISSUED
UL LISTED # E209771

PPC CABINET ("A" PANEL)

SCALE: N.T.S. | 1

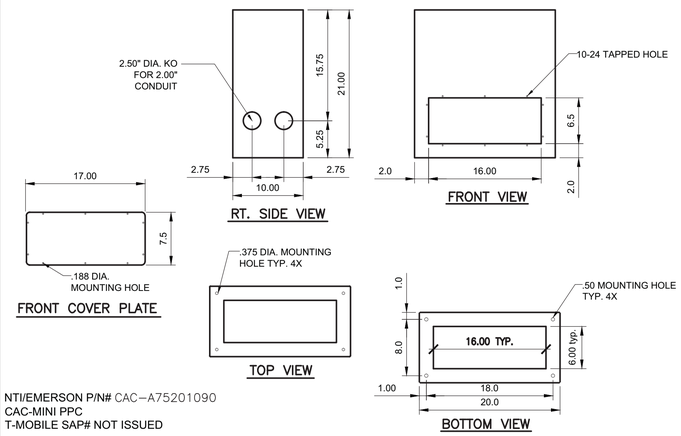

NTI/EMERSON P/N# CAC–A75201090
CAC-MINI PPC
T-MOBILE SAP# NOT ISSUED

NOTE:
USE ONLY WITH THE CAC-A75201090 PPC

PPC BASE PEDESTAL (OPTIONAL)

SCALE: N.T.S. | 8

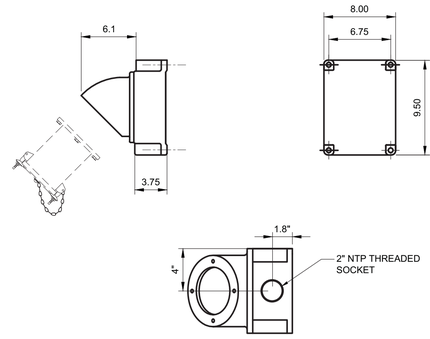

NTI/EMERSON P/N# 0704002-00
45° ELBOW WITH MOUNTING BOX
T-MOBILE SAP# NOT ISSUED

RECEPTACLE REMOTE MOUNTING BOX

SCALE: N.T.S. | 5

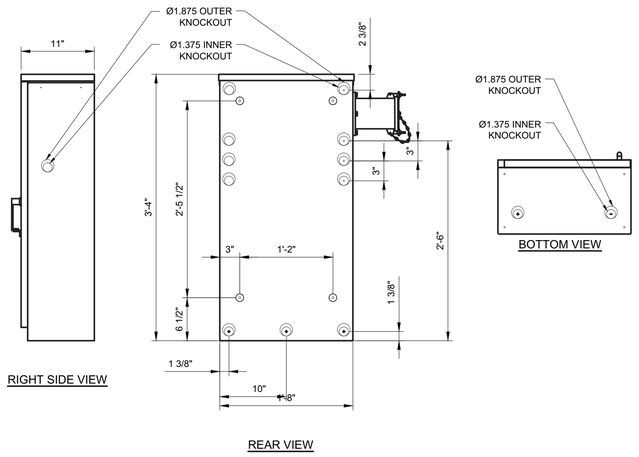

PPC CABINET (HOLE LAYOUT)

SCALE: N.T.S. | 2

1. BATTERY MANUFACTURER:	NORTHSTAR BATTERY COMPANY
2. ADDRESS:	400 CONTINENTAL WAY SPRINGFIELD, MISSOURI 65803
3. PHONE:	(415) 575–8205
4. FAX:	(415) 575–8250
5. BATTERY TYPE:	NSB 100 FT
6. BATTERY WEIGHT:	72.8 LBS. PER BATTERY
7. ELECTROLYTE QUANITY:	1.33 GALLONS PER BATTERY
8. % OF ACID IN ELECTROLYTES:	42% PER BATTERY
9. ACID QUANITY:	.56 GALLONS PER BATTERY
10. BATTERY QUANITY PER CABINET:	4 MAXIMUM
11. TOTAL WEIGHT:	4 BATTERIES X 72.8 LBS = 291.2 LBS
12. ELECTROLYTE QTY. PER CABINET:	4 BATTERIES X 1.33 GALLONS = 5.32 GALLONS

BATTERY SUMMARY:

1. NUMBER OF CABINETS:	6 CABINETS MAX
2. TOTAL WEIGHT OF BATTERIES:	1,747.2 LBS.
3. TOTAL ELECTROLYTES:	31.92 GALLONS
4. TOTAL ACID:	13.44 GALLONS
5. ARTICLE 64:	NOT APPLICABLE
6. ARTICLE 80:	NOT APPLICABLE

BATTERY INFO

SCALE: N.T.S. | 9

6

NORTHERN TECHNOLOGIES, INC.
LIBERTY LAKE, WA. 99019
UL FILE# E209771

- 200 OR 100 AMP 240 VOLTS, AC, SINGLE PHASE ALTERNATING CURRENT CIRCUIT ONLY.
- SUITABLE FOR USE IN ACCORDANCE WITH ARTICLE 702 OF THE NATIONAL ELECTRIC CODE.
- BONDED NEUTRAL WHEN INSTALLED AS SHOWN ON WIRING DIAGRAM
- DO NOT PAD MOUNT TO CONCRETE WITHOUT OPTIONAL PAD MOUNTING BASE.
- USE CU-AL WIRE 60-75 C.
- 200 AMP SERIES EQUIPPED WITH SQUARE D BREAKERS
- REPLACE LOAD CENTER BREAKERS USE ONLY SQUARE D (QO TYPE) OF THE SAME RATING.
- WHEN RESETTING BREAKERS TURN TO OFF POSITION, THEN TO ON POSITION.
- WARNING: MAKE CONTINUITY CHECK WITH OHM METER TO VERIFY CORRECT PHASING AND GROUNDING CONNECTIONS.

NTI/EMERSON PN# 0501067
THE 50A, 2–POLE LOAD CENTER BREAKER (FOR BTS)
T–MOBILE SAP# NOT ISSUED

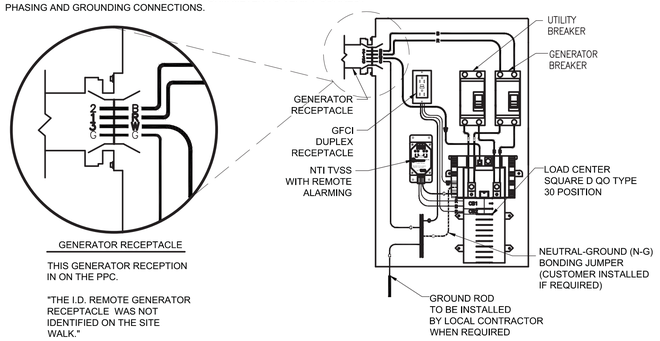

GENERATOR RECEPTACLE

THIS GENERATOR RECEPTION IN ON THE PPC.

"THE I.D. REMOTE GENERATOR RECEPTACLE WAS NOT IDENTIFIED ON THE SITE WALK."

PPC CABINET (WIRING DIAGRAM)

SCALE: N.T.S. | 3

Nov 12, 2015 – 9:54am

T-Mobile
Stick Together
4100 GUARDIAN ST., SUITE 101
SIMI VALLEY, CA 93063

PROJECT INFORMATION:

TM001 PEPPERDINE KECK BUILDING
SV00586E

24255 PACIFIC COAST HWY.
MALIBU, CA 90263
COUNTY OF LOS ANGELES

CURRENT ISSUE DATE: 11/13/15

ISSUED FOR: CONSTRUCTION

REV.:	DATE:	DESCRIPTION:	BY:
A	9/17/15	90% CD ISSUED FOR REVIEW	PAD
B	11/06/15	90% CD REVISED PER CHANGE IN S.O.W.	RAS
1	11/13/15	100% CD REVISED PER D.R.M. AND B&S PLAN CHECK COMMENTS	RAS

PLANS PREPARED BY:
Synergy Development Services, INC.
7543 Woodley Ave #201 Van Nuys, CA 91406
Office: (818) 840-0808 Fax: (818) 688-8066

CONSULTANT:
Synergy Development Services, INC.
7543 Woodley Ave #201 Van Nuys, CA 91406
Office: (818) 840-0808 Fax: (818) 688-8066

DRAWN BY:	CHK.:	APV.:
RAS	SYNERGY	AB

LICENSURE:
REGISTERED PROFESSIONAL ENGINEER ADAM BRONNENKANT C74190 EXP.6/30/17 CIVIL STATE OF CALIFORNIA

SHEET TITLE: DETAILS

SHEET NUMBER: E-3 REVISION: 1

SV00586E

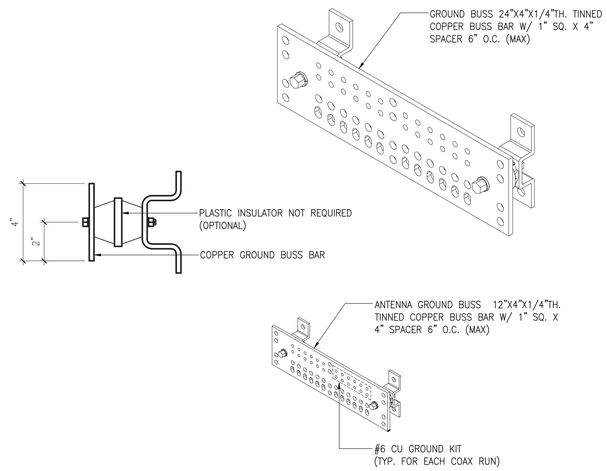

SCALE:	7
N.T.S.	

GROUND BAR

SCALE:	4
N.T.S.	

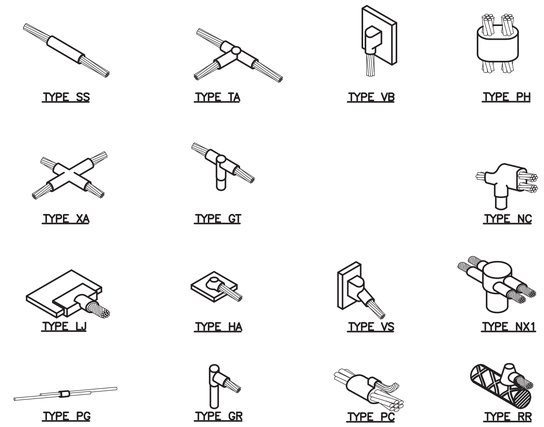

CADWELD CONNECTIONS

SCALE:	1
N.T.S.	

CATALOG NUMBER	VOLTAGE RATINGS	WIRING DIAG.	HORSEPOWER RATINGS		KNOCKOUTS ♦	
			240VAC	480VAC	BOTTOM	LEFT SIDE
DTU224NRB 82344RB	240VAC 480VAC; 250VDC	B A	15 – 1Ø –	– 15 – 3Ø	(1) 1.25,1.50,2.00,2.50 (2) 1.50,2.00 (1) 1.25,1.50,2.00,2.50 (2) 1.50,2.00	(1) 1.00,1.50,2.00,2.50 (1) 1.00,1.50,2.00,2.50

TERMINAL LUGS			
AMPERES	MAX. WIRE	MIN. WIRE	TYPE
200	300 KCMIL	# 6 AWG	AL/CU

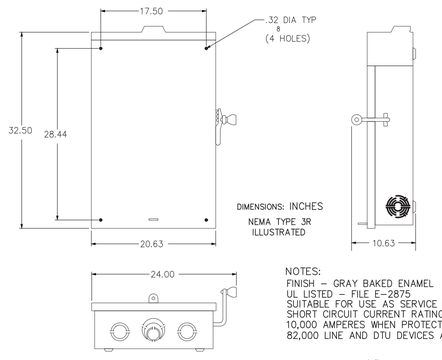

SQUARE D P/N# DTU224NRB
DOUBLE THROW SAFETY SWITCH
T-MOBILE SAP# CONTRACTOR SUPPLIED

NOTES:
FINISH – GRAY BAKED ENAMEL
UL LISTED – FILE E-2875
SUITABLE FOR USE AS SERVICE EQUIPMENT.
SHORT CIRCUIT CURRENT RATING:
10,000 AMPERES WHEN PROTECTED BY CLASS H OR K FUSES.
82,000 LINE AND DTU DEVICES ARE QUICK-MAKE, QUICK-BREAK.

♦ TOP OF NEMA TYPE 3R DEVICES HAVE PROVISIONS FOR MAXIMUM 2 1/2" BOLT-ON HUB.
▲ SERVICE GROUND NOT SUPPLIED. ORDER SEPARATELY AS SERVICE EQUIPMENT

SCALE:	8
N.T.S.	

DOUBLE THROW SAFETY SWITCH

SCALE:	5
N.T.S.	

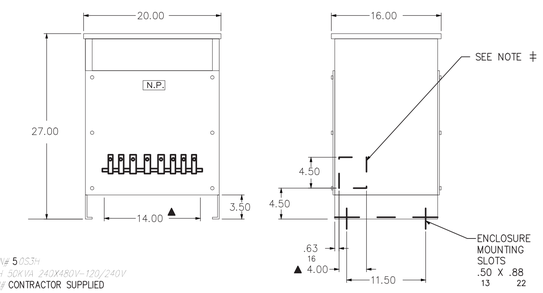

SQUARE D P/N# 5053H
XFMR DRY 1PH 50KVA 240X480V-120/240V
T-MOBILE SAP# CONTRACTOR SUPPLIED

KVA	CATALOG NUMBERS			GUAR. SOUND LEVEL IN DB'S	WGT LBS	A.V. ℄ Z
	240 X 480V PRIMARY	480V PRIMARY	600V PRIMARY			
15	15S1H	15S40H	15S5H	45	170	5.4
25	25S3H	–	25S5H	45	200	6.1

480 VOLT CONNECTION	
PRIMARY VOLTS	CONNECT TO TAPS
480	1 AND 4
456	1 AND 3
432	2 AND 3

240 VOLT CONNECTION CONNECT H1 TO H3, H2 TO H4 CONNECT LINES TO H1 & H4	
PRIMARY VOLTS	CONNECT TO TAPS
252	1 AND 8
240	2 AND 7
228	3 AND 6
216	4 AND 5

NOTES: UL LISTED
150°C RISE ABOVE 40°C AMBIENT
MINIMUM CLEARANCE OF 6.00IN 152MM BETWEEN VENT OPENINGS, WALL OR OTHER OBSTRUCTION.
USE WEATHERSHIELD CATALOG NO. WS363

● WALL MOUNTING BRACKETS CATALOG NO. WMB361-362
▲ SPACE AVAILABLE IN BOTTOM FOR CUSTOMERS CONDUIT ENTRANCE.
‡ SPACE AVAILABLE ON BOTH ENDS FOR CUSTOMERS CONDUIT.

SCALE:	2
N.T.S.	

XFMR DRY 1PH 50KVA 240X480V-120/240V

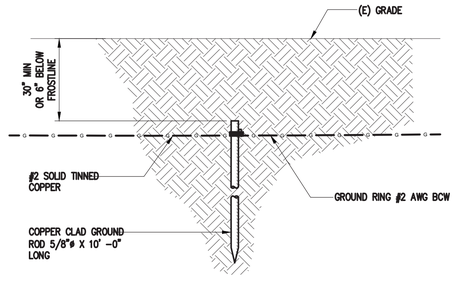

SCALE:	9
N.T.S.	

GROUND ROD DETAILS

SCALE:	6
N.T.S.	

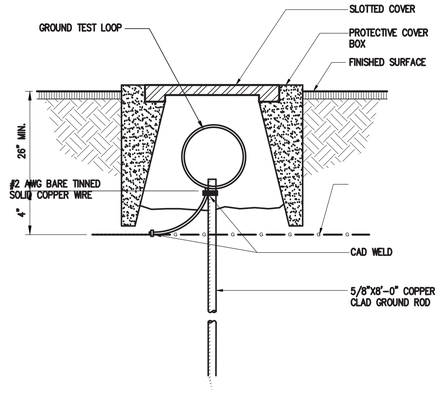

SCALE:	3
N.T.S.	

GROUND ROD ACCESS DETAIL

T-Mobile
Stick Together

4100 GUARDIAN ST., SUITE 101
SIMI VALLEY, CA 93063

PROJECT INFORMATION:

TM001 PEPPERDINE KECK BUILDING
SV00586E

24255 PACIFIC COAST HWY.
MALIBU, CA 90263
COUNTY OF LOS ANGELES

CURRENT ISSUE DATE:
11/13/15

ISSUED FOR:
CONSTRUCTION

REV.:	DATE:	DESCRIPTION:	BY:
A	9/17/15	90% CD ISSUED FOR REVIEW	PAD
B	11/06/15	90% CD REVISED PER CHANGE IN S.O.W.	RAS
1	11/13/15	100% CD REVISED PER D.R.M. AND B&S PLAN CHECK COMMENTS	RAS

PLANS PREPARED BY:

Synergy
Development Services, INC.
7543 Woodley Ave #201 Van Nuys, CA 91406
Office: (818) 840-0808 Fax: (818) 688-8066

CONSULTANT:

Synergy
Development Services, INC.
7543 Woodley Ave #201 Van Nuys, CA 91406
Office: (818) 840-0808 Fax: (818) 688-8066

DRAWN BY:	CHK.:	APV.:
RAS	SYNERGY	AB

LICENSURE:

SHEET TITLE:
DETAILS

SHEET NUMBER: E-4
REVISION: 1
SV00586E

Nov 12, 2015 – 9:54am

ANDREW. A CommScope Company

TMBXX-6516-R2M

DualPol®, Quad Panel Antenna

DualPol® Teletilt®

- Patented cross dipole and feed system
- Rugged, reliable design with excellent PIM suppression
- Includes factory installed AISG 2.0 RET actuator
- Fully compatible with Andrew Teletilt® remote control antenna system

ELECTRICAL

Frequency Range (MHz):	1710–2155
Characteristic Impedance (Ohms):	50
Azimuth BW (Deg):	64.5 ± 8
Elevation BW (Deg):	7.2 ± 1.2
Gain (dBi) :	17.5 ± 0.8
Polarization:	±45°
Front-to-Back Ratio (dB)	0° 2° 4° 6° 8° 10°
Copol, 180° ± 30°:	>24 >24 >24 >24 >24 >24
Total Power, 180° ± 30°:	>24 >24 >23 >22 >23 >23
Upper Sidelobe (dB)	0° 2° 4° 6° 8° 10°
Main Beam to +20°:	>18 >18 >17 >15 >14 >11
VSWR / Return Loss (dB):	1.35:1 / 16.5
Port-to-Port Isolation (dB):	>30
Electrical Tilt Range (Deg)*:	0–10
Electrical Downtilt Accuracy (Deg):	± 0.9
Cross-pol (dB)	0° 2° 4° 6° 8° 10°
3 dB Beamwidth:	>13 >13 >13 >12 >12 >12
Intermodulation Products (dBc)	
3rd Order, 2 x 20 Watts:	155
Max. Input Power (Watts):	250
Lightning Protection:	DC Ground

PERFORMANCE TRACKING

Gain Variation (dB) (between UL and DL frequency pair):	1.3
Electrical Tilt Accuracy (Deg) (between UL and DL frequency pair within 0-5°):	<0.55
Azimuth HPBW (Deg) (between UL and DL frequency pair):	11.5

MECHANICAL

Net Weight (kg / lbs):	15.7 / 34.6
Dimensions–LxWxD: (with actuator)	1513 x 305 x 166 mm 59.5 x 12 x 6.5 inch
Length without actuator	1294 mm / 50.9 inch
Max. Wind Area (m² / ft²):	0.27 / 2.9
Max. Wind Load (N / lbf):	729.4 / 164
Max. Wind Speed (km/h / mph):	241 / 150
Hardware Material:	Hot Dip Galvanized
Connector Type:	7-16 DIN, Female (4)
Color:	Off White
Standard Mounting Hardware:	TM600899A-2

*Specifications may vary when using 0° or 1° electrical tilt.

©2005 CommScope, Inc. All rights reserved.
All trademarks identified by ® or ™ are registered trademarks or trademarks, respectively, of CommScope. All trademarks identified by ® or ™ are registered trademarks or trademarks, respectively, of CommScope. This document is for planning purposes only and is not intended to modify or supplement any specifications or warranties relating to Andrew Wireless Solutions products or services.
TMBXX-6516-R2M

Information correct at date of issue but may be subject to change without notice.

ANDREW. A CommScope Company

TMBXX-6516-R2M

DualPol®, Quad Panel Antenna

DualPol® Teletilt®

AZIMUTH PATTERN | **ELEVATION PATTERN**

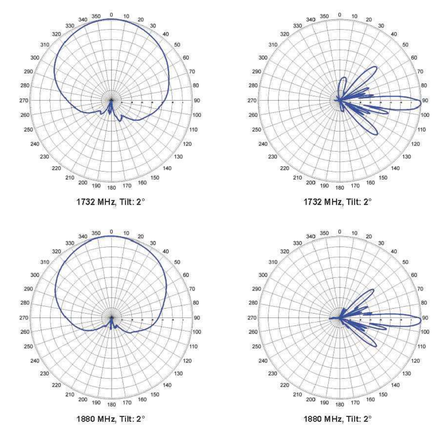

Note: Scale 5 dB per division.

©2005 CommScope, Inc. All rights reserved.
All trademarks identified by ® or ™ are registered trademarks or trademarks, respectively, of CommScope. All trademarks identified by ® or ™ are registered trademarks or trademarks, respectively, of CommScope. This document is for planning purposes only and is not intended to modify or supplement any specifications or warranties relating to Andrew Wireless Solutions products or services.
TMBXX-6516-R2M

Information correct at date of issue but may be subject to change without notice.

Product Specifications

COMMSCOPE®

on the go

Andrew Solutions
SBNHH-1D65B

Andrew® DualPol® Tri-band Teletilt® SmartBeam® Antenna, 1 x 698–896 MHz and 2 x 1710–2360 MHz, 65° horizontal beamwidth, RET compatible

- Three DualPol® antennas under one radome
- Interleaved dipole technology providing for attractive, low wind load mechanical package

Electrical Specifications

Frequency Band, MHz	698–806	806–896	1710–1880	1850–1990	1920–2180	2300–2360
Gain, dBi	14.3	14.6	17.3	17.2	17.3	17.3
Beamwidth, Horizontal, degrees	68	64	70	67	66	60
Beamwidth, Vertical, degrees	12.0	10.7	5.7	5.4	4.8	4.5
Beam Tilt, degrees	0–14	0–14	0–7	0–7	0–7	0–7
USLS, typical, dB	15	15	14	14	14	14
Front-to-Back Ratio, Copolarization 180° ± 20°, dB	24	27	26	25	25	20
CPR at Boresight, dB	20	20	20	20	18	18
CPR at Sector, dB	10	10	10	8	10	6
Isolation, dB	28	28	29	29	29	29
Isolation, Intersystem, dB	30	30	30	30	30	30
VSWR | Return Loss, dB	1.5:1 | 14.0	1.5:1 | 14.0	1.5:1 | 14.0	1.5:1 | 14.0	1.5:1 | 14.0	1.5:1 | 14.0
PIM, 3rd Order, 2 x 20 W, dBc	-150	-150	-150	-150	-150	-150
Input Power per Port, maximum, watts	400	400	350	350	350	350
Polarization	±45°	±45°	±45°	±45°	±45°	±45°
Impedance	50 ohm	50 ohm	50 ohm	50 ohm	50 ohm	50 ohm
Lightning Protection	dc Ground	dc Ground	dc Ground	dc Ground	dc Ground	dc Ground

Mechanical Specifications

Color | Radome Material	Light gray | Fiberglass, UV resistant
Connector Interface | Location | Quantity	7-16 DIN Female | Bottom | 6
Wind Loading, maximum	617.7 N @ 150 km/h 138.9 lbf @ 150 km/h
Wind Speed, maximum	241.4 km/h | 150.0 mph

Dimensions

Depth	181.0 mm | 7.1 in
Length	1828.80 mm | 72.00 in
Width	301.00 mm | 11.85 in
Net Weight	23.00 kg | 50.71 lb

Remote Electrical Tilt (RET) Information

Annual Failure Rate, maximum	0.01%
Power Consumption, during motor movements, maximum	11.0 W
Power Consumption, idle state, maximum	2.0 W
Power Input	10–30 V
Protocol	3GPP/AISG 2.0 Multi-RET

©2013 CommScope, Inc. All rights reserved. All trademarks identified by ® or ™ are registered trademarks, respectively, of CommScope.
All specifications are subject to change without notice. See www.commscope.com for the most current information. Revised: April 9, 2013

Product Specifications

COMMSCOPE®

on the go

SBNHH-1D65B

RET Interface	RS-485 Female (daisy chain port ,1) | RS-485 Male (input port, 1)

Regulatory Compliance/Certifications

Agency	Classification
RoHS 2011/65/EU	Compliant by Exemption
China RoHS SJ/T 11364-2006	Above Maximum Concentration Value (MCV)
ISO 9001:2008	Designed, manufactured and/or distributed under this quality management system

Included Products

DB380-5083 — Standard two point mounting system to secure BSA panels to pipes with an OD measuring 2.4-4.5" (60-115mm). Includes locking downtilt brackets and heavy guage pipe brackets to provide superior windload performance.

©2013 CommScope, Inc. All rights reserved. All trademarks identified by ® or ™ are registered trademarks, respectively, of CommScope.
All specifications are subject to change without notice. See www.commscope.com for the most current information. Revised: April 9, 2013

ANTENNA SPECIFICATIONS

1

Nov 12, 2015 – 9:54am

T-Mobile Stick Together®

4100 GUARDIAN ST., SUITE 101
SIMI VALLEY, CA 93063

PROJECT INFORMATION:

TM001 PEPPERDINE KECK BUILDING
SV00586E

24255 PACIFIC COAST HWY.
MALIBU, CA 90263
COUNTY OF LOS ANGELES

CURRENT ISSUE DATE:

11/13/15

ISSUED FOR:

CONSTRUCTION

REV.:	DATE:	DESCRIPTION:	BY:
A	9/17/15	90% CD ISSUED FOR REVIEW	PAD
B	11/06/15	90% CD REVISED PER CHANGE IN S.O.W.	RAS
1	11/13/15	100% CD REVISED PER D.R.M. AND B&S PLAN CHECK COMMENTS	RAS

PLANS PREPARED BY:

Synergy Development Services, INC.
7543 Woodley Ave #201 Van Nuys, CA 91406
Office: (818) 840-0808 Fax: (818) 688-8066

CONSULTANT:

Synergy Development Services, INC.
7543 Woodley Ave #201 Van Nuys, CA 91406
Office: (818) 840-0808 Fax: (818) 688-8066

DRAWN BY:	CHK.:	APV.:
RAS	SYNERGY	AB

LICENSURE:

REGISTERED PROFESSIONAL ENGINEER
ADAM BRONNENKANT
C74190
EXP.6/30/17
CIVIL
STATE OF CALIFORNIA

SHEET TITLE:

SPECIFICATIONS

SHEET NUMBER: RF-1

REVISION: 1

SV00586E

NOT USED | 3

4 Hardware Architecture

This section describes the RRUS hardware structure regardless of configuration or frequency. The RRUS components are shown in Figure 6 and listed in Table 10.

Note: The supported configurations are described in *RBS Configurations*.

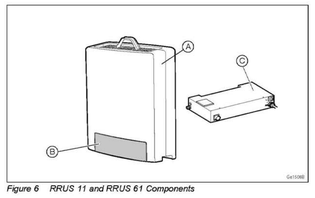

Figure 6 RRUS 11 and RRUS 61 Components

Table 10 Key to RRUS Components

Position	Component
A	Solar shield
B	Slide cover
C	PSU AC 02 (optional)

4.1 RRUS Overview

The RRUS contains most of the radio processing hardware. The following sections describe the component units inside the RRUS.

Description	Value	
Width	431 mm	16.968 in
Depth	182 mm	7.165 in
Weight		
RRUS 11	23 kg	50.07 lbs
Color		
Gray	NCS S2502-R	

(1) For RRUS 11 B7, 2x30W is guaranteed for operating ambient temperatures < +30 °C. For higher temperatures, 2x20W is guaranteed.
(2) Detailed information about LTE licences can be found in ***License Management****. Detailed information about WCDMA licences can be found in* ***Licenses and Hardware Activation Codes****.*
(3) RRUS 11 for B12 has a bandwidth that is 2 MHz narrower than 3GPP. The supported frequency corresponds to EARFCN (Channel Numbers) of 5010-5169 in downlink and 23010-23169 in uplink.

The RRUS 11 size, height, width, and depth with solar shield, is shown in Figure 2.

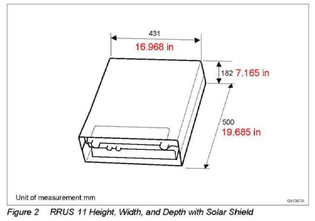

Figure 2 RRUS 11 Height, Width, and Depth with Solar Shield

3.1.2 RRUS 61 Dimensions

Table 2 lists the technical data for the RRUS 61. Figure 3 shows the dimensions for the RRUS 61.

REMOTE RADIO UNIT SPECIFICATIONS | 2

Product Specifications

ANDREW A CommScope Company

VHLP1-23

Antenna Dimensions And Mounting Information

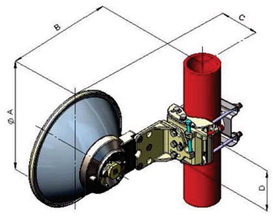

Dimensions in inches (mm)				
Antenna Size, ft (m)	A	B	C	D
1(0.3)	15.3 (388)	14.1 (358)	8.6 (219)	5.9 (150)

* Footnotes

Axial Force (FA)	Maximum forces exerted on a supporting structure as a result of wind from the most critical direction for this parameter. The individual maximums specified may not occur simultaneously. All forces are referenced to the mounting pipe.
Cross Polarization Discrimination (XPD)	The difference between the peak of the co-polarized main beam and the maximum cross-polarized signal over an angle twice the 3 dB beamwidth of the co-polarized main beam.
Front-to-Back Ratio	Denotes highest radiation relative to the main beam, at 180° ±40°, across the band. Production antennas do not exceed rated values by more than 2 dB unless stated otherwise.
Gain, Mid Band	For a given frequency band, gain is primarily a function of antenna size. The gain of Andrew antennas is determined by either gain by comparison or by computer integration of the measured antenna patterns.
Operating Frequency Band	Bands correspond with CCIR recommendations or common allocations used throughout the world. Other ranges can be accommodated on special order.

www.commscope.com/andrew

©2011 CommScope, Inc. All rights reserved.
All trademarks identified by ® or ™ are registered trademarks or trademarks, respectively, of CommScope.All specifications are subject to change.
See www.commscope.com/andrew for the most current information.

Product Specifications

ANDREW A CommScope Company

VHLP1-23

0.3 m | 1 ft ValuLine® High Performance Low Profile Antenna, single-polarized, 21.200–23.600 GHz

CHARACTERISTICS

General Specifications

Antenna Type	VHLP - ValuLine® High Performance Low Profile Antenna, single-polarized
Diameter, nominal	0.3 m | 1 ft
Polarization	Single

Electrical Specifications

Beamwidth, Horizontal	3.0 °
Beamwidth, Vertical	3.0 °
Cross Polarization Discrimination (XPD)	30 dB
Electrical Compliance	Brazil Anatel Class 2 | Canada SRSP 321.8 Part B | ETSI 302 217 Class 3 | US FCC Part 101A
Front-to-Back Ratio	62 dB
Gain, Low Band	34.7 dBi
Gain, Mid Band	35.3 dBi
Gain, Top Band	35.9 dBi
Operating Frequency Band	21.200 – 23.600 GHz
Radiation Pattern Envelope Reference (RPE)	7014A
Return Loss	17.7 dB
VSWR	1.30

Mechanical Specifications

Fine Azimuth Adjustment	±10°
Fine Elevation Adjustment	±25°
Mounting Pipe Diameter	50 mm–115 mm | 2 in–4.5 in
Net Weight	7 kg | 14 lb

www.commscope.com/andrew

©2011 CommScope, Inc. All rights reserved.
All trademarks identified by ® or ™ are registered trademarks or trademarks, respectively, of CommScope.All specifications are subject to change.
See www.commscope.com/andrew for the most current information.

MICROWAVE DISH ANTENNA SPECIFICATIONS | 1

T-Mobile Stick Together

4100 GUARDIAN ST., SUITE 101
SIMI VALLEY, CA 93063

PROJECT INFORMATION:

TM001 PEPPERDINE KECK BUILDING
SV00586E

24255 PACIFIC COAST HWY.
MALIBU, CA 90263
COUNTY OF LOS ANGELES

CURRENT ISSUE DATE:

11/13/15

ISSUED FOR:

CONSTRUCTION

REV.:	DATE:	DESCRIPTION:	BY:
A	9/17/15	90% CD ISSUED FOR REVIEW	PAD
B	11/06/15	90% CD REVISED PER CHANGE IN S.O.W.	RAS
1	11/13/15	100% CD REVISED PER D.R.M. AND B&S PLAN CHECK COMMENTS	RAS

PLANS PREPARED BY:

Synergy Development Services, INC.
7543 Woodley Ave #201 Van Nuys, CA 91406
Office: (818) 840-0808 Fax: (818) 688-8066

CONSULTANT:

Synergy Development Services, INC.
7543 Woodley Ave #201 Van Nuys, CA 91406
Office: (818) 840-0808 Fax: (818) 688-8066

DRAWN BY:	CHK.:	APV.:
RAS	SYNERGY	AB

LICENSURE:

REGISTERED PROFESSIONAL ENGINEER ADAM BRONNENGRAT C74190 EXP.6/30/17 CIVIL STATE OF CALIFORNIA

SHEET TITLE:

SPECIFICATIONS

SHEET NUMBER: RF-2

REVISION: 1

SV00586E

Nov 12, 2015 – 9:54am