GENERAL NOTES:

1. ALL GRADING AND CONSTRUCTION SHALL CONFORM TO THE 2011 COUNTY OF LOS ANGELES BUILDING CODES AND THE STATE MODEL WATER EFFICIENCY LANDSCAPE ORDINANCE UNLESS SPECIFICALLY NOTED ON THESE PLANS.

2. ANY MODIFICATIONS OF OR CHANGES TO APPROVED GRADING PLANS MUST BE APPROVED BY THE BUILDING OFFICIAL.

3. NO GRADING SHALL BE STARTED WITHOUT FIRST NOTIFYING THE BUILDING OFFICIAL. A PRE-GRADING MEETING AT THE SITE IS REQUIRED BEFORE THE START OF THE GRADING WITH THE FOLLOWING PEOPLE PRESENT: OWNER, GRADING CONTRACTOR, DESIGN CIVIL ENGINEER, SOILS ENGINEER, GEOLOGIST, COUNTY GRADING INSPECTOR(S) OR THEIR REPRESENTATIVES, AND WHEN REQUIRED THE ARCHEOLOGIST OR OTHER JURISDICTIONAL AGENCIES. PERMITTEE OR HIS AGENT ARE RESPONSIBLE FOR ARRANGING PRE-GRADE MEETING AND MUST NOTIFY THE BUILDING OFFICIAL AT LEAST TWO BUSINESS DAYS PRIOR TO PROPOSED PRE-GRADE MEETING.

4. APPROVAL OF THESE PLANS REFLECT SOLELY THE REVIEW OF PLANS IN ACCORDANCE WITH THE LOS ANGELES COUNTY BUILDING CODES AND DOES NOT REFLECT ANY POSITION BY THE COUNTY OF LOS ANGELES OR THE DEPARTMENT OF PUBLIC WORKS REGARDING THE STATUS OF ANY TITLE ISSUES RELATING TO THE LAND ON WHICH THE IMPROVEMENTS MAY BE CONSTRUCTED. ANY DISPUTES RELATING TO TITLE ARE SOLELY A PRIVATE MATTER NOT INVOLVING THE COUNTY OF LOS ANGELES OR THE DEPARTMENT OF PUBLIC WORKS.

5. ALL GRADING AND CONSTRUCTION ACTIVITIES SHALL COMPLY WITH LOS ANGELES COUNTY CODE, TITLE 12, SECTION 12.12.030 THAT CONTROLS AND RESTRICTS NOISE FROM THE USE OF CONSTRUCTION AND GRADING EQUIPMENT FROM THE HOURS OF 8:00 PM TO 6:30 AM, AND ON SUNDAYS AND HOLIDAYS. (MORE RESTRICTIVE CONSTRUCTION ACTIVITY TIMES MAY GOVERN, AS REQUIRED BY THE DEPARTMENT OF REGIONAL PLANNING AND SHOULD BE SHOWN ON THE GRADING PLANS WHEN APPLICABLE.)

6. CALIFORNIA PUBLIC RESOURCES CODE (SECTION 5097.98) AND HEALTH AND SAFETY CODE (SECTION 7050.5) ADDRESS THE DISCOVERY AND DISPOSITION OF HUMAN REMAINS. IN THE EVENT OF DISCOVERY OR RECOGNITION OF ANY HUMAN REMAINS IN ANY LOCATION OTHER THAN A DEDICATED CEMETERY, THE LAW REQUIRES THAT GRADING IMMEDIATELY STOPS AND NO FURTHER EXCAVATION OR DISTURBANCE OF THE SITE, OR ANY NEARBY AREA WHERE HUMAN REMAINS MAY BE LOCATED, OCCUR UNTIL THE FOLLOWING MEASURES HAVE BEEN TAKEN:

   a. THE COUNTY CORONER HAS BEEN INFORMED AND HAS DETERMINED THAT NO INVESTIGATION OF THE CAUSE OF DEATH IS REQUIRED, AND

   b. IF THE REMAINS ARE OF NATIVE AMERICAN ORIGIN, THE DESCENDANTS FROM THE DECEASED NATIVE AMERICANS HAVE MADE A RECOMMENDATION FOR THE MEANS OF TREATING OR DISPOSING, WITH APPROPRIATE DIGNITY, OF THE HUMAN REMAINS AND ANY ASSOCIATED GRAVE GOODS.

7. THE LOCATION AND PROTECTION OF ALL UTILITIES IS THE RESPONSIBILITY OF THE PERMITTEE.

8. ALL EXPORT OF MATERIAL FROM THE SITE MUST GO TO A PERMITTED SITE APPROVED BY THE BUILDING OFFICIAL OR A LEGAL DUMP SITE. RECEIPTS FOR ACCEPTANCE OF EXCESS MATERIAL BY A DUMP SITE ARE REQUIRED AND MUST BE PROVIDED TO THE BUILDING OFFICIAL UPON REQUEST.

9. A COPY OF THE GRADING PERMIT AND APPROVED GRADING PLANS MUST BE IN THE POSSESSION OF A RESPONSIBLE PERSON AND AVAILABLE AT THE SITE AT ALL TIMES.

10. SITE BOUNDARIES, EASEMENTS, DRAINAGE DEVICES, RESTRICTED USE AREAS SHALL BE LOCATED PER CONSTRUCTION STAKING BY FIELD ENGINEER OR LICENSED SURVEYOR. PRIOR TO GRADING, AS REQUESTED BY THE BUILDING OFFICIAL, ALL PROPERTY LINES, EASEMENTS, AND RESTRICTED USE AREAS SHALL BE STAKED.

11. NO GRADING OR CONSTRUCTION SHALL OCCUR WITHIN THE PROTECTED ZONE OF ANY OAK TREE AS REQUIRED PER TITLE CHAPTER 22.56 OF THE LOS ANGELES COUNTY ZONING CODE. THE PROTECTED ZONE SHALL MEAN THAT AREA WITHIN THE DRIP LINE OF AN OAK TREE EXTENDING THERE FROM A POINT AT LEAST FIVE FEET OUTSIDE THE DRIP LINE, OR 15 FEET FROM THE TRUNK(S) OF A TREE, WHICHEVER IS GREATER.

12. THE STANDARD RETAINING WALL DETAILS SHOWN ON THE GRADING PLANS ARE FOR REFERENCE ONLY. STANDARD RETAINING WALLS ARE NOT CHECKED, PERMITTED, OR INSPECTED PER THE GRADING PERMIT. A SEPARATE RETAINING WALL PERMIT IS REQUIRED FOR ALL STANDARD RETAINING WALLS.

   NOTE: THIS NOTE ONLY APPLIES TO STANDARD RETAINING WALLS. GEOGRID FABRIC AND SEGMENTAL RETAINING WALLS DO NOT REQUIRE A SEPARATE RETAINING WALL PERMIT. DETAILS AND CONSTRUCTION NOTES FOR ALL GEOGRID WALLS MUST BE ON THE GRADING PLAN.

13. A PREVENTIVE PROGRAM TO PROTECT THE SLOPES FROM POTENTIAL DAMAGE FROM BURROWING RODENTS IS REQUIRED PER SECTION J101.8 OF THE COUNTY OF LOS ANGELES BUILDING CODE. OWNER IS TO INSPECT SLOPES PERIODICALLY FOR EVIDENCE OF BURROWING RODENTS AND A FIRST EVIDENCE OF THEIR EXISTENCE SHALL EMPLOY AN EXTERMINATOR FOR THEIR REMOVAL.

14. IF GRADING AUTHORIZED BY THIS PLAN IS TO EXTEND THROUGH THE RAINY SEASON, NOVEMBER 1 THROUGH APRIL 15 OF THE FOLLOWING YEAR, SEPARATE UPDATED PLANS FOR EROSION CONTROL MUST BE SUBMITTED PRIOR TO OCTOBER PER SECTION J111.3 OF THE COUNTY OF LOS ANGELES BUILDING CODE.

15. TRANSFER OF RESPONSIBILITY: IF THE CIVIL ENGINEER, THE SOILS ENGINEER, OR THE ENGINEERING GEOLOGIST OF RECORD IS CHANGED DURING GRADING, THE WORK SHALL BE STOPPED UNTIL THE REPLACEMENT HAS AGREED IN WRITING TO ACCEPT THEIR RESPONSIBILITY WITHIN THE AREA OF TECHNICAL COMPETENCE FOR APPROVAL UPON COMPLETION OF THE WORK. IT SHALL BE THE DUTY OF THE PERMITTEE TO NOTIFY THE BUILDING OFFICIAL IN WRITING OF SUCH CHANGE PRIOR TO THE RECOMMENCEMENT OF SUCH GRADING.

INSPECTION NOTES:

16. THE PERMITEE OR HIS AGENT SHALL NOTIFY THE BUILDING OFFICIAL AT LEAST ONE WORKING DAY IN ADVANCE OF REQUIRED INSPECTIONS AT FOLLOWING STAGES OF THE WORK. (SECTION J105.7 OF THE BUILDING CODE.)

   (a) PRE-GRADE – BEFORE THE START OF ANY EARTH DISTURBING ACTIVITY OR CONSTRUCTION.

   (b) INITIAL – WHEN THE SITE HAS BEEN CLEARED OF VEGETATION AND UNAPPROVED FILL HAS BEEN SCARIFIED, BENCHED OR OTHERWISE PREPARED FOR FILL. FILL SHALL NOT BE PLACED PRIOR TO THIS INSPECTION. NOTE: PRIOR TO ANY CONSTRUCTION ACTIVITIES, INCLUDING GRADING, ALL STORM WATER POLLUTION PREVENTION MEASURES INCLUDING EROSION CONTROL DEVICES WHICH CONTAIN SEDIMENTS MUST BE INSTALLED.

   (c) ROUGH – WHEN APPROXIMATE FINAL ELEVATIONS HAVE BEEN ESTABLISHED; DRAINAGE TERRACES, SWALES AND BERMS INSTALLED AT THE TOP OF THE SLOPE; AND THE STATEMENTS REQUIRED IN THIS SECTION HAVE BEEN RECEIVED.

   (d) FINAL – WHEN GRADING HAS BEEN COMPLETED; ALL DRAINAGE DEVICES INSTALLED; SLOPE PLANTING ESTABLISHED, IRRIGATION SYSTEMS INSTALLED AND THE AS-BUILT PLANS, REQUIRED STATEMENTS, AND REPORTS HAVE BEEN SUBMITTED AND APPROVED.

17. IN ADDITION TO THE INSPECTION REQUIRED BY THE BUILDING OFFICIAL FOR REGULAR GRADING, REPORTS AND STATEMENTS SHALL BE SUBMITTED TO THE BUILDING OFFICIAL IN ACCORDANCE WITH SECTIONS J105 OF THE COUNTY OF LOS ANGELES BUILDING CODE.

18. UNLESS OTHERWISE DIRECTED BY THE BUILDING OFFICIAL, THE FIELD ENGINEER FOR ALL ENGINEERED GRADING PROJECTS SHALL PREPARE ROUTINE INSPECTION REPORTS AS REQUIRED UNDER SECTION J105.11 OF THE COUNTY OF LOS ANGELES BUILDING CODE. THESE REPORTS, KNOWN AS "REPORT OF GRADING ACTIVITIES", SHALL BE SUBMITTED TO THE BUILDING OFFICIAL AS FOLLOWS:

   1. BI-WEEKLY DURING ALL TIMES WHEN GRADING OF 400 CUBIC YARDS OR MORE PER WEEK IS OCCURRING ON THE SITE;
   2. MONTHLY, AT ALL OTHER TIMES; AND
   3. AT ANY TIME WHEN REQUESTED IN WRITING BY THE BUILDING OFFICIAL.

   SUCH "REPORT OF GRADING ACTIVITIES" SHALL CERTIFY TO THE BUILDING OFFICIAL THAT THE FIELD ENGINEER HAS INSPECTED THE GRADING SITE AND RELATED ACTIVITIES AND HAS FOUND THEM IN COMPLIANCE WITH THE APPROVED GRADING PLANS AND SPECIFICATIONS, THE BUILDING CODE, ALL GRADING PERMIT CONDITIONS, AND ALL OTHER APPLICABLE ORDINANCES AND REQUIREMENTS. THIS FORM IS AVAILABLE AT THE FOLLOWING WEBSITE HTTP://DPW.LACOUNTY.GOV/BSD/DG/DEFAULT.ASPX. "REPORT OF GRADING ACTIVITIES" MAY BE SCANNED AND UPLOADED AT THE WEBSITE OR FAXED TO (310) 530-5482. FAILURE TO PROVIDE REQUIRED INSPECTION REPORTS WILL RESULT IN A "STOP WORK ORDER."

19. ALL GRADED SITES MUST HAVE DRAINAGE SWALES, BERMS, AND OTHER DRAINAGE DEVICES INSTALLED PRIOR TO ROUGH GRADING APPROVAL. PER SECTION J105.7 OF THE COUNTY OF LOS ANGELES BUILDING CODE.

20. THE GRADING CONTRACTOR SHALL SUBMIT THE STATEMENT TO THE GRADING INSPECTOR AS REQUIRED BY SECTION J105.12 OF THE COUNTY OF LOS ANGELES BUILDING CODE AT THE COMPLETION OF ROUGH GRADING.

21. FINAL GRADING MUST BE APPROVED BEFORE OCCUPANCY OF BUILDINGS WILL BE ALLOWED PER SECTION J105 OF THE COUNTY OF LOS ANGELES BUILDING CODE.

DRAINAGE NOTES:

22. ROOF DRAINS MUST BE DIVERTED FROM GRADED SLOPES.

23. PROVISIONS SHALL BE MADE FOR CONTRIBUTORY DRAINAGE AT ALL TIMES.

24. ALL CONSTRUCTION AND GRADING WITHIN A STORM DRAIN EASEMENT ARE TO BE DONE PER PRIVATE DRAIN PD NO.__________OR MISCELLANEOUS TRANSFER DRAIN MTD NO._________.

25. ALL STORM DRAIN WORK IS TO BE DONE UNDER CONTINUOUS INSPECTION BY THE FIELD ENGINEER. STATUS REPORTS REQUIRED UNDER NOTE 18 AND SECTION J105.11 OF THE COUNTY OF LOS ANGELES BUILDING CODE SHALL INCLUDE INSPECTION INFORMATION AND REPORTS ON THE STORM DRAIN INSTALLATION.

AGENCY NOTES:

26. ~~AN ENCROACHMENT PERMIT FROM (COUNTY OF LOS ANGELES DEPARTMENT OF PUBLIC WORKS)(CALTRANS)(CITY OF ________) IS REQUIRED FOR ALL WORK WITHIN OR AFFECTING ROAD RIGHT OF WAY. ALL WORK WITHIN ROAD RIGHT OF WAY SHALL CONFORM TO (COUNTY OF LOS ANGELES DEPARTMENT OF PUBLIC WORKS)(CALTRANS)(CITY OF ______________) ENCROACHMENT PERMIT.~~

27. ~~AN ENCROACHMENT PERMIT/CONNECTION PERMIT IS REQUIRED FROM THE COUNTY OF LOS ANGELES FLOOD CONTROL DISTRICT FOR ALL WORK WITHIN THE COUNTY OF LOS ANGELES FLOOD CONTROL DISTRICT RIGHT OF WAY. ALL WORK SHALL BE CONFORMED PER THE~~ CONDITIONS SET BY THE PERMIT.

28. PERMISSION TO OPERATE IN VERY HIGH FIRE HAZARD SEVERITY ZONE MUST BE OBTAINED FROM THE FIRE PREVENTION BUREAU OR THE LOCAL FIRE STATION PRIOR TO COMMENCING WORK.

29. ~~ALL WORK WITHIN THE STREAM BED AND AND AREAS OUTLINED ON GRADING PLANS SHALL CONFORM TO: ARMY CORP 404 PERMIT NO. __________ CALIFORNIA FISH AND GAME PERMIT NO. ________~~

30. ALL CONSTRUCTION/DEMOLITION, GRADING, AND STORAGE OF BULK MATERIALS MUST COMPLY WITH THE LOCAL AQMD RULE 403 FOR FUGITIVE DUST. INFORMATION ON RULE 403 IS AVAILABLE AT AQMD'S WEBSITE HTTP://WWW.AVAQMD.CA.GOV.

GENERAL GEOTECHNICAL NOTES:

31. ALL WORK MUST BE IN COMPLIANCE WITH THE RECOMMENDATIONS INCLUDED IN THE GEOTECHNICAL CONSULTANT'S REPORT(S) AND THE APPROVED GRADING PLANS AND SPECIFICATIONS.

32. GRADING OPERATIONS MUST BE CONDUCTED UNDER PERIODIC INSPECTIONS BY THE GEOTECHNICAL CONSULTANTS WITH MONTHLY INSPECTION REPORTS TO BE SUBMITTED TO THE GEOLOGY AND SOILS SECTION. (900 S. FREMONT, ALHAMBRA, CA 91803 – 3RD FLOOR)

33. THE SOIL ENGINEER SHALL PROVIDE SUFFICIENT INSPECTIONS DURING THE PREPARATION OF THE NATURAL GROUND AND THE PLACEMENT AND COMPACTION OF THE FILL TO BE SATISFIED THAT THE WORK IS BEING PERFORMED IN ACCORDANCE WITH THE PLAN AND APPLICABLE CODE REQUIREMENTS.

34. ROUGH GRADING MUST BE APPROVED BY A FINAL ENGINEERING GEOLOGY AND SOILS ENGINEERING REPORT. AN AS-BUILT GEOLOGIC MAP MUST BE INCLUDED IN THE FINAL GEOLOGY REPORT. PROVIDE A FINAL REPORT STATEMENT THAT VERIFIES WORK WAS DONE IN ACCORDANCE WITH REPORT RECOMMENDATIONS AND CODE PROVISIONS (SECTION J105.12 OF THE COUNTY OF LOS ANGELES BUILDING CODE). THE FINAL REPORT(S) MUST BE SUBMITTED TO THE GEOTECHNICAL AND MATERIALS ENGINEERING DIVISION FOR REVIEW AND APPROVAL.

35. FOUNDATION, WALL AND POOL EXCAVATIONS MUST BE INSPECTED AND APPROVED BY THE CONSULTING GEOLOGIST AND SOIL ENGINEER, PRIOR TO THE PLACING OF STEEL OR CONCRETE.

36. BUILDING PADS LOCATED IN CUT/FILL TRANSITION AREAS SHALL BE OVER-EXCAVATED A MINIMUM OF THREE(3) FEET BELOW THE PROPOSED BOTTOM OF FOOTING.

FILL NOTES:

37. ALL FILL SHALL BE COMPACTED TO THE FOLLOWING MINIMUM RELATIVE COMPACTION CRITERIA:

   a. 90 PERCENT OF MAXIMUM DRY DENSITY WITHIN 40 FEET BELOW FINISH GRADE.

   b. 93 PERCENT OF MAXIMUM DRY DENSITY DEEPER THAN 40 FEET BELOW FINISH GRADE, UNLESS A LOWER RELATIVE COMPACTION (NOT LESS THAN 90 PERCENT OF MAXIMUM DRY DENSITY) IS JUSTIFIED BY THE GEOTECHNICAL ENGINEER. THE RELATIVE COMPACTION SHALL BE DETERMINED BY A.S.T.M. SOIL COMPACTION TEST D1557-91 WHERE APPLICABLE; WHERE NOT APPLICABLE, A TEST ACCEPTABLE TO THE BUILDING OFFICIAL SHALL BE USED. (SECTION J107.5 OF THE COUNTY OF LOS ANGELES BUILDING CODE.)

38. FIELD DENSITY SHALL BE DETERMINED BY A METHOD ACCEPTABLE TO THE BUILDING OFFICIAL. (SECTION J107.5 OF THE COUNTY OF LOS ANGELES BUILDING CODE.) HOWEVER, NOT LESS THAN 10% OF THE REQUIRED DENSITY TEST, UNIFORMLY DISTRIBUTED, AND SHALL BE OBTAINED BY THE SAND CONE METHOD.

39. SUFFICIENT TESTS OF THE FILL SOILS SHALL BE MADE TO DETERMINE THE RELATIVE COMPACTION OF THE FILL IN ACCORDANCE WITH THE FOLLOWING MINIMUM GUIDELINES:

   a. ONE TEST FOR EACH TWO-FOOT VERTICAL LIFT.

   b. ONE TEST FOR EACH 1,000 CUBIC YARDS OF MATERIAL PLACED.

   c. ONE TEST AT THE LOCATION OF THE FINAL FILL SLOPE FOR EACH BUILDING SITE (LOT) IN EACH FOUR-FOOT VERTICAL LIFT OR PORTION THEREOF.

   d. ONE TEST IN THE VICINITY OF EACH BUILDING PAD FOR EACH FOUR-FOOT VERTICAL LIFT OR PORTION THEREOF.

40. SUFFICIENT TESTS OF FILL SOILS SHALL BE MADE TO VERIFY THAT THE SOIL PROPERTIES COMPLY WITH THE DESIGN REQUIREMENTS, AS DETERMINED BY THE SOIL ENGINEER INCLUDING SOIL TYPES, SHEAR STRENGTHS PARAMETERS AND CORRESPONDING UNIT WEIGHTS IN ACCORDANCE WITH THE FOLLOWING GUIDELINES:

   a. PRIOR AND SUBSEQUENT TO ALL PLACEMENT OF THE FILL, SHEAR TESTS SHALL BE TAKEN ON EACH TYPE OF SOIL OR SOIL MIXTURE TO BE USED FOR ALL FILL SLOPES STEEPER THAN THREE (3) HORIZONTAL TO ONE VERTICAL.

   b. SHEAR TEST RESULTS FOR THE PROPOSED FILL MATERIAL MUST MEET OR EXCEED THE DESIGN VALUES USED IN THE GEOTECHNICAL REPORT TO DETERMINE SLOPE STABILITY REQUIREMENTS. OTHERWISE, THE SLOPE MUST BE REEVALUATED USING THE ACTUAL SHEAR TEST VALUE OF THE FILL MATERIAL THAT IS IN PLACE.

   c. FILL SOILS SHALL BE FREE OF DELETERIOUS MATERIALS.

41. FILL SHALL NOT BE PLACED UNTIL STRIPPING OF VEGETATION, REMOVAL OF UNSUITABLE SOILS, AND INSTALLATION OF SUBDRAIN (IF ANY) HAVE BEEN INSPECTED AND APPROVED BY THE SOIL ENGINEER. THE BUILDING OFFICIAL MAY REQUIRE A "STANDARD TEST METHOD FOR MOISTURE, ASH, ORGANIC MATTER, PEAT OR OTHER ORGANIC SOILS" ASTM D-2974-87 ON ANY SUSPECT MATERIAL. DETRIMENTAL AMOUNTS OF ORGANIC MATERIAL SHALL NOT BE PERMITTED IN FILLS. SOIL CONTAINING SMALL AMOUNTS OF ROOTS MAY BE ALLOWED PROVIDED THAT THE ROOTS ARE IN A QUANTITY AND DISTRIBUTED IN A MANNER THAT WILL NOT BE DETRIMENTAL TO THE FUTURE USE OF THE SITE AND THE SOILS ENGINEER APPROVES THE USE OF SUCH MATERIAL.

42. ROCK OR SIMILAR MATERIAL GREATER THAN 12 INCHES IN DIAMETER SHALL NOT BE PLACED IN THE FILL UNLESS RECOMMENDATIONS FOR SUCH PLACEMENT HAVE BEEN SUBMITTED BY THE SOIL ENGINEER AND APPROVED IN ADVANCE BY THE BUILDING OFFICIAL. LOCATION, EXTENT, AND ELEVATION OF ROCK DISPOSAL AREAS MUST BE SHOWN ON AN "AS-BUILT" GRADING PLAN.

43. CONTINUOUS INSPECTION BY THE SOIL ENGINEER, OR A RESPONSIBLE REPRESENTATIVE, SHALL BE PROVIDED DURING ALL FILL PLACEMENT AND COMPACTION OPERATIONS WHERE FILLS HAVE A DEPTH GREATER THAN 30 FEET OR SLOPE SURFACE STEEPER THAN 2:1. (SECTION J107.8 OF THE COUNTY OF LOS ANGELES BUILDING CODE)

44. CONTINUOUS INSPECTION BY THE SOIL ENGINEER, OR A RESPONSIBLE REPRESENTATIVE, SHALL BE PROVIDED DURING ALL SUB DRAIN INSTALLATION. (SECTION J107.2 OF THE COUNTY OF LOS ANGELES BUILDING CODE)

45. ALL SUB DRAIN OUTLETS ARE TO BE SURVEYED FOR LINE AND ELEVATION. SUB DRAIN INFORMATION MUST BE SHOWN ON AN "AS-BUILT" GRADING PLAN.

46. FILL SLOPES IN EXCESS OF 2:1 STEEPNESS RATIO ARE TO BE CONSTRUCTED BY THE PLACEMENT OF SOIL AT SUFFICIENT DISTANCE BEYOND THE PROPOSED FINISH SLOPE TO ALLOW COMPACTION EQUIPMENT TO BE OPERATED AT THE OUTER LIMITS OF THE FINAL SLOPE SURFACE. THE EXCESS FILL IS TO BE REMOVED PRIOR TO COMPLETION OF ROUGH GRADING. OTHER CONSTRUCTION PROCEDURES MAY BE USED WHEN IT IS DEMONSTRATED TO THE SATISFACTION OF THE BUILDING OFFICIAL THAT THAT THE ANGLE OF THE SLOPE, CONSTRUCTION METHOD AND OTHER FACTORS WILL HAVE EQUIVALENT EFFECT. (SECTION J107.5 OF THE COUNTY OF LOS ANGELES BUILDING CODE.)

PLANTING AND IRRIGATION NOTES:

47. PLANTING AND IRRIGATION ON GRADED SLOPES MUST COMPLY WITH THE FOLLOWING MINIMUM GUIDELINES:

   A. THE SURFACE OF ALL CUT SLOPES MORE THAN 5 FEET IN HEIGHT AND FILL SLOPES MORE THAN 3 FEET IN HEIGHT SHALL BE PROTECTED AGAINST DAMAGE BY EROSION BY PLANTING WITH GRASS OR GROUNDCOVER PLANTS. SLOPED EXCEEDING 15 FEET IN VERTICAL HEIGHT SHALL ALSO BE PLANTED WITH SHRUBS, SPACED AT NOT TO EXCEED 10 FEET ON CENTERS; OR TREES, SPACED AT NOT TO EXCEED 20 FEET ON CENTERS, OR A COMBINATION OF SHRUBS AND TREES AT EQUIVALENT SPACING, IN ADDITION TO THE GRASS OR GROUNDCOVER PLANTS. THE PLANTS SELECTED AND PLANTING METHODS USED SHALL BE SUITABLE FOR THE SOIL AND CLIMATIC CONDITIONS OF THE SITE. PLANT MATERIAL SHALL BE SELECTED WHICH WILL PRODUCE A COVERAGE OF PERMANENT PLANTING EFFECTIVELY CONTROLLING EROSION. CONSIDERATION SHALL BE GIVEN TO DEEP-ROOTED PLANTING MATERIAL NEEDING LIMITED WATERING, MAINTENANCE, HIGH ROOT TO SHOOT RATIO, WIND SUSCEPTIBILITY AND FIRE-RETARDANT CHARACTERISTICS. ALL PLANT MATERIALS MUST BE APPROVED BY THE BUILDING OFFICIAL. (SECTION J110.3 OF THE COUNTY OF LOS ANGELES BUILDING CODE)

   NOTE: PLANTING MAY BE MODIFIED FOR THE SITE IF SPECIFIC RECOMMENDATIONS ARE PROVIDED BY BOTH THE SOILS ENGINEER AND A LANDSCAPE ARCHITECT. SPECIFIC RECOMMENDATIONS MUST CONSIDER SOILS AND CLIMATIC CONDITIONS, IRRIGATION REQUIREMENTS, PLANTING METHODS, FIRE RETARDANT CHARACTERISTICS, WATER EFFICIENCY, MAINTENANCE NEEDS, AND OTHER REGULATORY REQUIREMENTS. RECOMMENDATIONS MUST INCLUDE A FINDING THAT THE ALTERNATIVE PLANTING WILL PROVIDE A PERMANENT AND EFFECTIVE METHOD OF EROSION CONTROL. MODIFICATIONS TO PLANTING MUST BE APPROVED BY THE BUILDING OFFICIAL PRIOR TO INSTALLATION.

   B. SLOPES REQUIRED TO BE PLANTED BY SECTION J110.3 SHALL BE PROVIDED WITH AN APPROVED SYSTEM OF IRRIGATION THAT IS DESIGNED TO COVER ALL PORTIONS OF THE SLOPE. IRRIGATION SYSTEM PLANS SHALL BE SUBMITTED AND APPROVED PRIOR TO INSTALLATION. A FUNCTIONAL TEST OF THE SYSTEM MAY BE REQUIRED. FOR SLOPES LESS THAN 20 FEET IN VERTICAL HEIGHT, HOSE BIBS TO PERMIT HAND WATERING WILL BE ACCEPTABLE IF SUCH HOSE BIBS ARE INSTALLED AT CONVENIENTLY ACCESSIBLE LOCATIONS WHERE A HOSE NO LONGER THAN 50 FEET IS NECESSARY FOR IRRIGATION. THE REQUIREMENTS FOR PERMANENT IRRIGATION SYSTEMS MAY BE MODIFIED UPON SPECIFIC RECOMMENDATION OF A LANDSCAPE ARCHITECT OR EQUIVALENT AUTHORITY THAT, BECAUSE OF THE TYPE OF PLANTS SELECTED, THE PLANTING METHODS USED AND THE SOIL AND CLIMATIC CONDITIONS OF THE SITE, IRRIGATION WILL BE NOT NECESSARY FOR THE MAINTENANCE OF THE SLOPE PLANTING. (SECTION J110.4 OF THE COUNTY OF LOS ANGELES BUILDING CODE)

   C. OTHER GOVERNMENTAL AGENCIES MAY HAVE ADDITIONAL REQUIREMENTS FOR LANDSCAPING AND IRRIGATION. IT IS THE RESPONSIBILITY OF THE APPLICANT TO COORDINATE WITH OTHER AGENCIES TO MEET THEIR REQUIREMENTS WHILE MAINTAINING COMPLIANCE WITH THE COUNTY OF LOS ANGELES BUILDING CODE.

48. THE PLANTING AND IRRIGATION SYSTEMS SHALL BE INSTALLED AS SOON AS PRACTICAL AFTER ROUGH GRADING. PRIOR TO FINAL GRADING APPROVAL ALL REQUIRED SLOPE PLANTING MUST BE WELL ESTABLISHED. (SECTION J110.7 OF THE COUNTY OF LOS ANGELES BUILDING CODE)

   LANDSCAPE IRRIGATION SYSTEMS SHALL BE DESIGNED AND MAINTAINED TO PREVENT SPRAY ON STRUCTURES. (TITLE 31, SECTION 5.407.2.1)

   PRIOR TO ROUGH GRADE APPROVAL THIS PROJECT REQUIRES A LANDSCAPE PERMIT. LANDSCAPE PLANS IN COMPLIANCE WITH THE "MODEL WATER EFFICIENT LANDSCAPE ORDINANCE" TITLE 23, CHAPTER 2.7 OF CALIFORNIA CODE OF REGULATIONS (AB 1881) MUST BE SUBMITTED TO THE DEPARTMENT OF PUBLIC WORKS, LAND DEVELOPMENT DIVISION. (900 S. FREEMONT AVE, ALHAMBRA-3RD FLOOR, CA 91803 (626) 458-4921.). TO OBTAIN LANDSCAPE PERMIT APPROVAL PLANS AND WATER PURVEYOR ACKNOWLEDGEMENT FORM MUST BE SUBMITTED TO THE LOCAL BUILDING AND SAFETY OFFICE.

   ALL LANDSCAPING REQUIRES A SMART IRRIGATION CONTROLLER. AUTOMATIC IRRIGATION SYSTEM CONTROLLERS FOR LANDSCAPING SHALL BE INSTALLED AT THE TIME OF FINAL INSPECTION AND SHALL COMPLY WITH THE FOLLOWING:

   CONTROLLERS SHALL BE WEATHER OR SOIL MOISTURE BASED CONTROLLERS THAT AUTOMATICALLY ADJUST IRRIGATION IN RESPONSE TO CHANGES IN PLANTS' NEEDS AS WEATHER CONDITIONS CHANGE.

PLANTING AND IRRIGATION NOTES (CONTD.):

b. WEATHER BASED CONTROLLERS WITHOUT INTEGRAL RAIN SENSORS OR COMMUNICATION SYSTEMS THAT ACCOUNT FOR LOCAL RAINFALL SHALL HAVE A SEPARATE WIRED OR WIRELESS RAIN SENSOR WHICH CONNECTS OR COMMUNICATES WITH THE CONTROLLER(S). SOIL MOISTURE BASED CONTROLLERS ARE NOT REQUIRED TO HAVE RAIN SENSOR INPUT. SHOW LOCATION WHERE SMART IRRIGATION CONTROLLER IS TO BE INSTALLED AND LABEL MANUFACTURER NAME AND MODEL NUMBER.

PRIVATE / UTILITY EASEMENT:

WEATHER BASED CONTROLLERS WITHOUT INTEGRAL RAIN SENSORS OR COMMUNICATION SYSTEMS THAT ACCOUNT FOR LOCAL RAINFALL SHALL HAVE A SEPARATE WIRED OR WIRELESS RAIN SENSOR WHICH CONNECTS OR COMMUNICATES WITH THE CONTROLLER(S). SOIL MOISTURE BASED CONTROLLERS ARE NOT REQUIRED TO HAVE RAIN SENSOR INPUT. SHOW LOCATION WHERE SMART IRRIGATION CONTROLLER IS TO BE INSTALLED AND LABEL MANUFACTURER NAME AND MODEL NUMBER.

STORMWATER POLLUTION PREVENTION PLAN /WET WEATHER EROSION CONTROL GENERAL NOTES:

1. EVERY EFFORT SHOULD BE MADE TO ELIMINATE THE DISCHARGE OF NON-STORM WATER FROM THE PROJECT SITE AT ALL TIMES.

2. ERODED SEDIMENTS AND OTHER POLLUTANTS MUST BE RETAINED ON-SITE AND MAY NOT BE TRANSPORTED FROM THE SITE VIA SHEET FLOW, SWALES, AREA DRAINS, NATURAL DRAINAGE COURSES, OR WIND.

3. STOCKPILES OF EARTH AND OTHER CONSTRUCTION-RELATED MATERIALS MUST BE PROTECTED FROM BEING TRANSPORTED FROM THE SITE BY THE FORCES OF WIND OR WATER.

4. FUELS, OILS, SOLVENTS AND OTHER TOXIC MATERIALS MUST BE STORED IN ACCORDANCE WITH THEIR LISTING AND ARE NOT TO CONTAMINATE THE SOILS AND SURFACE WATERS. ALL APPROVED STORAGE CONTAINERS ARE TO BE PROTECTED FROM THE WEATHER. SPILLS MUST BE CLEANED UP IMMEDIATELY AND DISPOSED OF IN A PROPER MANNER. SPILLS MAY NOT BE WASHED INTO THE DRAINAGE SYSTEM.

5. EXCESS OF WASTE CONCRETE MAY NOT BE WASHED INTO THE PUBLIC WAY OR ANY OTHER DRAINAGE SYSTEM. PROVISIONS SHALL BE MADE TO RETAIN CONCRETE WASTES ON-SITE UNTIL THEY CAN BE DISPOSED OF AS SOLID WASTES.

6. TRASH AND CONSTRUCTION-RELATED SOLID WASTES MUST BE DEPOSITED INTO A COVERED RECEPTACLE TO PREVENT CONTAMINATION OF RAINWATER AND DISPERSAL BY WIND.

7. SEDIMENTS AND OTHER MATERIALS MAY NOT BE TRACKED FROM THE SITE BY VEHICLE TRAFFIC. THE CONSTRUCTION ENTRANCE ROADWAYS MUST BE STABILIZED SO AS TO INHIBIT SEDIMENTS FROM BEING DEPOSITED INTO THE PUBLIC WAY. ACCIDENTAL DEPOSITIONS MUST BE SWEPT UP IMMEDIATELY AND MAY NOT BE WASHED DOWN BY RAIN OR OTHER MEANS.

8. ANY SLOPES WITH THE DISTURBED SOILS OR DENUDED OF VEGETATION MUST BE STABILIZED SO AS TO INHIBIT EROSION BY WIND AND WATER.

9. THE FOLLOWING NOTES MUST BE ON THE PLAN (OR SUBMITTED AS A SEPARATE DOCUMENT – PRIOR TO PLAN APPROVAL).

   AS THE OWNER OR AUTHORIZED AGENT OF THE OWNER, "I CERTIFY THAT THIS DOCUMENT AND ALL ATTACHMENTS WERE PREPARED UNDER MY DIRECTION OR SUPERVISION IN ACCORDANCE WITH A SYSTEM DESIGNED TO ASSURE THAT QUALIFIED PERSONNEL PROPERLY GATHER AND EVALUATE THE INFORMATION SUBMITTED. BASED ON MY INQUIRY OF THE PERSON OR PERSONS WHO MANAGE THE SYSTEM OR THOSE PERSONS DIRECTLY RESPONSIBLE FOR GATHERING THE INFORMATION, TO THE BEST OF MY KNOWLEDGE AND BELIEF, THE INFORMATION SUBMITTED IS TRUE, ACCURATE, AND COMPLETE. I AM AWARE THAT SUBMITTING FALSE AND/OR INACCURATE INFORMATION, FAILING TO UPDATE THE LOCAL SWPPP TO REFLECT CURRENT CONDITIONS, OR FAILING TO PROPERLY AND/OR ADEQUATELY IMPLEMENT THE LOCAL SWPPP MAY RESULT IN REVOCATION OF GRADING AND/OR OTHER PERMITS OR OTHER SANCTIONS PROVIDED BY LAW."

______________________________ ____________

OWNER OR AUTHORIZED AGENT OF THE OWNER DATE

THE FOLLOWING BMP'S AS OUTLINED IN, BUT NOT LIMITED TO, THE CALIFORNIA STORMWATER BEST MANAGEMENT PRACTICES HANDBOOK, JANUARY 2003, OR THE LATEST REVISED EDITION, MAY APPLY DURING THE CONSTRUCTION OF THIS PROJECT (ADDITIONAL MEASURES MAY BE REQUIRED IF DEEMED APPROPRIATE BY COUNTY INSPECTORS)

EROSION CONTROL

EC1 – SCHEDULING
EC2 – PRESERVATION OF EXISTING VEGETATION
EC3 – HYDRAULIC MULCH
EC4 – HYDROSEEDING
EC5 – SOIL BINDERS
EC6 – STRAW MULCH
EC7 – GEOTEXTILES & MATS
EC8 – WOOD MULCHING
EC9 – EARTH DIKES AND DRAINAGE SWALES
EC10 – VELOCITY DISSIPATION DEVICES
EC11 – SLOPE DRAINS
EC12 – STREAMBANK STABILIZATION
EC13 – POLYACRYLAMIDE

TEMPORARY SEDIMENT CONTROL

SE1 – SILT FENCE
SE2 – SEDIMENT BASIN
SE3 – SEDIMENT TRAP
SE4 – CHECK DAM
SE5 – FIBER ROLLS
SE6 – GRAVEL BAG BERM
SE7 – STREET SWEEPING AND VACUUMING
SE8 – SANDBAG BARRIER
SE9 – STRAW BALE BARRIER
SE10 – STORM DRAIN INLET PROTECTION

WIND EROSION CONTROL

WE1 – WIND EROSION CONTROL

EQUIPMENT TRACKING CONTROL

TC1 – STABILIZED CONSTRUCTION ENTRANCE EXIT
TC2 – STABILIZED CONSTRUCTION ROADWAY
TC3 – ENTRANCE/OUTLET TIRE WASH

NON-STORMWATER MANAGEMENT

NS1 – WATER CONSERVATION PRACTICES
NS2 – DEWATERING OPERATIONS
NS3 – PAVING AND GRINDING OPERATIONS
NS4 – TEMPORARY STREAM CROSSING
NS5 – CLEAR WATER DIVERSION
NS6 – ILLICIT CONNECTION/DISCHARGE
NS7 – POTABLE WATER/IRRIGATION
NS8 – VEHICLE AND EQUIPMENT CLEANING
NS9 – VEHICLE AND EQUIPMENT FUELING
NS10 – VEHICLE AND EQUIPMENT MAINTENANCE
NS11 – PILE DRIVING OPERATIONS
NS12 – CONCRETE CURING
NS13 – CONCRETE FINISHING
NS14 – MATERIAL AND EQUIPMENT USE
NS15 – DEMOLITION ADJACENT TO WATER
NS16 – TEMPORARY BATCH PLANS

WASTE MANAGEMENT & MATERIAL POLLUTION CONTROL

WM1 – MATERIAL DELIVERY AND STORAGE
WM2 – MATERIAL USE
WM3 – STOCKPILE MANAGEMENT
WM4 – SPILL PREVENTION AND CONTROL
WM5 – SOLID WASTE MANAGEMENT
WM6 – HAZARDOUS WASTE MANAGEMENT
WM7 – CONTAMINATION SOIL MANAGEMENT
WM8 – CONCRETE WASTE MANAGEMENT
WM9 – SANITARY/SEPTIC WASTE MANAGEMENT
WM10 – LIQUID WASTE MANAGEMENT

LEGEND OF ABBREVIATIONS

A.C.	ASBESTOS CEMENT	N	NORTH
AD	AREA DRAIN	PL	PROPERTY LINE
BLDG	BUILDING	PVC	POLYVINYL CHLORIDE
CB	CATCH BASIN	S	SEWER
CO	CLEAN OUT	SCH	SCHEDULE
DS	DOWNSPOUT	SD	STORM DRAIN
E	EAST	SMH	SEWER MANHOLE
FF	FINISHED FLOOR	TELE	TELEPHONE PULLBOX
FG	FINISHED GRADE	TW	TOP OF WALL
FH	FIRE HYDRANT	TYP	TYPICAL
FL	FLOW LINE	W	WATER
FS	FINISH SURFACE	WM	WATER METER
GB	GRADE BREAK	LP	LOW POINT
HP	HIGH POINT	MB	MAIL BOX
INV	INVERT		

LEGEND OF SYMBOLS

FIRE HYDRANT
WOOD/WROUGHT IRON FENCE
CUT/FILL LINE
RETAINING WALL
GARDEN WALL
WATER METER, PULLBOX OR VAULT
CENTERLINE
PROPERTY LINE
CURB LINE
DAYLIGHT LINE
SANITARY SEWER
DOMESTIC WATER
EXISTING CONTOURLINE
PROPOSED CONTOURLINE
FLOW LINE

VICINITY MAP

N.T.S.

LEGAL DESCRIPTION

THAT PORTION OF THE NORTHEAST QUARTER OF SECTION4, TOWNSHIP 1 SOUTH, RANGE 17 WEST SAN BERNARDINO MERIDIAN IN THE COUNTY OF LOS ANGELES ACCORDING TO THE OFFICIAL PLAT OF SAID LAND, BOUNDED WESTERLY BY THE EASTERLY LINE OF MULHOLLAND HIGHWAY, AS DESCRIBED IN THE DEED TO THE COUNTY OF LOS ANGELES RECORDED NOVEMBER 4, 1954, AS INSTRUMENT NO. 3854 IN BOOK 46021 PAGE 364 OFFICIAL RECORDS.

PROJECT INFORMATION

GENERAL INFORMATION:

PROJECT SITE ADDRESS:	24604 MULHOLLAND HWY, CALABASAS, CA 91302. TRACT NO. 26500 LOT NO. 121
PROPERTY OWNER:	ANAT ZANZURI
ASSESSOR'S ID NO.:	4455-042-015
GRADING PLAN CHECK NO.:	GR 1312050001
EARTHWORK VOLUMES:	3213 CYDS (CUT) 237 CYDS (FILL) 2976 CYDS (EXPORT) EXPORT LOCATION: TO BE TAKEN TO LANDFILL OR GRADING CONTRACTOR
TOTAL DISTURBED AREA:	28,322 SQFT (0.65 ACRES)
PRE-DEVELOPMENT:	IMPERVIOUS AREA 0 SQFT (0 ACRES)
POST-DEVELOPMENT:	IMPERVIOUS AREA 28,322 SQFT (0.65 ACRES)
% DROUGHT TOLERANT PLANTS:	__% ____ SF ___ (ACRES)
% TURF AREA:	__% ____ SF ___ (ACRES)
CONSTRUCTION & DEMOLITION DEBRIS RECYCLING AND REUSE PLAN (RRP ID):	011714-1000 EXPIRY : OCTOBER 2014 CONTACT EVE LOPES AT (626)458-6552 LA COUNTY ENVIRONMENTAL PROGRAMS DIVISION
LANDFILL SITES:	MIXED DEBRIS: THE RECLAIMER 18800 ERWIN ST, TARZANA, CA 91335 PHONE: (818) 909-0911 INERT DEBRIS: CALABASAS LANDFILL 5300 LOST HILLS ROAD, AGOURA HILLS, CA 91301. PHONE: (818) 991-4335 PHONE: (818) 991-4335

ZONING AND REGIONAL PLANNING INFORMATION:

PROPERTY ZONING:	R-1
INTENDED LAND USE:	SINGLE FAMILY RESIDENCE
PROPOSED LANDSCAPE AREA:	9000 SQFT (0.21 ACRES)
CALIFORNIA COASTAL COMMISSION AREA:	YES APPROVED VOLUME: ___________(CYDS)
COASTAL DEVELOPMENT PERMIT CDP:	______________ EXPIRATION DATE: ___________

BENCHMARK

B.M. NO. L.A.C.R.D CY5352 ELEV.1058.431 R.D.B.M. TAG IN N. ROCK & CONC. WALL OF DRAIN 18 FT. W C/L MULHOLLAND HWY 50 FT. S DRWY. TO HSE. NO. 24745 0.15 MI. SLY INT. DRY CANYON-COLD CREEK RD. 9 FT. S/O PP. NO. 1090729E 0.15 MI N/O STUNT RD. MALIBU QUAD. 1980.

SOILS ENGINEER'S/GEOLOGIST STATEMENTS

PREPARED BY: – GEOSOILS CONSULTANTS, INC.
6634 VALJEAN AVENUE
VAN NUYS, CA 91406
PHONE: 818-785-2158 EXT.221

THIS PLAN IS ACCEPTABLE WITH REGARDS TO SOILS AND GEOLOGIC CONDITIONS AND CONFORMS TO THE RECOMMENDATIONS OF THE REPORT UPDATED 12/02/2013 BY GEOSOILS CONSULTANTS INC. REFERENCE WO# 2816A

____________ DATE

SUSAN M. BERGER CEG 2069

DISCLAIMER

UNAUTHORIZED CHANGES & USES: THE ENGINEER PREPARING THESE PLANS WILL NOT BE RESPONSIBLE FOR, OR LIABLE FOR, UNAUTHORIZED CHANGES TO OR USES OF THESE PLANS. ALL CHANGES TO THE PLANS MUST BE IN WRITING AND MUST BE APPROVED BY THE PREPARER OF THESE PLANS.

CONTRACTOR NOTE

CONSTRUCTION CONTRACTOR AGREES THAT IN ACCORDANCE WITH GENERALLY ACCEPTED CONSTRUCTION PRACTICES, CONSTRUCTION CONTRACTOR WILL BE REQUIRED TO ASSUME SOLE AND COMPLETE RESPONSIBILITY FOR JOB SITE CONDITIONS DURING THE COURSE OF CONSTRUCTION OF THE PROJECT, INCLUDING SAFETY OF ALL PERSONS AND PROPERTY; THAT THIS REQUIREMENT SHALL BE MADE TO APPLY CONTINUOUSLY AND NOT TO BE LIMITED TO NORMAL WORKING HOURS, AND CONSTRUCTION CONTRACTOR FURTHER AGREES TO DEFEND, INDEMNIFY AND HOLD DESIGN PROFESSIONAL HARMLESS FROM ANY AND ALL LIABILITY, REAL OR ALLEGED, IN CONNECTION WITH THE PERFORMANCE OF WORK ON THIS PROJECT, EXCEPTING LIABILITY RISING FROM THE SOLE NEGLIGENCE OF DESIGN PROFESSIONAL.

ESTIMATED START DATE: AUG. 1, 2014
ESTIMATED COMPLETION DATE: SEPT. 30, 2014

Underground Service Alert

CALL BEFORE YOU DIG

Call: TOLL FREE
1-800-422-4133

TWO WORKING DAYS BEFORE YOU DIG

NO.	DESCRIPTION	DATE

TITLE: 24604 MULHOLLAND HWY
CALABASAS, CA 91302
COUNTY OF LOS ANGELES

PREPARED FOR: N. ZEEV ZANZURI

JNA General Contractors Lic. # 997143
5900 Canoga Ave. # 450
Woodland hills, CA 91367
PHONE 818.475.2006
FAX 818-475-2004

JNA

SHEET:

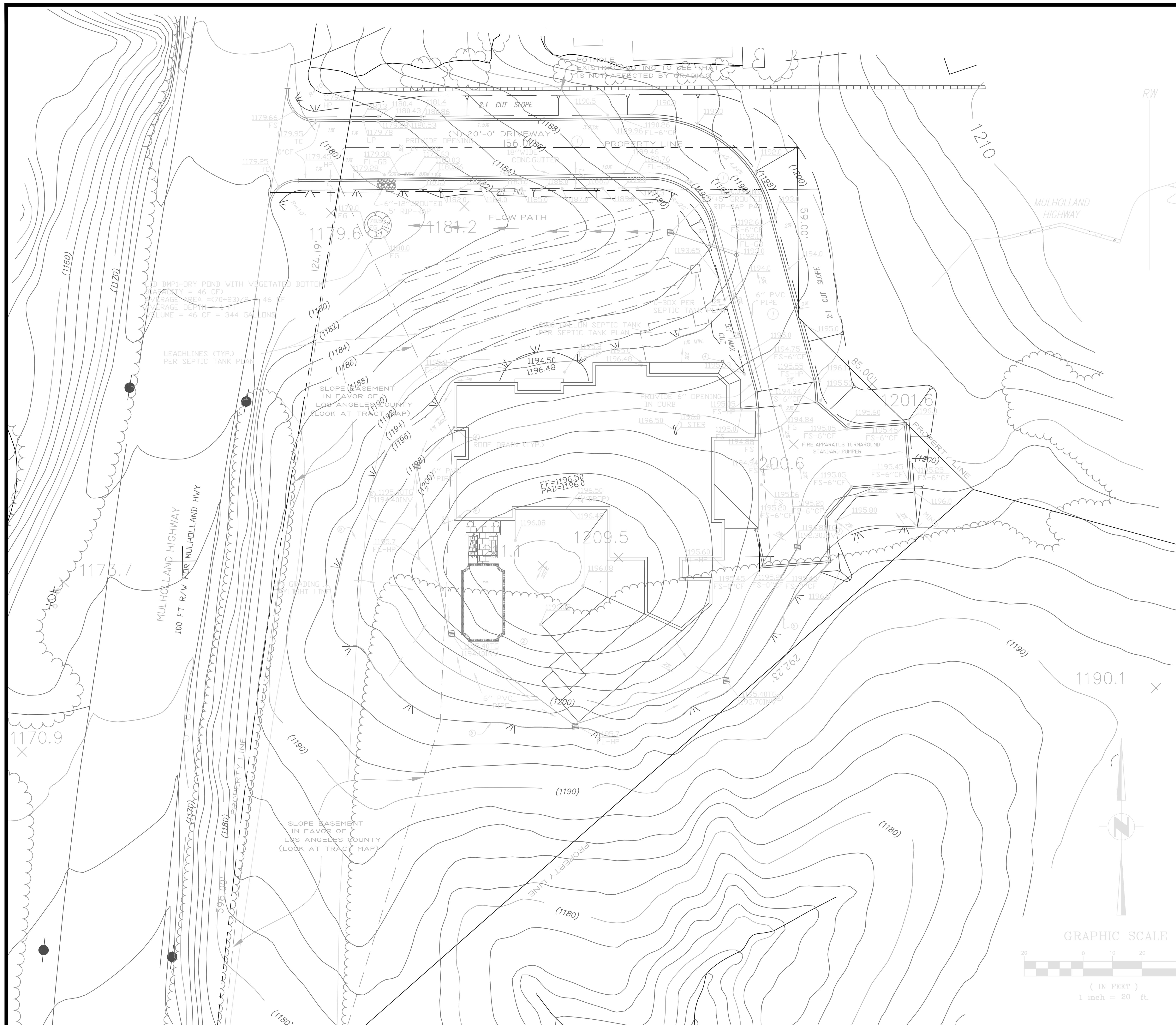

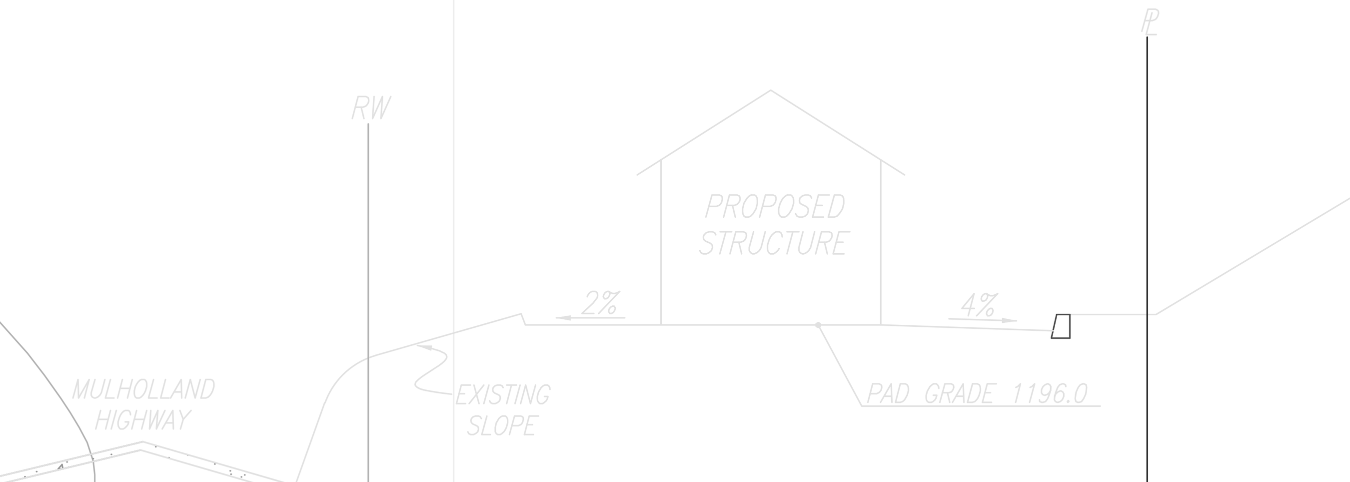

SECTION B-B

NOT TO SCALE

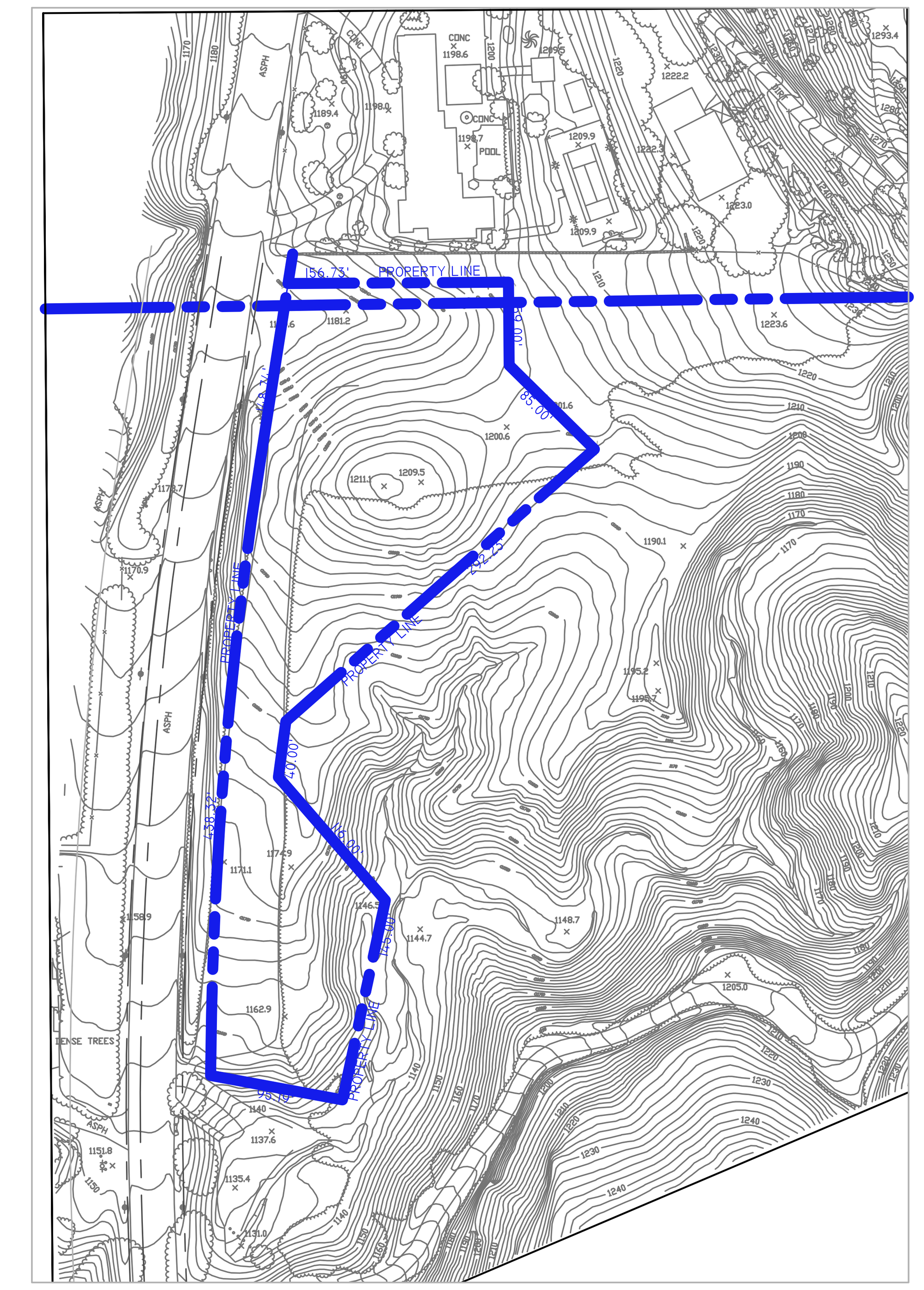

SITE INDEX MAP

SCALE = 1:100

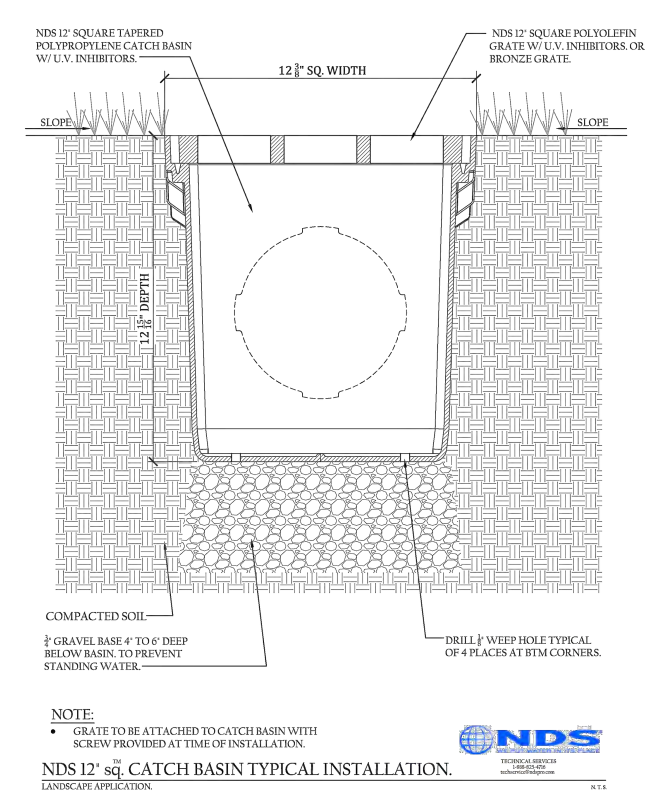

(A) CATCH BASIN DETAIL

NOT TO SCALE

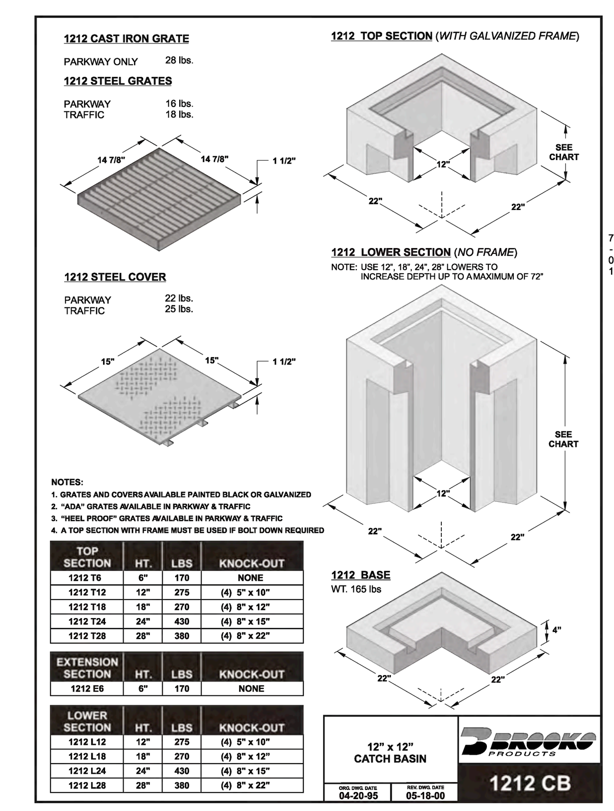

NOTES:
1. GRATES AND COVERS AVAILABLE PAINTED BLACK OR GALVANIZED
2. "ADA" GRATES AVAILABLE IN PARKWAY & TRAFFIC
3. "HEEL PROOF" GRATES AVAILABLE IN PARKWAY & TRAFFIC
4. A TOP SECTION WITH FRAME MUST BE USED IF BOLT DOWN REQUIRED

TOP SECTION	HT.	LBS	KNOCK-OUT
1212 T6	6"	170	NONE
1212 T12	12"	275	(4) 5" x 10"
1212 T18	18"	270	(4) 8" x 12"
1212 T24	24"	430	(4) 8" x 15"
1212 T28	28"	380	(4) 8" x 22"

EXTENSION SECTION	HT.	LBS	KNOCK-OUT
1212 E6	6"	170	NONE

LOWER SECTION	HT.	LBS	KNOCK-OUT
1212 L12	12"	275	(4) 5" x 10"
1212 L18	18"	270	(4) 8" x 12"
1212 L24	24"	430	(4) 8" x 15"
1212 L28	28"	380	(4) 8" x 22"

12" x 12" CATCH BASIN

BROOKS PRODUCTS

ORG. DWG. DATE 04-20-95 | REV. DWG. DATE 05-18-00

1212 CB

(B) CATCH BASIN DETAIL

NOT TO SCALE

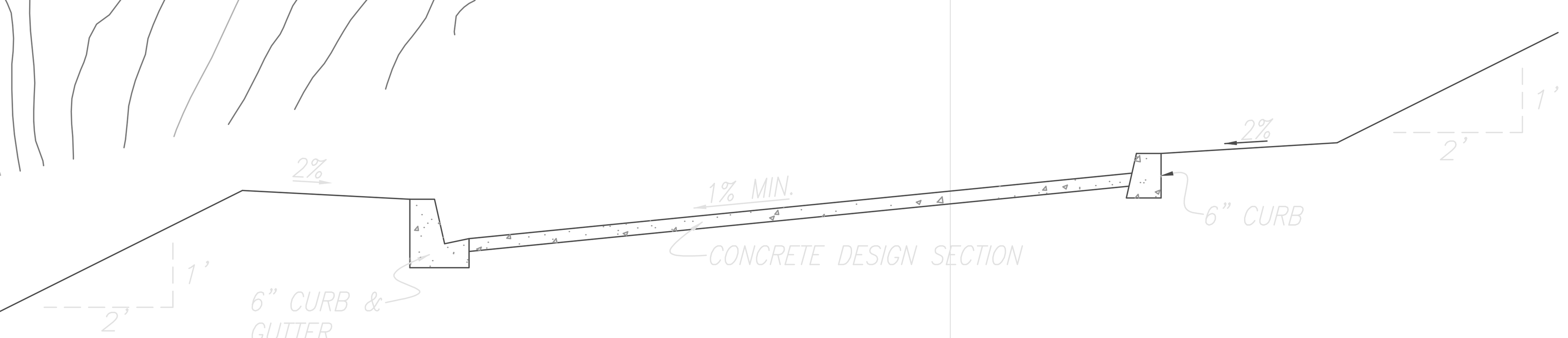

SECTION A-A : TYPICAL DRIVEWAY SECTION

NOT TO SCALE

SECTION C-C : BERM DETAIL

NOT TO SCALE

NOTES:

1. CONCRETE DRIVEWAY (SECTION TO BE DETERMINED BY SOILS ENGINEER).
2. PROVIDE NDS 12"X12" CATCH BASIN OR EQUIVALENT PER DETAIL A .
3. PROVIDE BROOKS 12"X12" CONCRETE GRATING BASIN WITH TRAFFIC GRATE OR EQUIVALENT PER DETAIL B.
4. ROOF DRAINS TO TIE INTO DRAINAGE SYSTEM OR OUTLET TO CONCRETE GUTTER AS SHOWN.
5. CONSTRUCT BERM PER DETAIL C.

Underground Service Alert

CALL BEFORE YOU DIG

Call: TOLL FREE 1-800-422-4133

24604 Grading.dwg

1/15/2004

NO.	DESCRIPTION	DATE

TITLE: 24604 MULHOLLAND HWY CALABASAS, CA 91302 COUNTY OF LOS ANGELES

PREPARED FOR: N. ZEEV ZANZURI

JNA General Contractors Lic. # 997143
5900 Canoga Ave. # 450
Woodland hills, CA 91367
PHONE 818.475.2006
FAX 818-475-2004

JNA

SHEET:

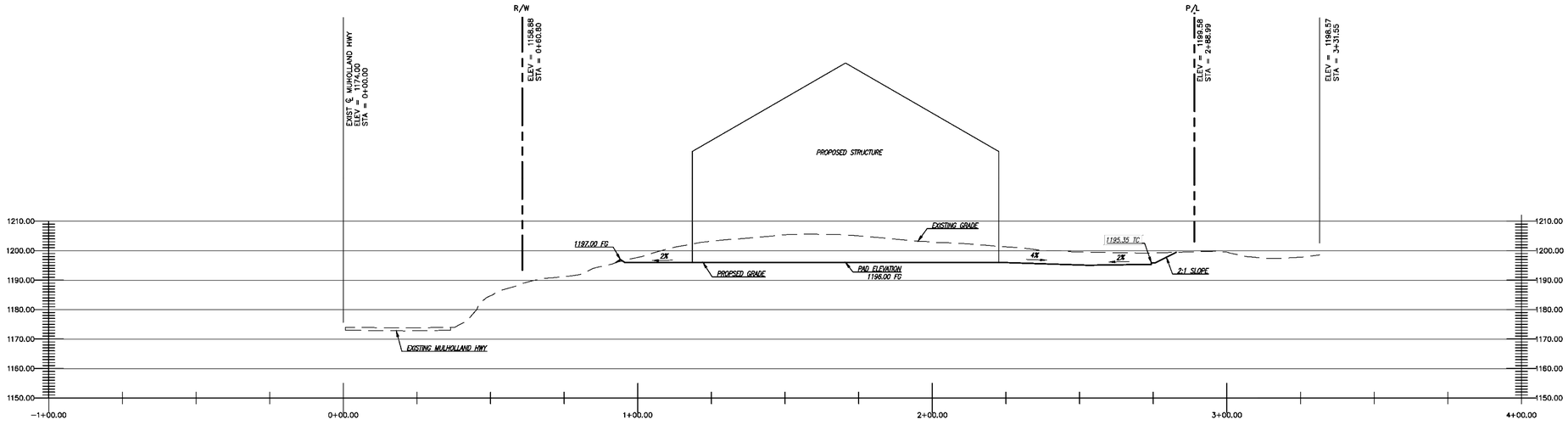

SECTION B-B

GRAPHIC SCALE

(IN FEET)
1 inch = 20 ft.

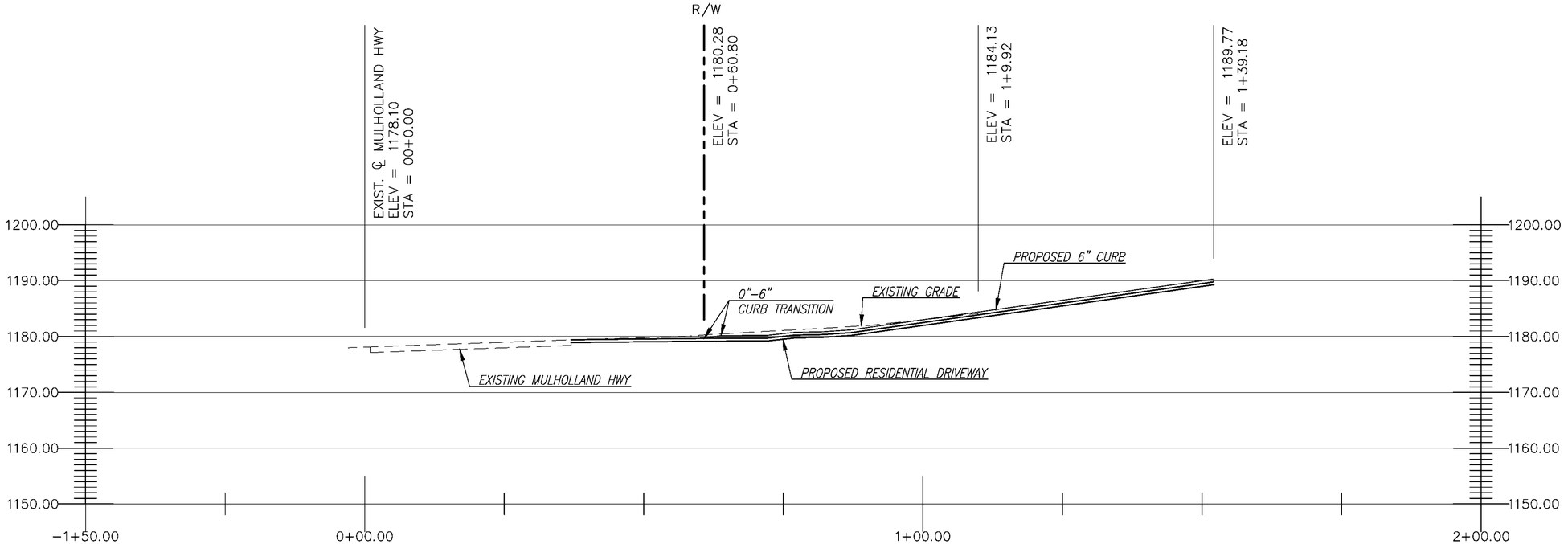

SECTION D-D

GRAPHIC SCALE

(IN FEET)
1 inch = 10 ft.

Underground Service Alert
Call TOLL FREE
1-800-422-4133

NO.	DESCRIPTION	DATE

TITLE:
24604 MULHOLLAND HWY
CALABASAS, CA 91302
COUNTY OF LOS ANGELES

PREPARED FOR:
N. ZEEV ZANZURI

JNA General Contractors Lic. # 997143
5900 Canoga Ave. # 450
Woodland hills, CA 91367
PHONE 818.475.2006
FAX 818-475-2004

JNA

SHEET: