DARK FIBER

verizon wireless

SITE NAME: SCL FAIRGREEN A1

MTX – 49
S/S/O 2545 S. GRAYDON AVE. – R.O.W.
MONROVIA, CA 91016
NEW ATC POLE

SHEET INDEX

SHEET	DESCRIPTION
T–1	TITLE SHEET
T–2	GENERAL NOTES & SPECIFICATIONS
S–1	SURVEY
A–1	SITE PLAN
A–2	ENLARGED SITE PLAN
A–3	ELEVATIONS
A–4	POLE & EQUIPMENT DETAILS
A–5	MYERS DETAILS
A–6	GROUNDING DETAILS

UNDERGROUND SERVICE ALERT OF SOUTHERN CALIFORNIA
Call: TOLL FREE
811
TWO WORKING DAYS BEFORE YOU DIG

CONTRACTOR NOTES

DO NOT SCALE DRAWINGS

CONTRACTOR SHALL VERIFY ALL PLANS AND EXIST. DIMENSIONS AND CONDITIONS ON THE JOB SITE AND SHALL IMMEDIATELY NOTIFY THE ARCHITECT AND/OR ENGINEERS IN WRITING OF ANY DISCREPANCIES BEFORE PROCEEDING WITH THE WORK OR BE RESPONSIBLE FOR SAME.

THOMAS GUIDE:
REGION: LOS ANGELES
PAGE: 597
GRID #: G1

POWER/TELCO UTILITY CONTACTS

POWER:
COMPANY: SCE
CONTACT: LESTER CARTER
T&D–NEW DEVELOPMENT
PROJECT MANAGER
PHONE: 909–873–7930

TELCO:
COMPANY: TBD
CONTACT: N/A
PHONE: N/A

PROJECT DESCRIPTION

VERIZON WIRELESS TO INSTALL NEW 40' CLASS 3 POLE & (1) CSS CYL–XYCAP–2–T ANTENNA, (2) RRUS–12'S W/ (2) PSU'S UNITS ON NEW POLE. VERIZON WIRELESS TO PLACE (1) PULL–BOX & (1) MYERS ELECTRICAL METER PEDESTAL.

LATITUDE: 34° 7' 6.94" N **LONGITUDE:** 118° 0' 16.69" W

VICINITY MAP

CONSULTING TEAM

ENGINEERING COMPANY:
CORE DEVELOPMENT SERVICES
28310 ROADSIDE DR. SUITE 220
AGOURA HILLS, CA 91310
CONTACT: HOLLIE VILLEGAS
PHONE: (714) 319–3170

PLANNING CONSULTANT:
N/A

LAND SURVEYOR:
BERT HAZE
LAND SURVEYING & MAPPING
3188 AIRWAY AVENUE, SUITE K1
COSTA MESA, CA 92626
CONTACT: BERT HAZE
PHONE: (714) 557–1567

STRUCTURAL ENGINEER:
N/A

PROJECT INFORMATION

PROPERTY OWNER:
PUBLIC RIGHT OF WAY

APPLICANT:
VERIZON WIRELESS
15505 SAND CANYON AVE.
BLDG. D. FIRST FLOOR
IRVINE, CA 92618
CONTACT: SITE DEVELOPMENT
PHONE: (949) 286–7000

ZONING:
CORE DEVELOPMENT SERVICES
2749 SATURN ST.
BREA, CA 92821
CONTACT: ARGINEH MAILIAN
PHONE: (714) 904–9311

ENGINEERING:
CORE DEVELOPMENT SERVICES
2749 SATURN ST.
BREA, CA 92821
CONTACT: PETER CASTANEDA
PHONE: (714) 315–1625

APN#
8510–024–011

JURISDICTION
COUNTY OF LOS ANGELES
REGIONAL PLANNING
300 W. TEMPLE ST.,
LOS ANGELES, CA 90012–3225
(213) 974–6470

APPROVAL

THE FOLLOWING PARTIES HEREBY APPROVE AND ACCEPT THESE DOCUMENTS AND AUTHORIZE THE CONTRACTOR TO PROCEED WITH THE CONSTRUCTION DESCRIBED HEREIN.

ALL CONSTRUCTION DOCUMENTS ARE SUBJECT TO REVIEW BY THE LOCAL BUILDING DEPARTMENT AND ANY CHANGES AND MODIFICATIONS THEY MAY IMPOSE.

	PRINT NAME	SIGNATURE	DATE
LANDLORD			
VERIZON MANAGER			
RF MANAGER			
SITE ACQUISITION			
AEC			
PLANNER			

A&E DEVELOPMENT

core
DEVELOPMENT SERVICES
A&E SERVICES
2749 Saturn Street
Brea, California 92821
(714)729-8404 (714)333-4441 fax
www.core.us.com

PROPRIETARY INFORMATION

THE INFORMATION CONTAINED IN THIS SET OF CONSTRUCTION DOCUMENTS IS PROPRIETARY BY NATURE. ANY USE OR DISCLOSURE OTHER THAN THAT WHICH RELATES TO VERIZON WIRELESS IS STRICTLY PROHIBITED.

SITE BUILDER

verizon wireless
15505 SAND CANYON AVENUE
BLDG. D, FIRST FLR.
IRVINE, CALIFORNIA 92618
949.286.7000

SITE INFORMATION

SITE NAME:
SCL FAIRGREEN A1
R.O.W.

SITE ADDRESS

S/S/O
2545 S. GRAYDON AVE.,
MONROVIA, CA 91016

100% ZD'S

DATE: 06/22/14
ENGINEERED BY: CORE DEVELOPMENT SERVICES
DRAFTED BY: CORE DEVELOPMENT SERVICES

REVISIONS

REV	DESCRIPTION	DATE/BY
0	ISSUED FOR REVIEW	06/22/14 LO
1	90% ZD'S	07/30/14 LO
2	100% ZD'S	10/10/14 LR

STAMP

SHEET TITLE

TITLE SHEET

SHEET NUMBER

T–1

SYMBOL	DESCRIPTION
E.O.D.	EDGE OF DIRT
W/L	WHITE LINE
R.O.W.	RIGHT OF WAY
E.O.P.	EDGE OF PAVEMENT
C/L	CENTER LINE
C/F	CURBFACE
P/L	PROPERTY LINE
—X—X—X—X—X—	FENCE
	WALL
	DRIVEWAY
	BUSHES
	TREE
	UTILITY POLE
	SITE POLE
	STREET LIGHT
	PARKING METER/STREET SIGN
	DOWN GUY
	FIRE HYDRANT
	UTILITY VALVE
	UTILITY MANHOLE
	SEWER MANHOLE
	SQUARE VENT
	ROUND VENT
	DIG-ALERTS
	HANDICAP RAMP

ABBREVIATIONS AND SYMBOLS | 1

GENERAL NOTES AND CONDITIONS

INTENT

1. THESE CONSTRUCTION DRAWINGS DESCRIBE THE WORK TO BE DONE & THE MATERIALS TO BE FURNISHED FOR CONSTRUCTION.
2. THE INTENTION OF THE DOCUMENTS IS TO INCLUDE ALL LABOR AND MATERIALS REASONABLY NECESSARY FOR THE PROPER EXECUTION AND COMPLETION OF THE WORK AS STIPULATED IN THE CONTRACT.
3. THE PURPOSE OF THE SPECIFICATIONS IS TO INTERPRET THE INTENT OF THE DRAWINGS AND TO DESIGNATE THE METHOD OF THE PROCEDURE, TYPE AND QUALITY OF MATERIALS REQUIRED TO COMPLETE THE WORK.
4. MINOR DEVIATIONS FROM THE DESIGN LAYOUT ARE ANTICIPATED AND SHALL BE CONSIDERED AS PART OF THE WORK. NO CHANGES THAT ALTER THE CHARACTER OF THE WORK WILL BE MADE OR PERMITTED BY THE OWNER WITHOUT ISSUING A CHANGE ORDER.

CONFLICTS

1. THE CONTRACTOR SHALL BE RESPONSIBLE FOR VERIFICATION OF ALL MEASUREMENTS AT THE SITE BEFORE ORDERING ANY MATERIALS OR DOING ANY WORK. NO EXTRA CHARGE OR COMPENSATION SHALL BE ALLOWED DUE TO DIFFERENCE BETWEEN ACTUAL DIMENSIONS AND DIMENSIONS INDICATED IN THE CONSTRUCTION DRAWINGS. ANY SUCH DISCREPANCY IN DIMENSIONS WHICH MAY BE FOUND SHALL BE SUBMITTED TO THE OWNER FOR CONSIDERATION BEFORE THE CONTRACTOR PROCEEDS WITH THE WORK IN THE AFFECTED AREAS.
2. THE BIDDER, IF AWARDED THE CONTRACT, WILL NOT BE ALLOWED ANY EXTRA COMPENSATION BY REASON OF ANY MATTER OR THING CONCERNING WHICH SUCH BIDDER MIGHT HAVE FULLY INFORMED THEMSELVES PRIOR TO THE BIDDING.
3. NO PLEA OF IGNORANCE OF CONDITIONS THAT EXIST, OR OF DIFFICULTIES OR CONDITIONS THAT MAY BE ENCOUNTERED OR OF ANY OTHER RELEVANT MATTER CONCERNING THE WORK TO BE PERFORMED IN THE EXECUTION OF THE WORK WILL BE ACCEPTED AS AN EXCUSE FOR ANY FAILURE OR OMISSION ON THE PART OF THE CONTRACTOR TO FULFILL EVERY DETAIL OF ALL THE REQUIREMENTS OF THE CONTRACT DOCUMENTS GOVERNING THE WORK.

WARRANTIES & BONDS

1. CONTRACTOR IS RESPONSIBLE FOR APPLICATION AND PAYMENT OF CONTRACTOR LICENSES AND BONDS.
2. SEE MASTER CONTRACTION SERVICES AGREEMENT FOR ADDITIONAL DETAILS.

STORAGE

1. ALL MATERIALS MUST BE STORED IN A LEVEL AND DRY FASHION AND IN A MANNER THAT DOES NOT NECESSARILY OBSTRUCT THE FLOW OF OTHER WORK.
2. BTS CABINETS MUST BE STORED INSIDE UNTIL THERE IS POWER ON SITE.
3. STORAGE METHOD MUST MEET ALL RECOMMENDATIONS OF THE ASSOCIATED MANUFACTURER.

RELATED DOCUMENTS AND COORDINATION

1. GENERAL CONSTRUCTION, ELECTRICAL AND ANTENNA DRAWINGS ARE INTERRELATED. IN PERFORMANCE OF THE WORK, THE CONTRACTOR MUST REFER TO ALL DRAWINGS. ALL COORDINATION SHALL BE THE RESPONSIBILITY OF THE CONTRACTOR.

CHANGE ORDER PROCEDURE

1. CHANGE ORDERS MAY BE INITIATED BY THE OWNER AND/OR THE CONTRACTOR INVOLVED. THE CONTRACTOR, UPON VERBAL REQUEST FROM THE OWNER SHALL PREPARE A WRITTEN PROPOSAL DESCRIBING THE CHANGE IN WORK OR MATERIALS AND ANY CHANGES IN THE CONTRACT AMOUNT AND PRESENT TO THE OWNER WITHIN 72 HRS FOR APPROVAL. SUBMIT REQUESTS FOR SUBSTITUTIONS IN THE FORM AND IN ACCORDANCE WITH PROCEDURES REQUIRED FOR CHANGE ORDER PROPOSALS. ANY CHANGES IN THE SCOPE OF WORK OR MATERIALS WHICH ARE PERFORMED BY THE CONTRACTOR WITHOUT A WRITTEN CHANGE ORDER AS DESCRIBED & APPROVED BY THE OWNER SHALL PLACE FULL RESPONSIBILITY OF THESE ACTIONS ON THE CONTRACTOR.

SHOP DRAWINGS

1. CONTRACTOR SHALL SUBMIT SHOP DRAWINGS AS REQUIRED AND LISTED IN THESE DRAWINGS TO THE OWNER FOR APPROVAL.
2. ALL SHOP DRAWINGS SHALL BE REVIEWED, CHECKED AND CORRECTED BY CONTRACTOR PRIOR TO SUBMITTAL TO THE OWNER.

PRODUCTS & SUBSTITUTIONS

1. SUBMIT 3 COPIES OF EACH REQUEST FOR SUBSTITUTION. IN EACH REQUEST IDENTIFY THE PRODUCT OR FABRICATION OR INSTALLATION METHOD TO BE REPLACED BY THE SUBSTITUTION INCLUDE RELATED SPECIFICATION SECTION AND DRAWING NUMBERS AND COMPLETE DOCUMENTATION SHOWING COMPLIANCE WITH THE REQUIREMENTS FOR SUBSTITUTIONS.
2. SUBMIT ALL NECESSARY PRODUCT DATA AND CUT SHEETS WHICH PROPERLY INDICATE AND DESCRIBE THE ITEMS, PRODUCTS & MATERIALS BEING INSTALLED. THE CONTRACTOR SHALL, IF DEEMED NECESSARY BY THE OWNER SUBMIT ACTUAL SAMPLES TO THE OWNER FOR APPROVAL IN LIEU OF CUT SHEETS.

CODE COMPLIANCE

1. ALL WORK SHALL BE IN ACCORDANCE WITH APPLICABLE LOCAL, STATE AND FEDERAL REGULATIONS. THESE SHALL INCLUDE BUT NOT BE LIMITED TO THE LATEST VERSION OF THE FOLLOWING:

   2010 CALIFORNIA BUILDING CODE.
   2008 CALIFORNIA ELECTRICAL CODE.
   2009 CALIFORNIA PLUMBING CODE.
   2010 CALIFORNIA MECHANICAL CODE.
   2010 CALIFORNIA CODE OF REGULATIONS.
   FOR ENERGY CONSERVATION.
   G095/G0128

INSURANCE AND BONDS

1. CONTRACTOR SHALL AT THEIR OWN EXPENSE CARRY AND MAINTAIN FOR THE DURATION OF THE PROJECT ALL INSURANCE AS REQUIRED AND LISTED.
2. CONTRACTOR SHALL NOT COMMENCE WITH THEIR WORK UNTIL THEY HAVE PRESENTED AN ORIGINAL CERTIFICATE OF INSURANCE STATING ALL COVERAGE'S TO THE OWNER.
3. THE OWNER SHALL BE NAMED AS AN ADDITIONAL INSURED ON ALL POLICIES.
4. REFER TO THE MASTER AGREEMENT FOR REQUIRED INSURANCE LIMITS.

ADMINISTRATION

1. BEFORE THE COMMENCEMENT OF ANY WORK, THE CONTRACTOR WILL ASSIGN A PROJECT MANAGER WHO WILL ACT AS A SINGLE POINT OF CONTACT FOR ALL PERSONNEL INVOLVED IN THIS PROJECT. THIS PROJECT MANAGER WILL BE DEVELOPING A MASTER SCHEDULE FOR THE PROJECT WHICH WILL SUBMITTED TO THE OWNER PRIOR TO THE COMMENCEMENT OF ANY WORK.
2. SUBMIT A BAR TYPE PROGRESS CHART NOT MORE THAN THREE (3) DAYS AFTER THE DATE ESTABLISHED FOR COMMENCEMENT OF THE WORK ON THE SCHEDULE, INDICATING A TIME BAR FOR EACH MAJOR CATEGORY OF WORK TO BE PERFORMED AT THE SITE, PROPERLY SEQUENCED AND COORDINATED WITH OTHER ELEMENTS OF WORK & SHOWING COMPLETION OF THE WORK SUFFICIENTLY IN ADVANCE OF THE DATE ESTABLISHED FOR SUBSTANTIAL COMPLETION OF THE SITE.
3. PRIOR TO COMMENCING CONSTRUCTION, THE OWNER SHALL SCHEDULE AN ON-SITE MEETING WITH ALL MAJOR PARTIES. THIS WOULD INCLUDE (THOUGH NOT LIMITED TO) THE OWNER, PROJECT MANAGER, CONTRACTOR, LAND OWNER REPRESENTATIVE, LOCAL TELEPHONE COMPANY, TOWER ERECTION FOREMAN (IF SUBCONTRACTED).
4. CONTRACTOR SHALL BE EQUIPPED WITH SOME MEANS OF CONSTANT COMMUNICATIONS, SUCH AS A MOBILE PHONE OR A BEEPER. THIS EQUIPMENT WILL NOT BE SUPPLIED BY THE BY THE OWNER, NOR WILL WIRELESS SERVICE BE ARRANGED.
5. DURING CONSTRUCTION, CONTRACTOR MUST ENSURE THAT EMPLOYEES AND SUBCONTRACTORS WEAR HARD HATS AT ALL TIMES. CONTRACTOR WILL COMPLY WITH ALL VERIZON WIRELESS SAFETY REQUIREMENTS IN THEIR AGREEMENT.
6. PROVIDE WRITTEN DAILY UPDATES AND PHOTOGRAPHS OF ON SITE PROGRESS TO THE PROJECT MANAGER VIA E-MAIL.
7. A COMPLETE INVENTORY OF CONSTRUCTION MATERIALS AND EQUIPMENT IS REQUIRED PRIOR TO START OF CONSTRUCTION.
8. NOTIFY THE OWNER / PROJECT MANAGER IN WRITING NO LESS THAN 48 HOURS IN ADVANCE OF CONCRETE POURS, TOWER ERECTIONS, AND EQUIPMENT CABINET PLACEMENTS.
9. CLOSEOUT PACKAGE IS DUE COMPLETE WITH DETAILED TOP PHOTOS UPON SITE PUNCHWALK WITH PROJECT MANAGER (SEE PROJECT MANAGER FOR SAMPLE CLOSEOUT PACKAGE).

CLEAN UP

1. THE CONTRACTOR SHALL AT ALL TIMES KEEP THE SITE FREE FROM ACCUMULATION OF WASTE MATERIALS OR RUBBISH CAUSED BY THEIR EMPLOYEES AT WORK. AT THE COMPLETION OF THE WORK, THEY SHALL REMOVE ALL RUBBISH FROM AND ABOUT THE BUILDING AREA, INCLUDING ALL THEIR TOOLS, SCAFFOLDING AND SURPLUS MATERIALS AND SHALL LEAVE THEIR WORK CLEAN AND READY FOR USE.
2. VISUALLY INSPECT EXTERIOR SURFACES AND REMOVE ALL TRACES OF SOIL, WASTE MATERIALS, SMUDGES & OTHER FOREIGN MATTER.
3. REMOVE ALL TRACES OF SPLASHED MATERIALS FROM ADJACENT SURFACES.
4. IF NECESSARY TO ACHIEVE A UNIFORM DEGREE OF CLEANLINESS, HOSE DOWN THE EXTERIOR OF THE STRUCTURE.

GENERAL NOTES:

1. INDEMNIFICATION CLAUSE: THE CONTRACTOR AGREES AND SHALL;
   ASSUME SOLE AND COMPLETE RESPONSIBILITY OF THE JOBSITE CONDITIONS DURING THE COURSE OF CONSTRUCTION OF THIS PROJECT, INCLUDING THE SAFETY OF ALL PERSONS AND PROPERTIES. THAT THESE REQUIREMENTS SHALL APPLY CONTINUOUSLY AND NOT BE LIMITED TO NORMAL WORKING HOURS AND CONDITIONS. THE CONTRACTOR FURTHER AGREES TO DEFEND INDEMNITY AND HOLD VERIZON WIRELESS, REPRESENTATIVES, AND ENGINEERS HARMLESS FROM ANY AND ALL LIABILITY, REAL OR ALLEGED IN CONNECTION WITH THE PERFORMANCE OF THE WORK ON THIS PROJECT.
2. PRIOR TO THE BEGINNING OF ANY CONSTRUCTION AND THROUGHOUT THE COURSE OF CONSTRUCTION WORK, THE CONTRACTOR SHALL FULLY COMPLY WITH "CALIFORNIA OCCUPATIONAL SAFETY AND HEALTH" ACT OF 1973 INCLUDING ALL REVISIONS AND AMENDMENTS THERETO.
3. ALL WORK SHALL CONFORM TO THE LATEST EDITION OF GO 95, 128, AND THE STANDARD "SPECIFICATIONS FOR PUBLIC WORKS CONSTRUCTION", AS ADOPTED BY THE CITY, COUNTY OR STATE AS MODIFIED BY STANDARD PLANS AND ADDENDUMS.
4. THE EXISTENCE AND LOCATION OF UTILITIES AND OTHER AGENCIES FACILITIES AS SHOWN HEREON ARE OBTAINED BY A SEARCH OF AVAILABLE RECORDS. OTHER FACILITIES MAY EXIST. THE CONTRACTOR SHALL VERIFY PRIOR TO THE START OF CONSTRUCTION AND SHALL USE EXTREME CARE AND PROTECTIVE MEASURES TO PREVENT DAMAGE TO THESE FACILITIES. THE CONTRACTOR IS RESPONSIBLE FOR THE PROTECTION OF ALL UTILITY OR AGENCY FACILITIES WITHIN THE LIMITS OR WORK, WHETHER THEY ARE SHOWN ON THIS PLAN OR NOT.
5. THE CONTRACTOR SHALL NOTIFY UNDERGROUND SERVICE ALERT (800) 227-2600, AT LEAST TWO WORKING DAYS PRIOR TO THE START OF ANY EXCAVATION.
6. THE CONTRACTOR SHALL NOTIFY THE CITY, COUNTY OR STATE ENGINEER INSPECTION DEPARTMENT, (213) 482-7030, AT LEAST TWO DAYS BEFORE START OF ANY WORK REQUIRING THEIR INVOLVEMENT.
7. ALL WORK AREA AND STREET TRAFFIC CONTROL SHALL BE IN ACCORDANCE WITH THE SPECIFICATIONS OF THE WORK AREA TRAFFIC CONTROL BOOK AND SPECIFICATIONS FROM THE CITY, COUNTY OR STATE.
8. THE CITY, COUNTY OR STATE SHALL SPECIFY THE EXPIRATION PERIOD OF THE PERMIT FOR THIS CONSTRUCTION PROJECT.
9. THE MINIMUM COVER FOR ALL CONDUITS PLACED UNDERGROUND SHALL BE 36 INCHES TO THE FINISHED GRADE AT ALL TIMES.
10. THE CONTRACTOR SHALL TUNNEL ALL CURB AND GUTTERS AND BORE ALL CONCRETE DRIVEWAYS AND WALKWAYS AT THE DIRECTION OF THE CITY, COUNTY OR STATE INSPECTOR.
11. ALL AC. AND/OR CONCRETE PAVEMENT SHALL BE REPLACED AT THE DIRECTION OF THE CITY, COUNTY OR STATE ENGINEERS.
12. ALL SHRUBS, PLANTS OR TREES THAT HAVE BEEN DAMAGED OR DISTURBED DURING THE COURSE OF THE WORK, SHALL BE REPLANTED AND/OR REPLACED SO AS TO RESTORE THE WORK SITE TO ITS ORIGINAL CONDITION.
13. IF DAMAGE OCCURS TO THE CITY OR COUNTY FACILITIES, THE CONTRACTOR SHALL IMMEDIATELY NOTIFY, TRAFFIC CONTROL LIGHTING; (213) 485-4184 STREET LIGHTING (213) 485-2121 EXT. 311.
14. AT LEAST TWO DAYS PRIOR TO THE COMMENCEMENT OF ANY WORK, NOTIFY THE POLICE TRAFFIC BUREAU (213) 972-2445 AND THE FIRE DEPARTMENT; (213) 485-5162.
15. THE CONTRACTOR WILL BE RESPONSIBLE FOR THE PROCESSING OF ALL APPLICATION PERMIT FORMS ALONG WITH THE REQUIRED LIABILITY INSURANCE FORMS, CLEARLY DEMONSTRATING THAT VERIZON WIRELESS, THE CITY, COUNTY OR STATE AS ALSO INSURED WITH THE REQUIRED LIABILITY INSURANCE IN THE AMOUNT OF $__1,000,000.00__ FOR THIS CONSTRUCTION PROJECT.
16. VAULTS, PEDESTALS, CONDUITS AND OTHER TYPES OF SUBSTRUCTURE ARE EITHER SPECIFIED ON THIS PLAN OR WILL BE SPECIFIED BY THE CONSTRUCTION ENGINEER. ANY AND ALL DEVIATIONS FROM THE SPECIFIED TYPES OF MATERIAL MUST BE APPROVED BY THE SYSTEM ENGINEER, IN WRITING BEFORE INSTALLATION THEREOF.
17. ALL U.G. CONDUIT MUST BE SCHEDULE 40 OR BETTER.
18. CONDUIT REQUIREMENTS:
    UG-SCHEDULE 40 EXCEPT ALL RADIUS CONDUITS TO BE SCH. 80 RISERS-SCHEDULE 80.
19. GROUND REQUIREMENTS:
    5/8" ROD-10' LENGTH
    #2 GROUND WIRE
    WOOD MOLDING, STAPLED EVERY 3' AND AT EACH END GROUNDS 2' FROM POLE.
20. THE MYERS ELECTRICAL METER PEDESTAL NEEDS SILICONE SEALANT AT BASE AROUND THE PED TO PREVENT RAIN INTRUSION (LEAVE 1/2 INCH OPENING) AND ADD DESICCANT BAG "ADCOA" TYPE 1, SIZE 16 TO PEDESTAL AS REQUIRED.
21. POWER REQUIREMENT FOR 3 WIRE SERVICE 120/240V.
22. CONTRACTOR SHALL NOTIFY POWER COMPANY THREE DAYS PRIOR TO START OF CONSTRUCTION FOR CONDUIT INSPECTION.
23. ANY AND ALL PROPOSED SITE MODIFICATIONS, EXPANSION, OR REARRANGEMENT OF THIS CELLULAR SITE MUST BE COMPLIANT WITH ALL GO 95, AND GO 128 REGULATIONS AS PRESCRIBED BY STATE LAW. FUTURE EXPANSION OF THIS CELLULAR SITE MUST BE APPROVED BY THE DESIGNING ENGINEERING FIRM OR AN EQUALLY QUALIFIED ENGINEERING COMPANY.

GENERAL NOTES AND SPECIFICATIONS | 2

A&E DEVELOPMENT

core
DEVELOPMENT SERVICES
A&E SERVICES
2749 Saturn Street
Brea, California 92821
(714)729-8404 (714)333-4441 fax
www.core.us.com

PROPRIETARY INFORMATION

THE INFORMATION CONTAINED IN THIS SET OF CONSTRUCTION DOCUMENTS IS PROPRIETARY BY NATURE. ANY USE OR DISCLOSURE OTHER THAN THAT WHICH RELATES TO VERIZON WIRELESS IS STRICTLY PROHIBITED.

SITE BUILDER

verizon wireless
15505 SAND CANYON AVENUE
BLDG. D, FIRST FLR.
IRVINE, CALIFORNIA 92618
949.286.7000

SITE INFORMATION

SITE NAME:
SCL FAIRGREEN A1
R.O.W.

SITE ADDRESS

S/S/O
2545 S. GRAYDON AVE.,
MONROVIA, CA 91016

100% ZD's

DATE: 06/22/14

ENGINEERED BY: CORE DEVELOPMENT SERVICES

DRAFTED BY: CORE DEVELOPMENT SERVICES

REVISIONS

REV	DESCRIPTION	DATE/BY
0	ISSUED FOR REVIEW	06/22/14 LO
1	90% ZD'S	07/30/14 LO
2	100% ZD'S	10/10/14 LR

STAMP

SHEET TITLE

GENERAL NOTES & SPECIFICATIONS

SHEET NUMBER

T-2

SCALE: 1" = 20'

20' 0' 10' 20' 40'

COORDINATES:

LATITUDE 34°07'06.94" N
LONGITUDE 118°00'16.69" W

NAD 1983 GEODETIC COORDINATES AND ELEVATIONS WERE ESTABLISHED USING SURVEY GRADE "ASHTECH" G.P.S. RECEIVERS AND ASHTECH SURVEY GRADE PRECISION SOFTWARE FOR POST-PROCESSING.

BASIS OF BEARINGS:

THE CENTERLINE OF PECK ROAD BEING NORTH 00°00'45" EAST PER TRACT NO. 52780, M.B. 1287/98-99, RECORDS OF LOS ANGELES COUNTY.

ASSESSOR'S IDENTIFICATION:

N/A

AREA:

N/A

BENCH MARK REFERENCE:

U.S.G.S. BENCH MARK "BM 370"

UNITED STATES GEOLOGICAL SURVEY BENCH MARK "BM 370" AS SHOWN ON THE "EL MONTE" 7.5 MINUTE QUADRANGLE MAP.

ELEVATION: 372.5 FEET A.M.S.L. (NAVD88) (DATUM VERIFIED IN FIELD TO BE WITHIN 1-A ACCURACY STANDARDS)

TITLE REPORT IDENTIFICATION:

N/A

EASEMENT NOTES:

N/A

LEGAL DESCRIPTION:

N/A

DATE OF SURVEY:

JULY 25, 2014

SURVEYORS NOTE:

THE RIGHT OF WAY LINES AND THEIR DIMENSIONS SHOWN HEREON ARE PER READILY AVAILABLE RECORDED INFORMATION AND THEIR LOCATIONS ARE APPROXIMATE, PENDING RECEIPT OF TITLE REPORT(S) FOR THE ADJACENT REAL PROPERTY.

LIVING PLANTS STATEMENT:

THE HEIGHTS AND ELEVATIONS FOR THE TREES, BUSHES AND OTHER LIVING PLANTS SHOWN HEREON, SHOULD BE CONSIDERED APPROXIMATE (+/-) AND ONLY VALID FOR THE DATE OF THIS SURVEY. THEY ARE PROVIDED AS A GENERAL REFERENCE AND SHOULD NOT BE USED FOR DESIGN PURPOSES.

LEGEND:

APX	APEX
BLD	BUILDING
CPD	CONCRETE PAD
EOC	EDGE OF CONCRETE
FD	FOUND
FL	FLOW LINE
FS	FINISHED SURFACE
FW	FRONT OF WALK
GL	GUTTER LIP
H	HEIGHT
IN	INCHES
L/T	LEAD AND TACK
LT	LIGHT
LTT	LEAD, TACK, AND TAG
MS	MOW STRIP
NG	NATURAL GROUND
OHW	OVERHEAD WIRE
S/W	SPIKE AND WASHER
SL	STREET LIGHT
SMH	SEWER MANHOLE
SS	STREET SIGN
TC	TOP OF CURB
TP	TOP
TR	TREE
TRPM	PALM TREE
TW	TOP OF WALL
UP	UTILITY POLE
WDF	WOOD FENCE

BLOCK WALL
CENTERLINE
FOUND MONUMENT
SEWER MANHOLE
STREET LIGHT
STREET SIGN
UTILITY POLE
WOOD FENCE

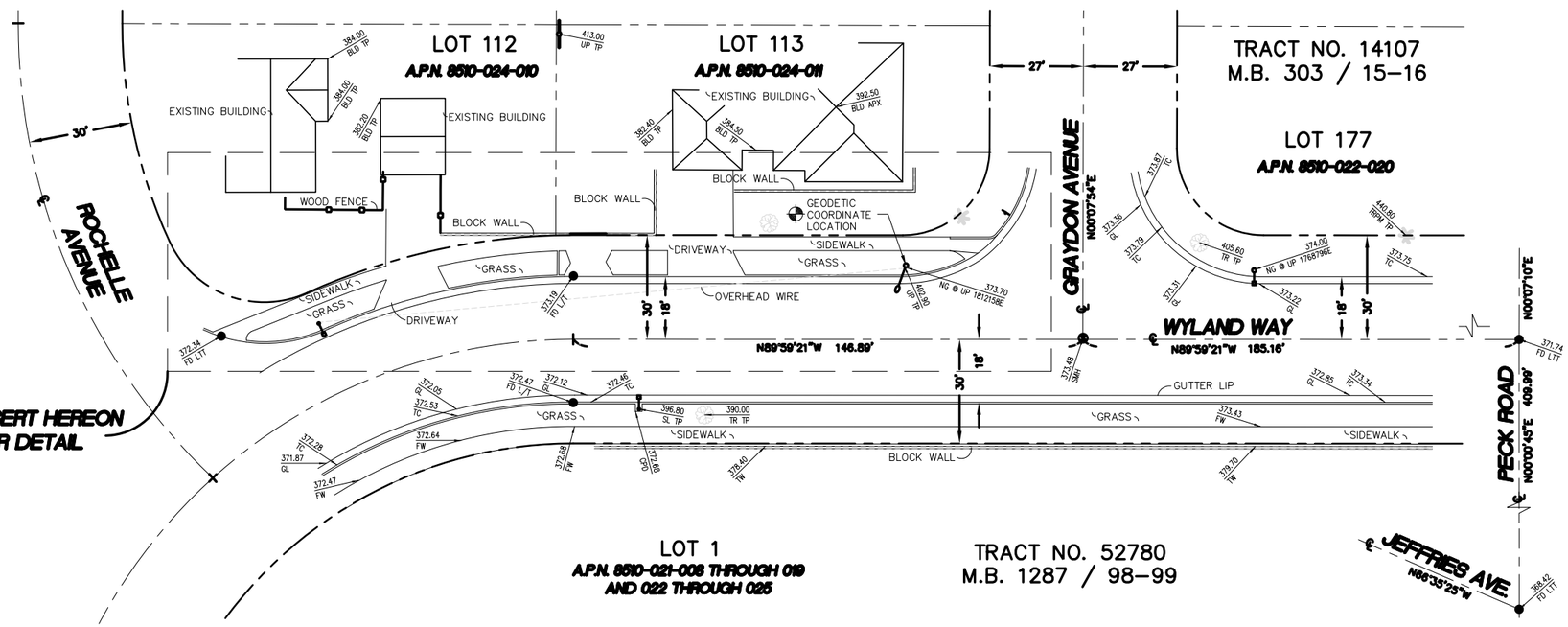

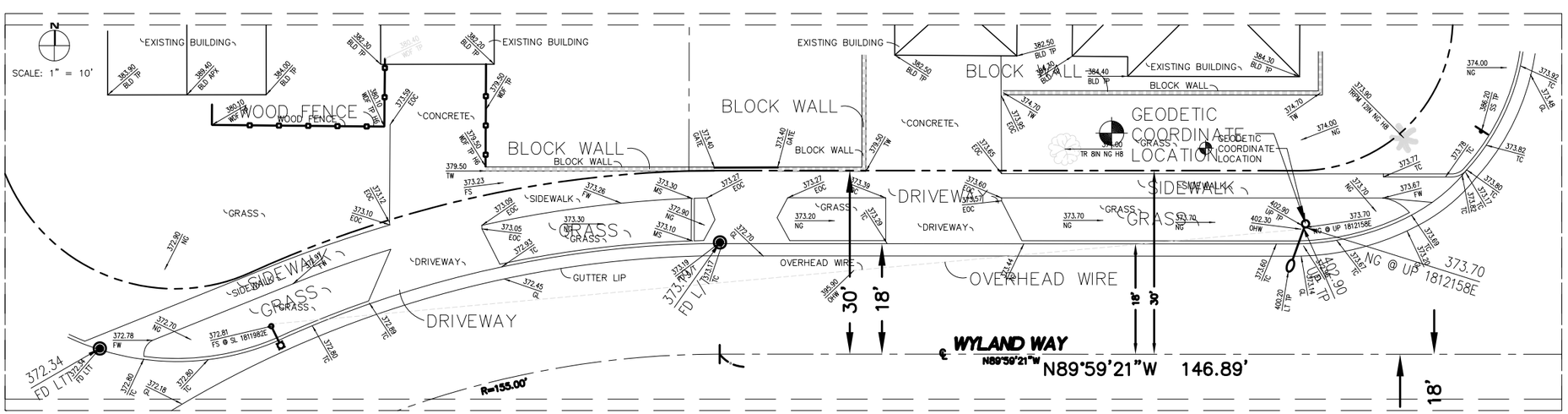

PROFESSIONAL LAND SURVEYOR
BERT HAZE
No. 7211
Exp. 3-31-16
STATE OF CALIFORNIA

A&E DEVELOPMENT

core

DEVELOPMENT SERVICES
A&E SERVICES

2749 Saturn Street
Brea, California 92821
(714)729-8404 (714)333-4441 fax
www.core.us.com

PROPRIETARY INFORMATION

THE INFORMATION CONTAINED IN THIS SET OF CONSTRUCTION DOCUMENTS IS PROPRIETARY BY NATURE. ANY USE OR DISCLOSURE OTHER THAN THAT WHICH RELATES TO VERIZON WIRELESS IS STRICTLY PROHIBITED.

SITE BUILDER

verizon wireless

15505 SAND CANYON AVENUE
BLDG. D, FIRST FLR.
IRVINE, CALIFORNIA 92618
949.286.7000

SITE INFORMATION

SITE NAME:
SCL FAIRGREEN A1
R.O.W.

SITE ADDRESS

S/S/O
2545 S. GRAYDON AVE.,
MONROVIA, CA 91016

100% ZD's

DATE:
06/22/14

ENGINEERED BY:
CORE DEVELOPMENT SERVICES

DRAFTED BY:
CORE DEVELOPMENT SERVICES

REVISIONS

REV	DESCRIPTION	DATE/BY
0	ISSUED FOR REVIEW	06/22/14 LO
1	90% ZD'S	07/30/14 LO
2	100% ZD'S	10/10/14 LR

STAMP

SHEET TITLE

SURVEY

SHEET NUMBER

S-1

UNDERGROUND UTILITIES NOTE:

THE LOCATIONS AND EXISTENCE OF ANY UNDERGROUND PIPES, STRUCTURES OR CONDUITS SHOWN ON THIS PLAN WERE OBTAINED BY A SEARCH OF AVAILABLE RECORDS. THERE MAY BE EXIST. UTILITIES OTHER THAN THOSE SHOWN ON THIS PLAN. THE CONTRACTOR IS REQUIRED TO TAKE PRECAUTIONARY MEASURES TO PROTECT THE UTILITY LINES SHOWN AND ANY OTHER LINES NOT SHOWN ON THIS PLAN.

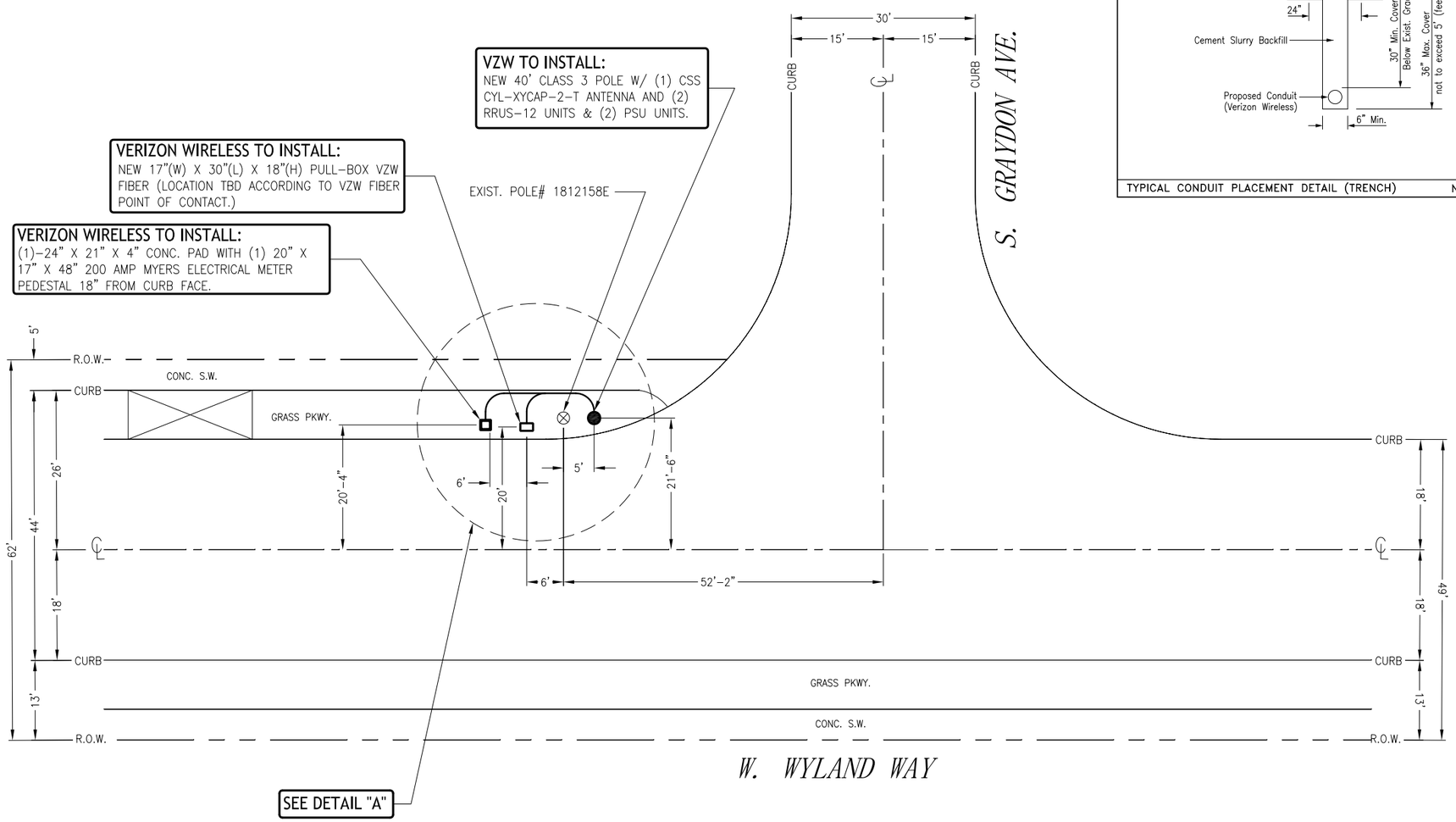

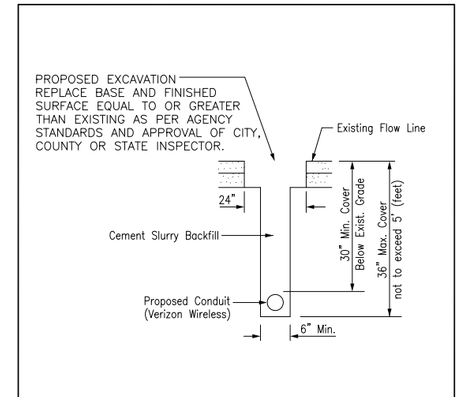

TYPICAL CONDUIT PLACEMENT DETAIL (TRENCH) N.T.S.

NOTES:

1) IT SHALL BE THE CONTRACTOR'S RESPONSIBILITY TO COORDINATE WITH THE PROPERTY OWNER & NECESSARY UTILITY COMPANIES FOR THE LOCATION OF ALL EXISTING BELOW GRADE UTILITIES PRIOR TO BEGINNING CONSTRUCTION. CONTRACTOR SHALL BE RESPONSIBLE FOR ANY DAMAGE COSTS ASSOCIATED WITH EXISTING BELOW GRADE UTILITIES.
2) CONTRACTOR TO COORDINATE WITH UTILITY COMPANY FOR CONNECTION OF TEMPORARY AND PERMANENT POWER TO THE SITE. THE TEMPORARY POWER AND ALL HOOKUP COSTS TO BE PAID BY CONTRACTOR.
3) CONTRACTOR TO VERIFY LOCAL UTILITY REQUIREMENTS FOR DEPTH, SIZE & SEPARATION OF CONDUITS PRIOR TO INSTALLATION. NOTIFY CONSTRUCTION MANAGER IMMEDIATELY OF ANY DISCREPANCIES.
4) CONTRACTOR TO CALL DIG ALERT (800)-227-2600 A MINIMUM OF 48 HRS PRIOR TO EXCAVATING FOR UNDERGROUND UTILITY LOCATIONS.CONTRACTOR IS RESPONSIBLE TO HAVE ALL NONPUBLIC UTILITIES LOCATED AT THEIR OWN EXPENSE.
5) PROPOSED UTILITY SERVICES SHOWN NEED TO BE VERIFIED & APPROVED BY UTILITY COMPANIES BEFORE START OF CONSTRUCTION. CONTRACTOR TO VERIFY WITH CLIENT PROJECT MANAGER TO OBTAIN FINAL APPROVAL.
6) LINES SHOWN DO NOT REPRESENT THE EXACT LOCATION OF THE CONDUIT RUNS CONTRACTOR TO VERIFY SERVICE LOCATIONS w/ACTUAL FIELD CONDITIONS.
7) CONTRACTOR SHALL IMMEDIATELY INFORM CLIENT OF ANY ACCIDENTAL DAMAGE TO EXISTING UTILITIES BY TELEPHONE AND E-MAIL REGARDLESS OF ABILITY TO REPAIR OR MITIGATE. A FOLLOW-UP E-MAIL REPORT WITH DIGITAL PHOTOS WILL BE REQUIRED DAILY UNTIL RESOLUTION HAS BEEN ACCEPTED BY CLIENT AND AFFECTED SERVICE PROVIDERS AND RECIPIENTS. AT THEIR OWN EXPENSE, CONTRACTOR WILL EXERCISE ALL EFFORTS TO HAVE REPAIRS MADE BY QUALIFIED TECHNICIANS AS APPROVED BY SERVICE PROVIDER.

DIGALERT
811
CALL AT LEAST TWO DAYS BEFORE YOU DIG
UNDERGROUND SERVICE ALERT OF SOUTHERN CALIFORNIA
TICKET #_____

SCALE
1"=10'-0"

A&E DEVELOPMENT

core
DEVELOPMENT SERVICES
A&E SERVICES
2749 Saturn Street
Brea, California 92821
(714)729-8404 (714)333-4441 fax
www.core.us.com

PROPRIETARY INFORMATION

THE INFORMATION CONTAINED IN THIS SET OF CONSTRUCTION DOCUMENTS IS PROPRIETARY BY NATURE. ANY USE OR DISCLOSURE OTHER THAN THAT WHICH RELATES TO VERIZON WIRELESS IS STRICTLY PROHIBITED.

SITE BUILDER

verizon wireless
15505 SAND CANYON AVENUE
BLDG. D, FIRST FLR.
IRVINE, CALIFORNIA 92618
949.286.7000

SITE INFORMATION

SITE NAME:
SCL FAIRGREEN A1
R.O.W.

SITE ADDRESS

S/S/O
2545 S. GRAYDON AVE.,
MONROVIA, CA 91016

100% ZD's

DATE: 06/22/14

ENGINEERED BY: CORE DEVELOPMENT SERVICES

DRAFTED BY: CORE DEVELOPMENT SERVICES

REVISIONS

REV	DESCRIPTION	DATE/BY
0	ISSUED FOR REVIEW	06/22/14 LO
1	90% ZD'S	07/30/14 LO
2	100% ZD'S	10/10/14 LR

STAMP

SHEET TITLE

SITE PLAN

SHEET NUMBER

A-1

CONSTRUCTION DATA

1. PL 10' 1–2", 1–4" CONDUIT FOR VZW FIBER & PWR (JOINT OPEN TRENCH)
2. PL 7' 1–2" CONDUIT FOR VZW FIBER (OPEN TRENCH)
3. PL 17"(W) X 30"(L) X 18"(H) VZW PULL–BOX
4. PL 13' 1–4" CONDUIT FOR VZW POWER (OPEN TRENCH)
5. PL (1) 20" X 17" X 48" 200 AMP MYERS ELECTRICAL METER PEDESTAL

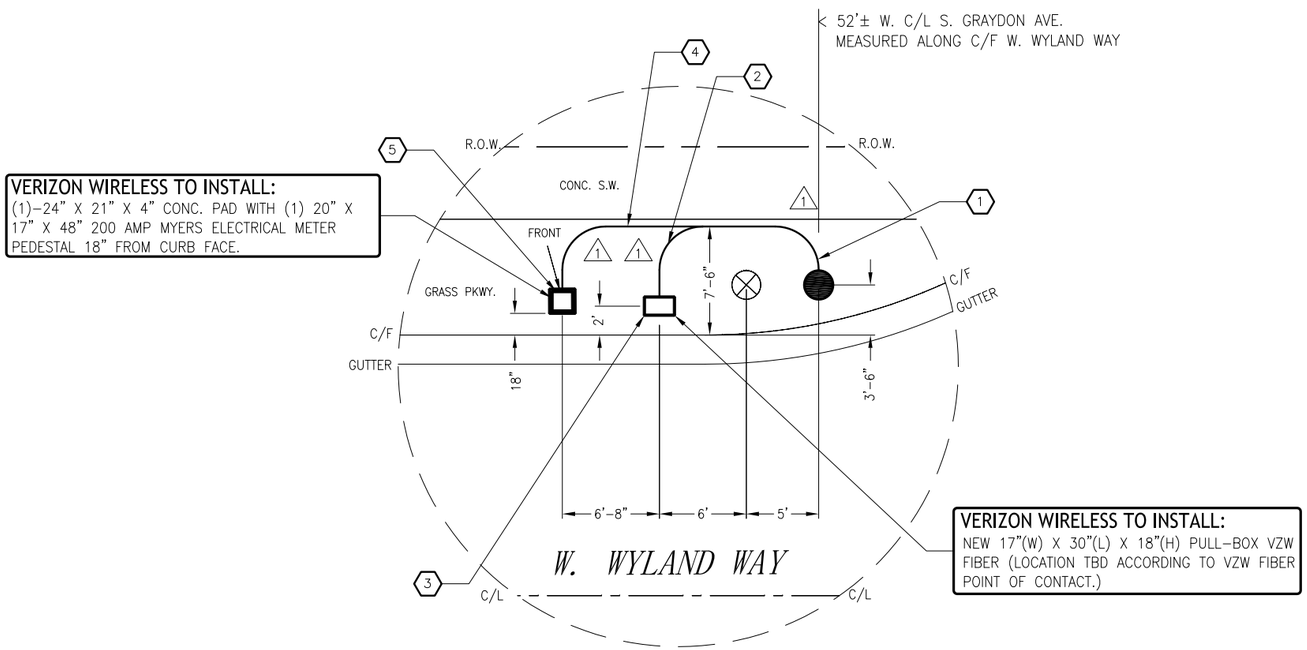

DETAIL "A"
SCALE: 1"=5'

CONDUIT CURVE DATA
△1
R = 3'–0"
∢ = 90°
L = 4'–8"

SCALE
1"=5'–0"

A&E DEVELOPMENT

core
DEVELOPMENT SERVICES
A&E SERVICES
2749 Saturn Street
Brea, California 92821
(714)729-8404 (714)333-4441 fax
www.core.us.com

PROPRIETARY INFORMATION

THE INFORMATION CONTAINED IN THIS SET OF CONSTRUCTION DOCUMENTS IS PROPRIETARY BY NATURE. ANY USE OR DISCLOSURE OTHER THAN THAT WHICH RELATES TO VERIZON WIRELESS IS STRICTLY PROHIBITED.

SITE BUILDER

verizon wireless
15505 SAND CANYON AVENUE
BLDG. D, FIRST FLR.
IRVINE, CALIFORNIA 92618
949.286.7000

SITE INFORMATION

SITE NAME:
SCL FAIRGREEN A1
R.O.W.

SITE ADDRESS

S/S/O
2545 S. GRAYDON AVE.,
MONROVIA, CA 91016

100% ZD's

DATE: 06/22/14

ENGINEERED BY: CORE DEVELOPMENT SERVICES

DRAFTED BY: CORE DEVELOPMENT SERVICES

REVISIONS

REV	DESCRIPTION	DATE/BY
0	ISSUED FOR REVIEW	06/22/14 LO
1	90% ZD'S	07/30/14 LO
2	100% ZD'S	10/10/14 LR

STAMP

SHEET TITLE
ENLARGED SITE PLAN

SHEET NUMBER
A–2

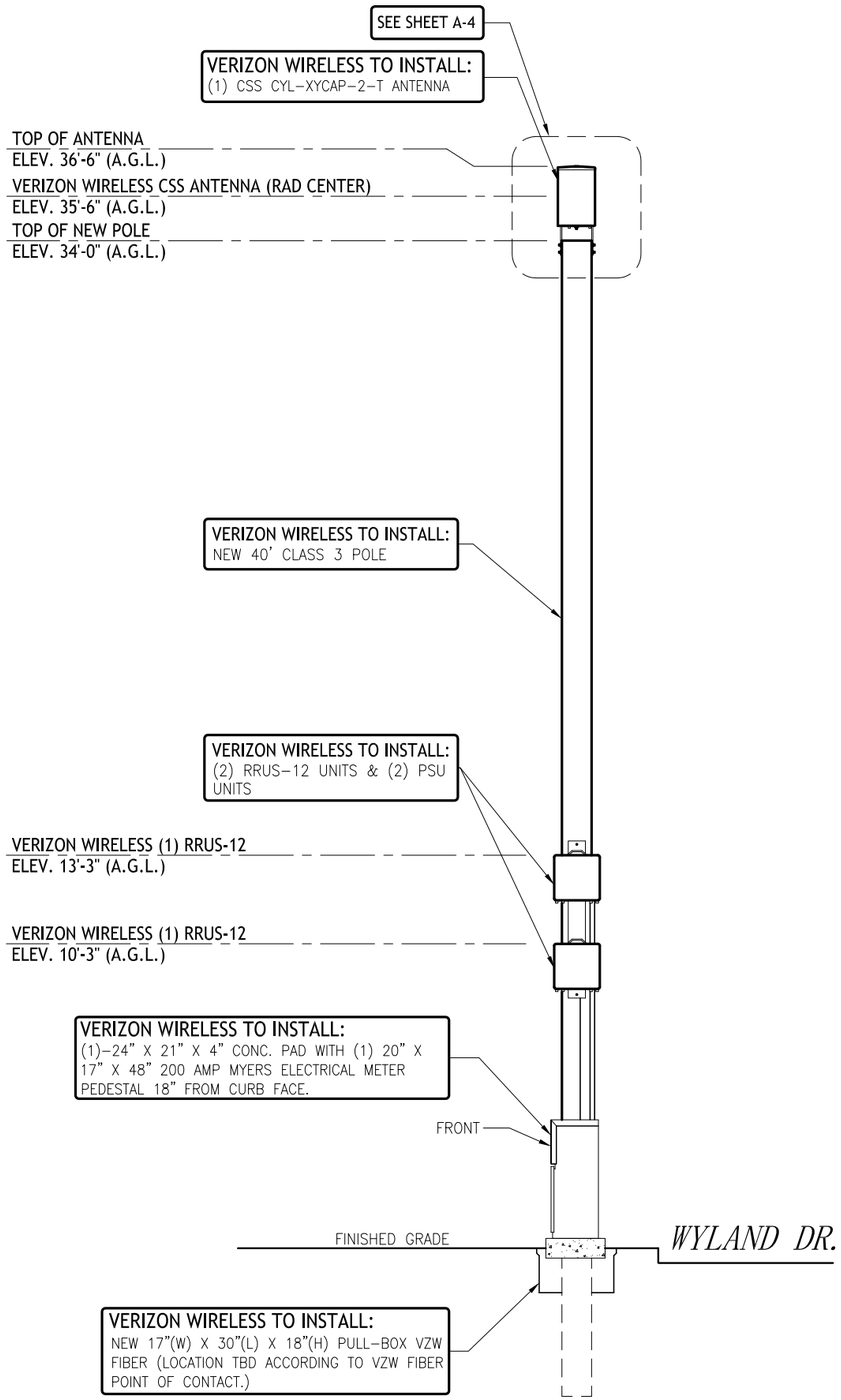

VIEW LOOKING EAST — SCALE N.T.S. — 1

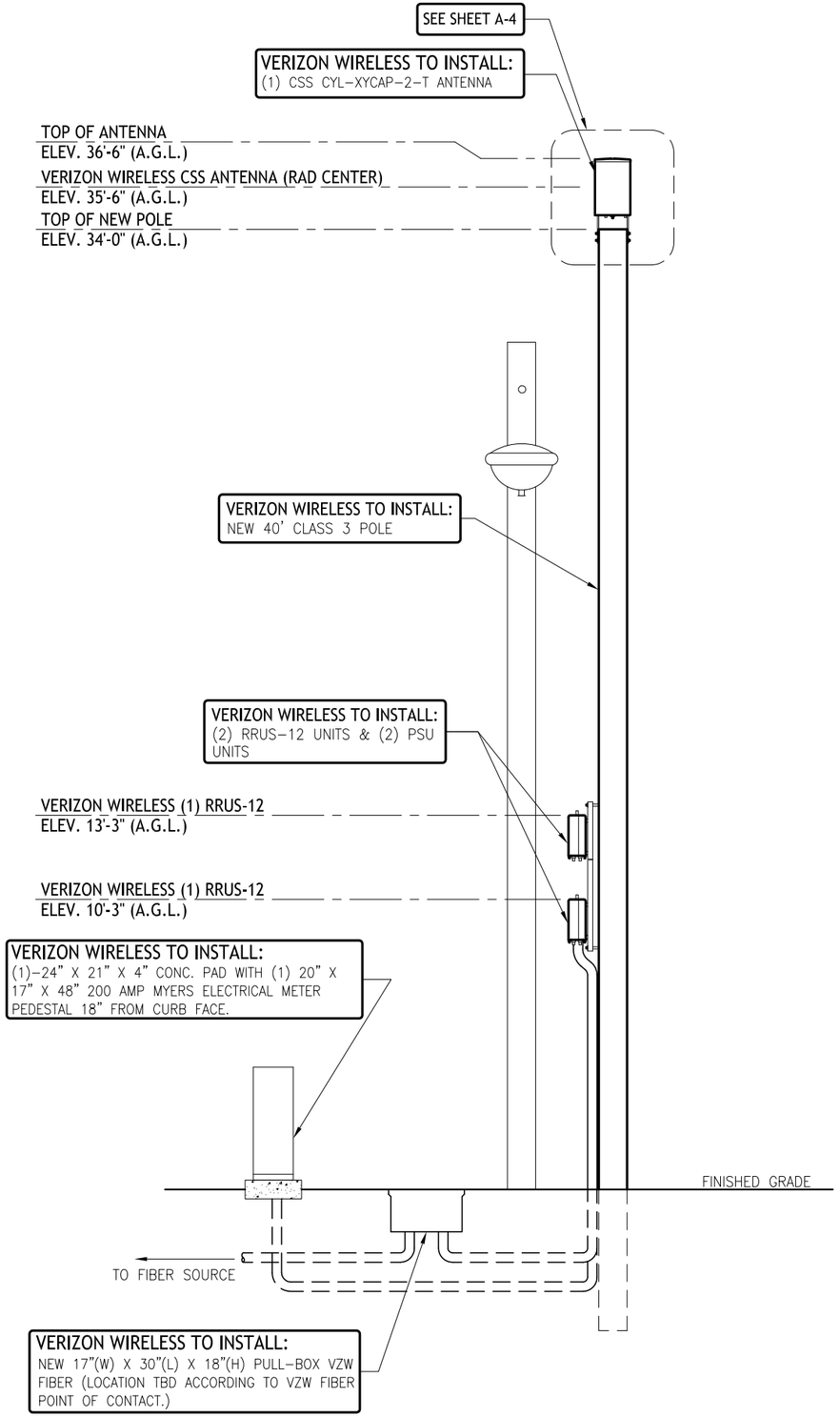

VIEW LOOKING NORTH — SCALE N.T.S. — 2

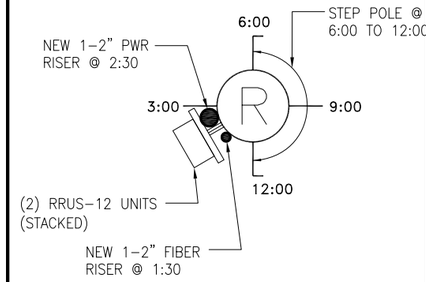

RISER DETAIL

SCALE N.T.S. — 3

1. VZW TO INSTALL NEW 40' CLASS 3 POLE.
2. VZW TO PL. 3 SECTOR CANISTER ANTENNA RAD @ 35'-6"" AGL. 110°, 230° & 350°.
3. VZW TO PL. (2) 40W RRUS-12'S W/ (2) PSU'S ON STANDOFF BRACKET @ 1:00-2:00.
6. VZW TO PL. 1-2" POWER RISER @ 2:30.
7. VZW TO PL. 1-2" FIBER RISER @ 1:30.
8. VZW TO STEP POLE @ 6:00 & 12:00.
9. VZW TO TAG NEW VZW POLE W/ NEW POLE#.

MAKE READY NOTES — SCALE N.T.S. — 4

A&E DEVELOPMENT

core
DEVELOPMENT SERVICES
A&E SERVICES
2749 Saturn Street
Brea, California 92821
(714)729-8404 (714)333-4441 fax
www.core.us.com

PROPRIETARY INFORMATION

THE INFORMATION CONTAINED IN THIS SET OF CONSTRUCTION DOCUMENTS IS PROPRIETARY BY NATURE. ANY USE OR DISCLOSURE OTHER THAN THAT WHICH RELATES TO VERIZON WIRELESS IS STRICTLY PROHIBITED.

SITE BUILDER

verizon wireless
15505 SAND CANYON AVENUE
BLDG. D, FIRST FLR.
IRVINE, CALIFORNIA 92618
949.286.7000

SITE INFORMATION

SITE NAME:
SCL FAIRGREEN A1
R.O.W.

SITE ADDRESS
S/S/O
2545 S. GRAYDON AVE.,
MONROVIA, CA 91016

100% ZD's

DATE: 06/22/14

ENGINEERED BY: CORE DEVELOPMENT SERVICES

DRAFTED BY: CORE DEVELOPMENT SERVICES

REVISIONS

REV	DESCRIPTION	DATE/BY
0	ISSUED FOR REVIEW	06/22/14 LO
1	90% ZD'S	07/30/14 LO
2	100% ZD'S	10/10/14 LR

STAMP

SHEET TITLE
ELEVATIONS

SHEET NUMBER
A-3

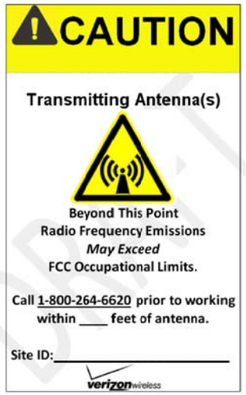

1. INSTALL ONE SIGN 3–4' BELOW THE ANTENNA (FROM TOP OF SIGN)
2. INSTALL SECOND SIGN 8–10' ABOVE THE GROUND (FROM BOTTOM OF SIGN)

G095 RF SIGNAGE

SCALE N.T.S. | 1

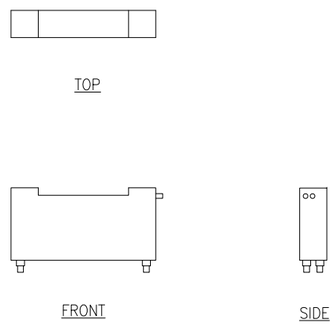

PSU DETAIL

SCALE N.T.S. | 2

NOT USED

SCALE N.T.S. | 3

ANTENNA SPECIFICATIONS

MANUFACTURER: CSS ANTENNA
MODEL: CYL–X7CAP–2–T NO GPS)
HEIGHT: 24.2 IN
ø: 15.1 IN

WEIGHT: 22 LBS

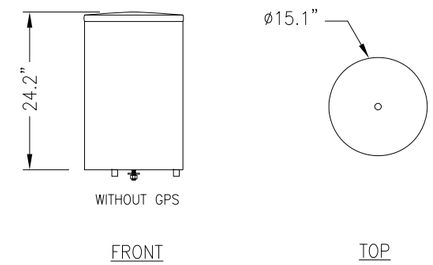

CSS CYL-X7CAP-2-T ANTENNA SPECS

SCALE N.T.S. | 4

VERIZON WIRELESS TO INSTALL:
(2) RRUS–12'S, (2) PSU'S & (1) CSS CYL–X7CAP–2–T ANTENNA

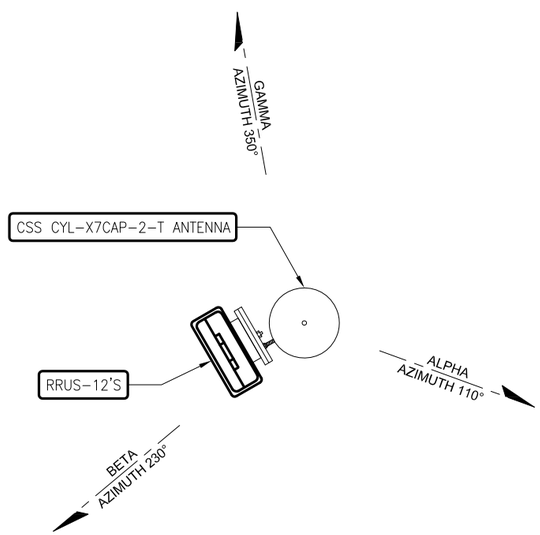

CURB FACE

W. WYLAND WAY

TOP VIEW

ANTENNA CONFIGURATION

SCALE N.T.S. | 5

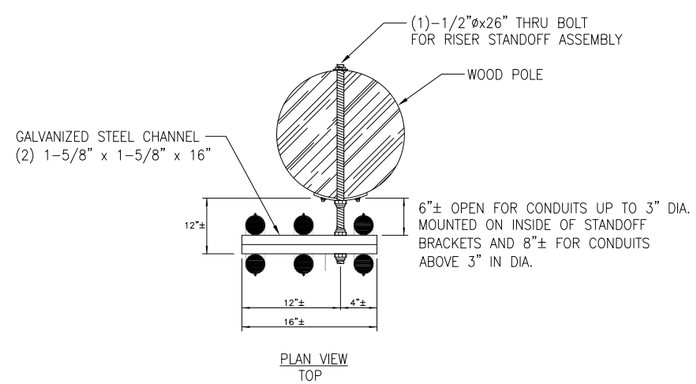

MULTIPLE RISER CONSTRUCTION
WITH OFFSET STANDOFF RISER "DOGGLES"

● = RISER LOCATION OPTIONS
(SEE POLE RISER DETAIL
FOR ACTUAL RISER LOCATIONS)

BRACKET, RISER AND STANDOFF

SCALE N.T.S. | 6

NOTE:
USE MANUFACTURER SUPPLIED MOUNTING HARDWARE FOR RRU ATTACHMENT.

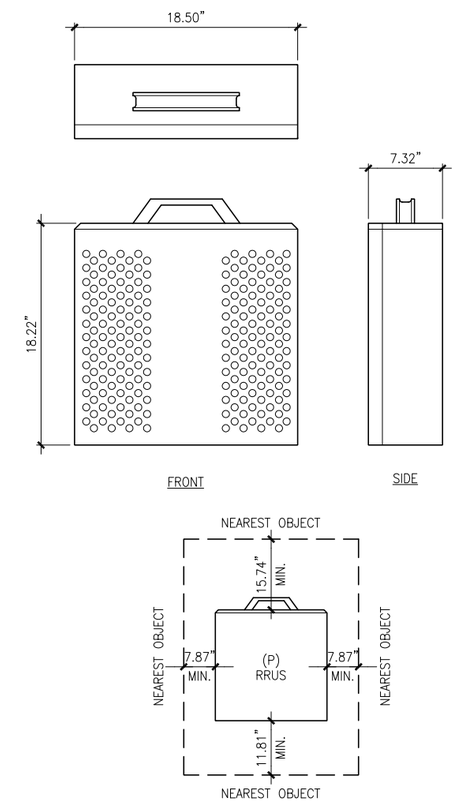

*KEEP 40" CLEAR FROM FRONT OF RRU

RRUS-12 SPECIFICATIONS

SCALE N.T.S. | 7

A&E DEVELOPMENT

core
DEVELOPMENT SERVICES
A&E SERVICES
2749 Saturn Street
Brea, California 92821
(714)729-8404 (714)333-4441 fax
www.core.us.com

PROPRIETARY INFORMATION

THE INFORMATION CONTAINED IN THIS SET OF CONSTRUCTION DOCUMENTS IS PROPRIETARY BY NATURE. ANY USE OR DISCLOSURE OTHER THAN THAT WHICH RELATES TO VERIZON WIRELESS IS STRICTLY PROHIBITED.

SITE BUILDER

verizonwireless
15505 SAND CANYON AVENUE
BLDG. D, FIRST FLR.
IRVINE, CALIFORNIA 92618
949.286.7000

SITE INFORMATION

SITE NAME:
SCL FAIRGREEN A1
R.O.W.

SITE ADDRESS

S/S/O
2545 S. GRAYDON AVE.,
MONROVIA, CA 91016

100% ZD's

DATE: 06/22/14

ENGINEERED BY: CORE DEVELOPMENT SERVICES

DRAFTED BY: CORE DEVELOPMENT SERVICES

REVISIONS

REV	DESCRIPTION	DATE/BY
0	ISSUED FOR REVIEW	06/22/14 LO
1	90% ZD'S	07/30/14 LO
2	100% ZD'S	10/10/14 LR

STAMP

SHEET TITLE

POLE & EQUIP. DETAILS

SHEET NUMBER

A–4

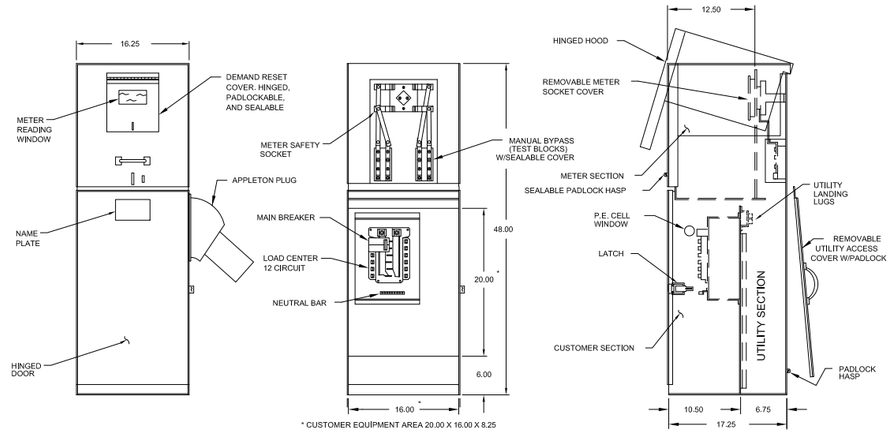

FRONT VIEW

FRONT VIEW
LESS DOOR, DEADFRONT, AND COVER

SIDE VIEW

200 AMP MYERS ELECTRICAL METER PEDESTAL

SCALE N.T.S. | 1

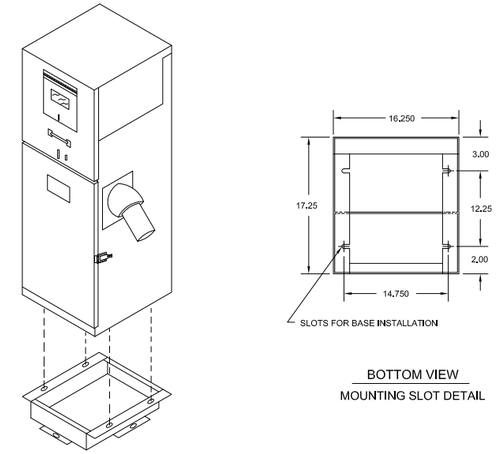

BOTTOM VIEW
MOUNTING SLOT DETAIL

200 AMP MYERS ELECTRICAL METER PEDESTAL (ISOMETRIC VIEW)

SCALE N.T.S. | 2

BASE DETAIL

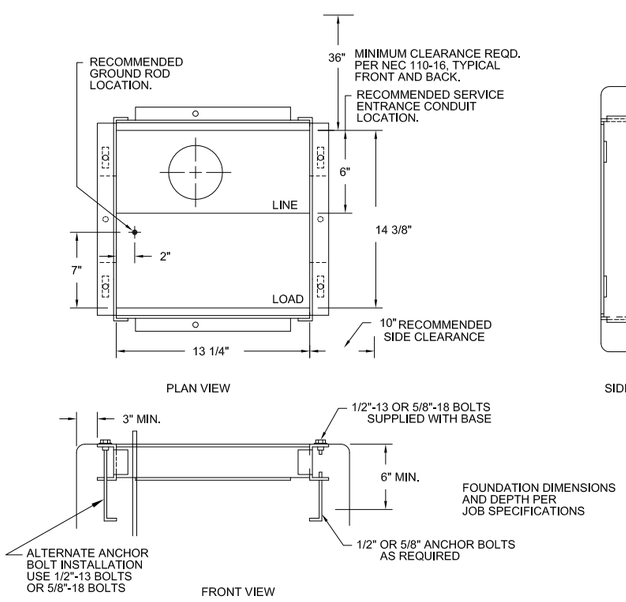

200 AMP MYERS ELECTRICAL METER PEDESTAL CONCRETE PAD

SCALE N.T.S. | 5

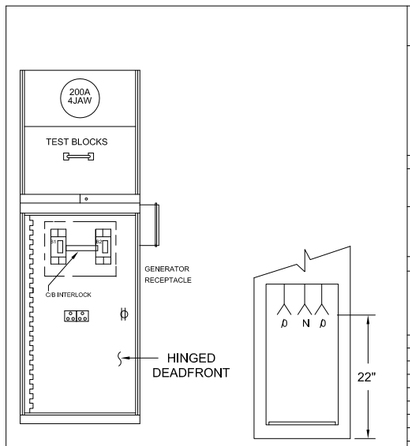

FOR BASE DETAIL SEE MYERS CATALOG.

MYERS POWER PRODUCTS
725 E. HARRISON ST., CORONA, CA. 92879

CAT. NO. MEUG20-M200 (MOD)
SEE DRAWING 5101246 FOR WIRING DIAGRAM
120/240 V 1 Ø 3 W 200 AMPS
UTILITY SCE 42K AIC
DISTRIBUTOR
CONTRACTOR
FINISH COLOR ■ LT. GREEN ☐ WHITE ☐ DK. GREEN ☐ OTHER
STATE INSPECTION REQUIRED ☐ YES ☐ NO
U.L. LABEL ☐ SERVICE EQUIPMENT ■ INDUSTRIAL CONTROL ☐ CABINET & BOXES
NAMEPLATES PHENOLIC ☐ ☐ BREAKER I.D. ☐ CONTRACT NO. ☐ LOCATION ☐ POWER POLE NO.
PHOTOCELL REQUIRED ☐ YES ☐ NO PHOTOCELL PROVISIONS ☐ YES ☐ NO

MYERS METERED UNDERGROUND SERVICE PEDESTAL
NEMA 3R CONSTRUCTION-POLYESTER POWDER COAT FINISH OVER ZINC COATED STEEL -STAINLESS STEEL HARDWARE
ALL FACTORY WIRING CODE GAUGE COPPER CONDUCTORS WITH 600V INSULATION
SERVICE TERMINATIONS NO. 6 AWG TO 250 MCM CU/AL

MATERIAL LIST

NO	DESCRIPTION	QTY	AMP	POLE	KAIC		MYERS P/N
B1	UTILITY SERV. DISC.	1	200	2	42K	CH TYPE ED2200L	G21073
B2	GEN. DISC.	1	200	2	42K	CH TYPE ED2200L	G21073
GR	GEN. RECEPTACLE	1	200	4	240V	HBL#4200RS1WR	Y30013

DATE: 12/07/05 BY: JLT S/O # SM95073 F5101246

MYERS ELECTRICAL METER PEDESTAL (200 AMP WITH GENERATOR PLUG)

SCALE N.T.S. | 3

CIRCUIT DIRECTORY

NO.	DESCRIPTION	AMP	POLE
B1	UTILITY SERV. DISC.	200	2
B2	GENERATOR DISC.	200	2

MYERS POWER PRODUCTS, INC.
725 E. HARRISON, CORONA CA 92879

MEUG20-M200 (MOD)
120/240 VAC 1 PHASE 3 WIRE 200 AMPS MAXIMUM
SEE MAIN BREAKER HANDLE

INDUSTRIAL CONTROL-SUITABLE ONLY FOR USE AS SERVICE EQUIPMENT.

RAINPROOF TYPE 3R.

METER SOCKET 200 AMPS CONTINUOUS

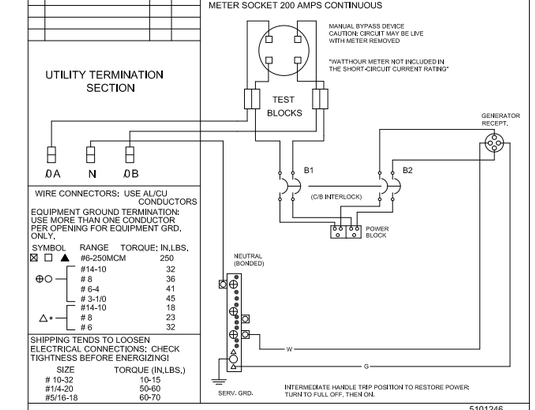

WIRE CONNECTORS: USE AL/CU CONDUCTORS
EQUIPMENT GROUND TERMINATION: USE MORE THAN ONE CONDUCTOR PER OPENING FOR EQUIPMENT GRD. ONLY.

SYMBOL	RANGE	TORQUE; IN.LBS.
☒ ☐ ▲	#6-250MCM	250
⊕○	#14-10	32
	# 8	36
	# 6-4	41
△•	# 3-1/0	45
	#14-10	18
	# 8	23
	# 6	32

SHIPPING TENDS TO LOOSEN ELECTRICAL CONNECTIONS; CHECK TIGHTNESS BEFORE ENERGIZING!

SIZE	TORQUE (IN.LBS.)
# 10-32	10-15
#14-20	50-60
#5/16-18	60-70

BONDED NEUTRAL, REMOVE BONDING MEANS FOR TEST PURPOSES ONLY
SERVICE DISCONNECT: CUTLER-HAMMER TYPE ED.

SHORT CIRCUIT RATING: RMS SYMMETRICAL AMPS 42,000 AT 120/240 VAC. THE SHORT CIRCUIT RATING IS LIMITED TO THE LOWEST INTERUPTING CAPACITY OF ANY DEVICE INSTALLED THERIN REPLACEMENT BREAKERS MUST BE SAME TYPE AND RATING, FIELD INSTALLED CONDUCTORS SHOULD BE SIZED BASED ON 60°C AMPACITY FOR 14-1 AWG AND 75°C AMPACITY OVER 1 AWG PER TABLE 310-16 OF NEC.

200 AMP MYERS ELECTRICAL METER PEDESTAL WIRE DIAGRAM

SCALE N.T.S. | 4

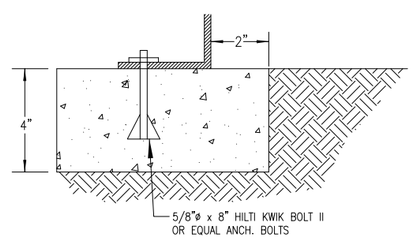

TYPICAL ANCHOR BOLT DETAIL

SCALE N.T.S. | 6

1. ELECTRICAL CONTRACTOR SHALL PERFORM TEST TO DETERMINE GROUND RESISTANCE.
2. IF RESISTANCE EXCEEDS 5 OHMS ELECTRICAL CONTRACTOR SHALL DETERMINE, FROM TEST RESULTS, NUMBER OF RODS REQUIRED.

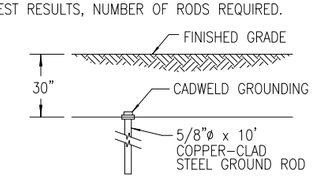

GROUND ROD DETAIL

SCALE N.T.S. | 7

A&E DEVELOPMENT

core
DEVELOPMENT SERVICES
A&E SERVICES
2749 Saturn Street
Brea, California 92821
(714)729-8404 (714)333-4441 fax
www.core.us.com

PROPRIETARY INFORMATION

THE INFORMATION CONTAINED IN THIS SET OF CONSTRUCTION DOCUMENTS IS PROPRIETARY BY NATURE. ANY USE OR DISCLOSURE OTHER THAN THAT WHICH RELATES TO VERIZON WIRELESS IS STRICTLY PROHIBITED.

SITE BUILDER

verizon wireless
15505 SAND CANYON AVENUE
BLDG. D, FIRST FLR.
IRVINE, CALIFORNIA 92618
949.286.7000

SITE INFORMATION

SITE NAME:
SCL FAIRGREEN A1
R.O.W.

SITE ADDRESS

S/S/O
2545 S. GRAYDON AVE.,
MONROVIA, CA 91016

100% ZD's

DATE: 06/22/14
ENGINEERED BY: CORE DEVELOPMENT SERVICES
DRAFTED BY: CORE DEVELOPMENT SERVICES

REVISIONS

REV	DESCRIPTION	DATE/BY
0	ISSUED FOR REVIEW	06/22/14 LO
1	90% ZD'S	07/30/14 LO
2	100% ZD'S	10/10/14 LR

STAMP

SHEET TITLE
MYERS CABINET DETAILS

SHEET NUMBER
A-5

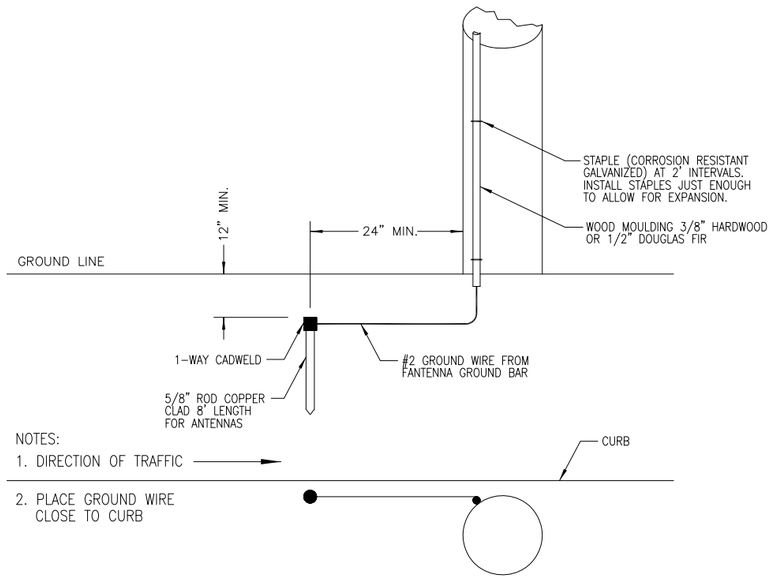

NOTES:
1. DIRECTION OF TRAFFIC
2. PLACE GROUND WIRE CLOSE TO CURB

NOTES:
1. ALL STRANDED GROUND WIRE TO BE GREEN JACKETED. GROUND SCHEME MAY VARY DUE TO SITE SPECIFIC CONDITIONS.

TYPICAL WOOD POLE GROUNDING DETAIL

SCALE N.T.S. | 1

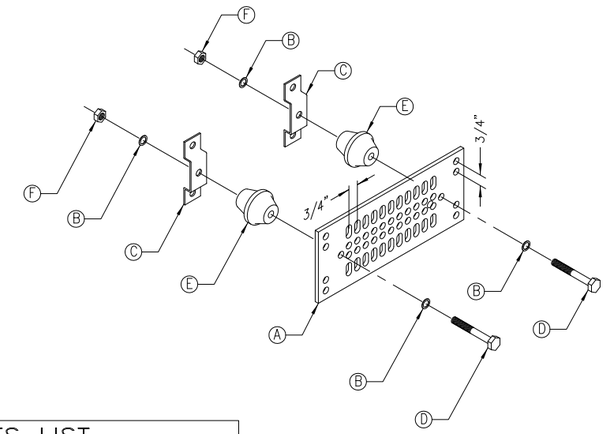

PARTS LIST	
A	COPPER GROUND BAR, USE STYLE "I" GTI TELECOM, INC. (ACTUAL GROUND BAR SIZE WILL VARY BASED ON NUMBER OF GROUND CONNECTIONS)
B	5/8" LOCK WASHERS, NEWTON INSTRUMENT CO. CAT. NO. 3015-8 OR EQUAL
C	WALL MOUNTING BRACKET, NEWTON INSTRUMENT CO. CAT. NO. A-6056 OR EQUAL
D	5/8-11 X 1" HHCS BOLTS, NEWTON INSTRUMENT CO. CAT. NO. 3012-1 OR EQUAL
E	INSULATORS SHALL BE INSTALLED
F	5/8-11 NUT

TYPICAL GROUND BAR

SCALE N.T.S. | 2

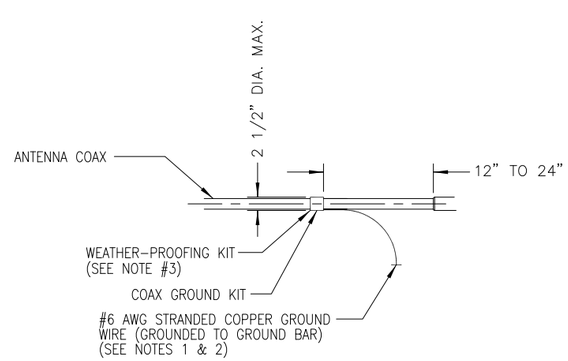

NOTES:
1. DO NOT INSTALL COAX GROUND KIT AT A BEND AND ALWAYS DIRECT GROUND WIRE DOWN TO GROUND BEND.
2. GROUNDING KIT SHALL BE TYPE AND PART NUMBER AS SUPPLIED OR RECOMMENDED BY COAX MANUFACTURER.
3. WEATHER PROOFING SHALL BE TWO- PART TAPE KIT, COLD SHRINK SHALL NOT BE USED.

CONNECTION OF COAX GROUND KIT TO ANTENNA COAX

SCALE N.T.S. | 3

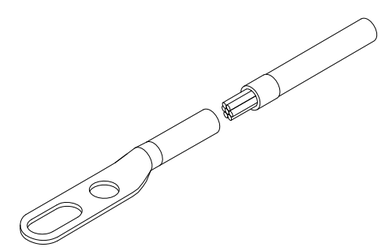

NOTES:
1. CRIMP (COMPRESSION) TYPE TWO-HOLE BOLTED TONGUE CONNECTORS SHALL BE USED TO TERMINATE STRANDED GROUNDING CONDUCTORS. THE CONNECTORS SHALL BE TIN PLATED COPPER, LONG BARREL LUG, AND SHALL BE LISTED FOR THEIR INTENDED USE BY AN NRTL.
   NOTE: TIN PLATED ALUMINUM CONNECTORS INSTALLED PRIOR TO THE DATE OF THIS STANDARD OR CONNECTORS THAT ARE PART OF AN APPROVED PRODUCT ARE ACCEPTABLE.
2. CRIMP TYPE CONNECTORS USED ON SOLID CONDUCTORS MUST BE LISTED BY AN NRTL FOR USE ON SOLID CONDUCTORS, AND MUST BE CRIMPED WITH THE DIES SPECIFIED BY THE MANUFACTURER OF THE CONNECTOR. USE A HYDROLIC CRIMPING TOOL.
3. TWO-HOLE BOLTED TONGUE CONNECTORS SHALL BE USED. WIRES SHALL BE INSERTED THE ENTIRE LENGTH OF THE LUG. ENSURE COAX OUTER INSULATION IS SNUG TO LUG BARREL. PROVIDE AN ANTIOXIDE COMPOUND ON THE CONDUCTOR BEFORE CRIMPING (NO OX). INSTALL A TRANSPARENT HEAT SHRINK INSULATING TUBE ALONG THE ENTIRE LENGTH OF THE CRIMP.
4. USE #6 AWG STRANDED-THOMAS & BETTS 455578 OR EQUIVALENT.
5. USE #2 AWG STRANDED-THOMAS & BETTS 435306 OR EQUIVALENT.

(2) HOLD LB GROUNDING LUG

SCALE N.T.S. | 4

A&E DEVELOPMENT

core
DEVELOPMENT SERVICES
A&E SERVICES
2749 Saturn Street
Brea, California 92821
(714)729-8404 (714)333-4441 fax
www.core.us.com

PROPRIETARY INFORMATION

THE INFORMATION CONTAINED IN THIS SET OF CONSTRUCTION DOCUMENTS IS PROPRIETARY BY NATURE. ANY USE OR DISCLOSURE OTHER THAN THAT WHICH RELATES TO VERIZON WIRELESS IS STRICTLY PROHIBITED.

SITE BUILDER

verizon wireless
15505 SAND CANYON AVENUE
BLDG. D, FIRST FLR.
IRVINE, CALIFORNIA 92618
949.286.7000

SITE INFORMATION

SITE NAME:
SCL FAIRGREEN A1
R.O.W.

SITE ADDRESS

S/S/O
2545 S. GRAYDON AVE.,
MONROVIA, CA 91016

100% ZD's

DATE: 06/22/14

ENGINEERED BY: CORE DEVELOPMENT SERVICES

DRAFTED BY: CORE DEVELOPMENT SERVICES

REVISIONS

REV	DESCRIPTION	DATE/BY
0	ISSUED FOR REVIEW	06/22/14 LO
1	90% ZD'S	07/30/14 LO
2	100% ZD'S	10/10/14 LR

STAMP

SHEET TITLE

GROUNDING DETAILS

SHEET NUMBER

A-6