# BUREAU OF ENGINEERING
# DEPARTMENT OF PUBLIC WORKS
# CITY OF LOS ANGELES
# W.O. SZC11631
# VENICE DUAL FORCE MAIN

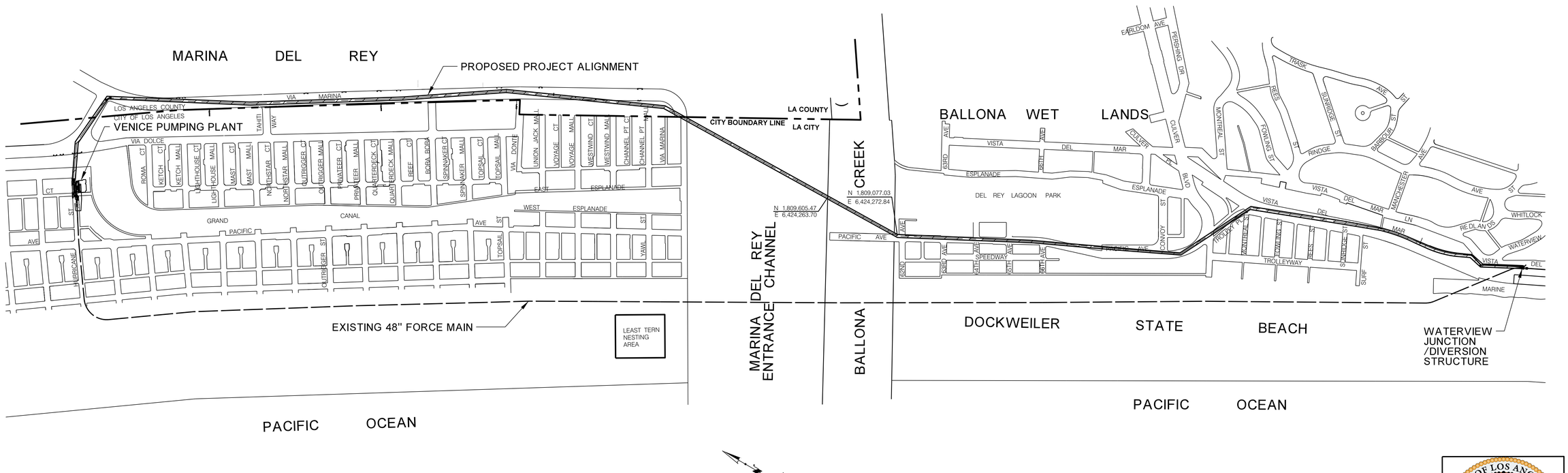


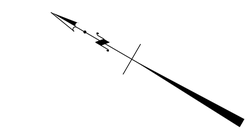

## LOCATION MAP
NOT TO SCALE

PROJECT SITE
(SEE KEY MAP ON SHEET C-1)

CLIENT :
BUREAU OF SANITATION

ENRIQUE C. ZALDIVAR, P.E.
DIRECTOR

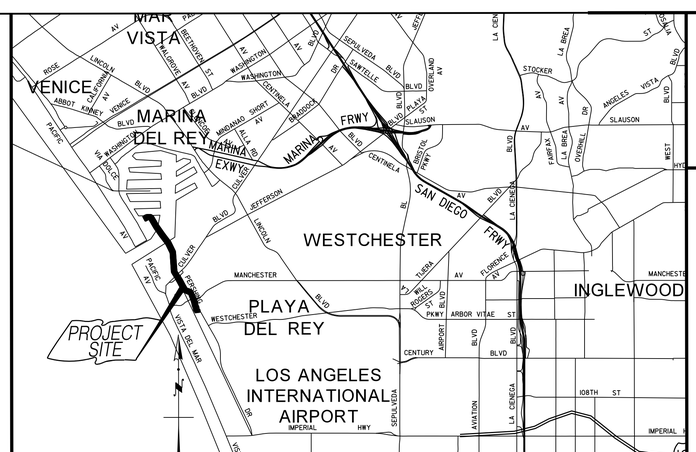


## VICINITY MAP
NOT TO SCALE

## WASTEWATER CONVEYANCE ENGINEERING DIVISION

SAMARA ALI-AHMAD, P.E.
DIVISION ENGINEER

## PROJECT TEAM

**WASTEWATER CONVEYANCE ENGINEERING DIVISION**
- BRAD JENSON, P.E. GROUP MANAGER
- ABID CHOWDHRY, P.E. PROJECT MANAGER
- DARSHNA PATEL, P.E. PROJECT ENGINEER
- ROBERT NUSSBAUM PROJECT ENGINEER
- CAN CHOW ENGINEERING DESIGNER

**WASTEWATER CONVEYANCE CONSTRUCTION DIVISION**
- HARSHAD B. SHAH, P.E. DIVISION ENGINEER

**STRUCTURAL ENGINEERING DIVISION**
- SHAILESH PATEL, S.E. DIVISION ENGINEER
- FARID R BAHER, S.E. SENIOR STRUCTURAL ENGINEER

**GEOTECHNICAL ENGINEERING DIVISION**
- CHRISTOPHER JOHNSON, P.E. GROUP MANAGER

**SURVEY DIVISION**
- TONY PRATT, P.L.S. CHIEF SURVEYOR
- CARLOS LOPEZ SURVEY PARTY CHIEF II

CITY OF LOS ANGELES • DEPARTMENT OF PUBLIC WORKS • BUREAU OF ENGINEERING

LA DPW ENGINEERING TRANSFORMING LOS ANGELES

| NO. | REVISIONS | DATE | BY |
|---|---|---|---|

WORK ACCEPTED — SERIAL NO

CIP NO. AS-BID

INDEX NO

NOT FOR CONSTRUCTION

CITY ENGINEER
GARY LEE MOORE, P.E.

ACCEPTED BY:

DEPUTY CITY ENGINEER/PROGRAM MANAGER — DATE

INTERIM CITY ENGINEER — DATE

VERTICAL CONTROL: NGVD28, 1985 ADJ
HORIZONTAL CONTROL: NAD83, EPOCH 1991.5

SHEET TITLE: COVER SHEET
PROJECT: VENICE DUAL FORCE MAIN
ADDRESS: MARINA DEL REY, CALIFORNIA

WORK ORDER NO. SZC11631
DRAWING NO. R-1
SHEET 1 OF 129

REVISION DATES (DESIGN STAGE ONLY)

FILE: Q:\CAD DATA\SZCxxxxx\szc11631\civil\asbid\vdfmDr1.dgn
DATE: 05-Jun-14 08:41

FILE: Q:\CAD DATA\SZCxxxxx\szc11631\civil\asbid\vdfmDr1.dgn
DATE: 05-Jun-14 08:41B/10/2014 1:48:42 PM

# INDEX TO SHEETS


| NUMBER SHEET | NUMBER DISCIPLINE | TITLE |
|---|---|---|
| | | REFERENCE |
| 1 | R–1 | COVER SHEET |
| 2 | R–2 | INDEX, SYMBOLS, AND ABBREVIATIONS |
| 3 | R–3 | NOTICE TO CONTRACTORS |
| 4 | R–4 | NOTICE TO CONTRACTORS |
| 5 | R–5 | NOTICE TO CONTRACTORS |
| 6 | R–6 | CIS HRYDROGRAPH & ODALOG |
| | | CIVIL |
| 7 | C–1 | KEY MAP |
| 8 | C–2 | PLAN & PROFILE STA. 0+00 TO STA. 4+50 |
| 9 | C–3 | PLAN & PROFILE STA. 4+50 TO STA. 7+50 |
| 10 | C–4 | PLAN & PROFILE STA. 7+50 TO STA. 12+00 |
| 11 | C–5 | PLAN & PROFILE STA. 12+00 TO STA. 17+00 |
| 12 | C–6 | PLAN & PROFILE STA. 17+00 TO STA. 21+30 |
| 13 | C–7 | PLAN & PROFILE STA. 21+30 TO STA. 26+00 |
| 14 | C–8 | PLAN & PROFILE STA. 26+00 TO STA. 31+00 |
| 15 | C–9 | PLAN & PROFILE STA. 31+00 TO STA. 36+00 |
| 16 | C–10 | PLAN & PROFILE STA. 36+00 TO STA. 41+00 |
| 17 | C–11 | PLAN & PROFILE STA. 41+00 TO STA. 45+00 |
| 18 | C–12 | PLAN & PROFILE STA. 45+00 TO STA. 50+00 |
| 19 | C–13 | PLAN & PROFILE STA. 50+00 TO STA. 55+00 |
| 20 | C–14 | PLAN & PROFILE STA. 55+00 TO STA. 60+00 |
| 21 | C–15 | PLAN & PROFILE STA. 60+00 TO STA. 65+00 |
| 22 | C–16 | PLAN & PROFILE STA. 65+00 TO STA. 70+50 |
| 23 | C–17 | PLAN & PROFILE STA. 70+50 TO STA. 75+00 |
| 24 | C–18 | PLAN & PROFILE STA. 75+00 TO STA. 80+00 |
| 25 | C–19 | PLAN & PROFILE STA. 80+00 TO STA. 85+00 |
| 26 | C–20 | PLAN & PROFILE STA. 85+00 TO STA. 90+00 |
| 27 | C–21 | PLAN & PROFILE STA. 90+00 TO STA. 95+00 |
| 28 | C–22 | PLAN & PROFILE STA. 95+00 TO STA. 98+80 |
| 29 | C–23 | PLAN & PROFILE STA. 98+80 TO STA. 103+00 |
| 30 | C–24 | PLAN & PROFILE STA. 103+00 TO STA. 103+93.95 |
| 31 | C–25 | GRAND CANAL WORK SITE |
| 32 | C–26 | NORTH BANK WORK SITE |
| 33 | C–27 | SOUTH BANK WORK SITE |
| 34 | C–28 | BYPASS AT WATERVIEW |
| 35 | C–29 | BYPASS AT WATERVIEW & SECTIONS |
| 36 | C–30 | DIVERSION STRUCTURE AT WATERVIEW–PLAN |
| 37 | C–31 | DIVERSION STRUCTURE AT WATERVIEW–SECTIONS |
| 38 | C–32 | DIVERSION STRUCTURE AT WATERVIEW–SECTION & TOP SLAB |
| 39 | C–33 | AIR RELIEF VALVES & VACUUM VALVES & MAINTENANCE VAULT |
| 40 | C–34 | DETAILS |
| 41 | C–35 | CIRCULAR STEEL CASING SHAFT SUPPORT |
| 42 | C–36 | SECANT PILE WALL SHAFT SUPPORT |
| 43 | C–37 | SLURRY DIAPHRAGM WALL SHAFT SUPPORT |
| 44 | C–38 | STEEL SHEET PILE WALL SHAFT SUPPORT |
| 45 | C–39 | GEOTECHNICAL INSTRUMENTATION |
| 46 | C–40 | PIPE INSTALLATION SECTIONS |
| 47 | C–41 | HYDRAULIC GRADE LINE GRAPHS |
| 48 | C–42 | CARRIER PIPE – REINFORCED CONCRETE CYLINDRICAL PIPE |
| 49 | C–43 | BORING LOGS |
| 50 | C–44 | BORING LOGS |
| 51 | C–45 | 54" FLOWMETER VAULT & PIPE SUPPORT |
| 52 | C–46 | TEMPAPORY 10" WATER LINE RELOCATION |
| | | STRUCTURAL |
| 56 | S–1 | ABBREVIATIONS, DESIGN DATA AND LEGEND |
| 57 | S–2 | STRUCTURAL NOTES |
| 58 | S–3 | STRUCTURAL NOTES |
| 59 | S–4 | TYPICAL DETAILS |
| 60 | S–5 | TYPICAL DETAILS |
| 61 | S–6 | JUNCTION STRUCTURE TOP SLAB PLAN |
| 62 | S–7 | JUNCTION STRUCTURE REINFORCEMENT PLAN–TOP SLAB |
| 63 | S–8 | JUNCTION STRUCTURE PLAN–NEAR SPRINGLINE |
| 64 | S–9 | SECTIONS |
| 65 | S–10 | SECTIONS AND DETAILS |
| 66 | S–11 | SECTIONS AND DETAILS |
| 67 | S–12 | STAINLESS STEEL STOPLOG NOTCH & SS AND/OR STEEL STOPLOG DETAILS |
| 68 | S–13 | GENERAL STRUCTURAL NOTES |
| 69 | S–14 | DEMOLITION ELEVATION |
| 70 | S–15 | EXTERIOR ELEVATIONS |
| 71 | S–16 | STRUCTURAL DETAILS |
| 72 | S–17 | STRUCTURAL DETAILS |

| NUMBER SHEET | NUMBER DISCIPLINE | TITLE |
|---|---|---|
| | | MECHANICAL |
| 73 | M–1 | DEMOLITION /EXISTING CONDITIONS PLAN |
| 74 | M–2 | DEMOLITION /EXISTING AND TEMPORARY CONDITIONS SECTIONS |
| 75 | M–3 | PROPOSED MECHNICAL PLAN |
| 76 | M–4 | PROPOSED MECHNICAL PLAN |
| 77 | M–5 | PROPOSED DESIGN SECTIONS |
| 78 | M–6 | PROPOSED DESIGN SECTIONS |
| 79 | M–7 | MECHANICAL DETAILS |
| 80 | M–8 | MECHANICAL DETAILS |
| 81 | M–9 | MECHANICAL DETAILS |
| 82 | M–10 | MECHANICAL DETAILS |
| | | ELECTRICAL |
| 83 | E–1 | SYMBOLS AND LEGEND INDEX SHEET |
| 84 | E–2 | SYMBOLS AND LEGEND INDEX SHEET |
| 85 | E–3 | ELECTRICAL SITE PLAN |
| 86 | E–4 | ONE LINE DIAGRAM AND MCC ELEVATION |
| 87 | E–5 | SCHEMATIC DIAGRAM |
| 88 | E–6 | GATE ACCESS DETAILS |
| 89 | E–7 | EXISTING PANEL BOARD "LB" |
| 90 | E–8 | ELECTRICAL DETAILS |
| | | INSTRUMENTATION |
| 91 | I–1 | INSTRUMENTATION SYMBOLS AND ABBREVIATIONS |
| 92 | I–2 | INSTRUMENTATION SYMBOLS AND ABBREVIATIONS |
| 93 | I–3 | INSTRUMENTATION SYMBOLS AND ABBREVIATIONS |
| 94 | I–4 | INSTRUMENTATION ABBREVIATIONS |
| 95 | I–5 | VALVE CONTROL AND MONITORING |
| 96 | I–6 | VALVE CONTROL AND MONITORING |
| | | CORROSION PROTECTION |
| 97 | CP–1 | CORROSION PROTECTION DETAILS 1 |
| 98 | CP–2 | CORROSION PROTECTION DETAILS 2 |
| 99 | CP–3 | CORROSION PROTECTION DETAILS 3 |
| | | TRAFFIC CONTROL (VIA MARINA) |
| 100 | TC–1 | TITLE SHEET |
| 101 | TC–2 | STAGE N–0, PANAY WAY TO VIA DONTE |
| 102 | TC–3 | STAGE N–1, PANAY WAY TO VIA DONTE |
| 103 | TC–4 | STAGE N–1, PANAY WAY TO VIA DONTE |
| 104 | TC–5 | STAGE N–1, PANAY WAY TO VIA DONTE |
| 105 | TC–6 | STAGE N–2, PANAY WAY TO VIA DONTE |
| 106 | TC–7 | STAGE N–2, PANAY WAY TO VIA DONTE |
| 107 | TC–8 | STAGE N–2, PANAY WAY TO VIA DONTE |
| 108 | TC–9 | STAGE N–2, PANAY WAY TO VIA DONTE |
| | | TRAFFIC CONTROL (PACIFIC AVE) |
| 109 | TC–10 | TITLE SHEET |
| 110 | TC–11 | STAGE S–1, 62nd ST. TO 65th ST. |
| 111 | TC–12 | STAGE S–2, 62nd ST. TO VISTA DEL MAR |
| 112 | TC–13 | STAGE S–2, 62nd ST. TO VISTA DEL MAR |
| 113 | TC–14 | STAGE S–3, 62nd ST. TO PALACE ST. |
| 114 | TC–15 | STAGE S–3, 62nd ST. TO PALACE ST. |
| 115 | TC–16 | STAGE S–3, 62nd ST. TO PALACE ST. |
| 116 | TC–17 | STAGE S–3, 62nd ST. TO PALACE ST. |
| 117 | TC–18 | STAGE S–3, 62nd ST. TO PALACE ST. |
| 118 | TC–19 | STAGE S–4, 62nd ST. TO PALACE ST. |
| 119 | TC–20 | STAGE S–4, 62nd ST. TO PALACE ST. |
| 120 | TC–21 | STAGE S–4, 62nd ST. TO PALACE ST. |
| 121 | TC–22 | STAGE S–4, 62nd ST. TO PALACE ST. |
| 122 | TC–23 | STAGE S–5, 62nd ST. TO PALACE ST. |
| 123 | TC–24 | STAGE S–5, 62nd ST. TO PALACE ST. |
| 124 | TC–25 | STAGE S–5, 62nd ST. TO PALACE ST. |
| 125 | PD–1 | STRIPING, 62nd ST. TO PALACE ST. |
| 126 | PD–2 | STRIPING, 62nd ST. TO PALACE ST. |
| 127 | PD–3 | STRIPING, 62nd ST. TO PALACE ST. |
| 128 | PD–4 | STRIPING, 62nd ST. TO PALACE ST. |
| 129 | PD–5 | STRIPING, 62nd ST. TO PALACE ST. |


## REFERENCED PLANS

D–404
D–451
D–171
D–1267
D–2252
D–3069
D–4282
D–8437
D–13360
D–13639
D–13394
D–22975
D–23346
D–24483
D–26216
D–29935
D–30352
DL–467
P.C 3668
P.C 3682
C.C 8216
P.C 10063
10819
21058
18872

## ABBREVIATIONS

| | |
|---|---|
| **A** | |
| ABAND | ABANDONED |
| AC | ASPHALT CONCRETE |
| ACI | AMERICAN CONCRETE INSTITUTE |
| & | AND |
| ASST | ASSISTANT |
| ASTM | AMERICAN SOCIETY FOR TESTING |
| AVE | AVENUE |
| **B** | |
| BLVD | BOULEVARD |
| BM | BENCH MARK |
| **C** | |
| CAL | CALIFORNIA |
| CB | CATCH BASIN |
| CFS | CUBIC FEET PER SECOND |
| CI (P) | CAST IRON (PIPE) |
| CIS | COASTAL INTERCEPTOR SEWER |
| ℄ | CENTERLINE |
| CLF | CHAIN LINK FENCE |
| CLR | CLEAR, CLEARANCE |
| CF | CURB FACE |
| CONC | CONCRETE |
| CONST | CONSTRUCT, CONSTRUCTION |
| CONT | CONTINUOUS, CONTINUATION, CONTROL |
| **D** | |
| DIA, Ø | DIAMETER |
| DIV | DIVERSION, DIVISION |
| DIST | DISTRICT |
| DI(P) | DUCTILE IRON (PIPE) |
| DWG(S) | DRAWING(S) |
| DWPPS | DEPARTMENT OF WATER AND POWER POWER SERVICE |
| DWPWS | DEPARTMENT OF WATER AND POWER WATER SERVICE |
| **E** | |
| E | EAST |
| ELC | ELECTROLIER (STREET LIGHT) |
| EL, ELEV | ELEVATION |
| ELEC | ELECTRIC |
| EMBED | EMBEDMENT |
| ENGR | ENGINEER |
| E/O | EAST OF |
| E/W | EAST OF WEST PROPERTY LINE |
| EX | EXISTING |
| **F** | |
| FH | FIRE HYDRANT |
| FT | FOOT, FEET |
| FL | FLOW LINE |
| FLEX | FLEXIBLE |
| FWY | FREEWAY |
| **G** | |
| GM | GAS METER |
| GPM | GALLONS PER MINUTE |
| GV | GATE VALVE |
| **H** | |
| HC | HOUSE CONNECTION (6" UNLESS OTHERWISE NOTED) |
| HORIZ | HORIZONTAL |
| **I** | |
| ID | INSIDE DIAMETER |
| IN | INCHES |
| INV | INVERT |
| I.E. | INVERT ELEVATION |
| **J** | |
| JS | JUNCTION STRUCTURE |
| JT | JOINT |
| **L** | |
| LF | LINEAL FEET |
| LG | LENGTH, LONG |
| LADOT | LOS ANGELES DEPARTMENT OF TRANSPORTATION |
| **M** | |
| MAX | MAXIMUM |
| MCC | MOTOR CONTROL CENTER |
| MECH | MECHANICAL |
| MH | MAINTENANCE HOLE |
| MIN | MINIMUM |
| **N** | |
| N | NORTH, MANNING'S N FACTOR |
| N/O | NORTH OF |
| N/S | NORTH OF SOUTH PROPERTY LINE |
| NO | NUMBER |
| NOS | NORTH OUTFALL SEWER |
| **O** | |
| OD | OUTSIDE DIAMETER |
| OLS | OVERHEAD LIGHT STANDARD |
| OSHA | OCCUPATIONAL SAFTEY AND HEALTH ADMINISTRATION |
| **P** | |
| PB | PULL BOX |
| PCF | POUNDS PER CUBIC FOOT |
| PI | POINT OF INTERSECTION |
| ℙ | PROPERTY LINE, PLATE |
| POC | POINT OF CONNECTION |
| PP | POWER POLE |
| PSF | POUNDS PER SQUARE FOOT |
| PSI | POUNDS PER SQUARE INCH |
| PT&T | TELEPHONE, PACIFIC BELL, PACIFIC TELEPHONE AND TELEGRAPH |
| PVC | POLYVINYL CHLORIDE |
| PVMT | PAVEMENT |
| **Q** | |
| Q | FLOW RATE |
| **R** | |
| R | RADIUS |
| R/W | RIGHT OF WAY |
| RCP | REINFORCED CONCRETE PIPE |
| REV | REVISION, REVISED, REVERSED |
| RD | ROAD |
| **S** | |
| S | SOUTH, SLOPE |
| SCG | SOUTHERN CALIFORNIA GAS |
| SD | STORM DRAIN |
| STD PLAN | STANDARD PLAN |
| SHT | SHEET |
| SPEC(S) | SPECIFICATION(S) |
| S/N | SOUTH OF NORTH PROPERTY LINE |
| S/O | SOUTH OF |
| SPK | NAIL SPIKE |
| SQ | SQUARE |
| SS | SANITARY SEWER |
| SSFM | SANITARY SEWER FORCE MAIN |
| SSPWC | STANDARD SPECIFICATIONS FOR PUBLIC WORKS CONSTRUCTION |
| ST | STREET |
| STA | STATION |
| STD | STANDARD |
| STL | STEEL |
| **T** | |
| T | TELEPHONE, TELEPHONE VAULT |
| TC | TOP OF CURB |
| TEL | TELEPHONE, TELESCOPING |
| THK | THICKNESS |
| TMH | TRAP MAINTENANCE HOLE |
| TS | CATHODIC PROTECTION TEST STATION |
| TYP | TYPICAL |
| **U** | |
| UBC | UNIFORM BUILDING CODE (INCLUDING LOS ANGELES CITY ADDITIONS) |
| **V** | |
| VAR | VARIES , VARIABLE |
| VCP | VITRIFIED CLAY PIPE |
| VERT | VERTICAL |
| V.O.S. | VICTORY OIL CO. |
| **W** | |
| W | WEST |
| W/ | WITH |
| W/E | WEST OF EAST PROPERTY LINE |
| WM | WATER METER |
| WO | WORK ORDER |
| W/O | WITHOUT, WEST OF |
| WV | WATER VALVE |
| **X** | |
| X | BY, TIMES |

NOTE:
THIS IS A GENERAL ABBREVIATION LIST NOT ALL ABBREVIATIONS MAY BE USED IN THESE DRAWINGS.

## STANDARD PLANS REQUIRED FOR THIS PROJECT

(ALL STANDARDS SHALL CONFORM TO THE LATEST EDITION OR REVISION)

| | |
|---|---|
| S–251–1 | PIPE LAYING IN TRENCHES |
| S–253–0 | SUPPORTS FOR STORM DRAIN AND SEWER PIPES ACROSS TRENCHES |
| S–254–1 | TUNNEL AND JACKED CASING DETAILS |
| S–255–1 | BLANKET PROTECTION FOR PIPES |
| S–410–2 | TYPES OF CURB AND GUTTER |
| S–430–1 | JOINTS IN CONCRETE PAVEMENT |
| S–610–21 | NOTICE TO CONTRACTORS – COMPREHENSIVE |
| S–791– | ADVANCE CONSTRUCTION NOTICE SIGNS |

DESIGN DISCIPLINE → R-1 ← SHEET NUMBER

### INDEX OF DISCIPLINES

R = REFERENCE
C = CIVIL
S = STRUCTURAL
E = ELECTRICAL
I = INSTRUMENTATION
TC = TRAFFIC CONTROL
M = MECHANICAL
CP = CORROSION PROTECTION

REVISION DATES (DESIGN STAGE ONLY)

FILE: Q:\CAD DATA\SZCxxxxx\szc11631\civil\asbid\vdfmDr2.dgn
DATE: 09–Jul–14 08:54

CITY OF LOS ANGELES • DEPARTMENT OF PUBLIC WORKS • BUREAU OF ENGINEERING

LA DPW ENGINEERING TRANSFORMING LOS ANGELES

| REVISIONS | | | |
|---|---|---|---|
| NO. | DATE | BY: | |

CIP NO. AS–BID

NOT FOR CONSTRUCTION

CITY ENGINEER: GARY LEE MOORE, P.E.

| DESIGN GROUP | | DATE |
|---|---|---|
| ENGINEER: | SEAN ZAHEDI/DARSHNA PATEL LIC. NO. C–75974 | 07–14 |
| DESIGNED BY: | DARSHNA PATEL, CAN CHOW | 07–14 |
| DRAWN BY: | CAN CHOW, HIEP LAM | 07–14 |
| CHECKED BY: | ABID CHOWDHRY, P.E. | 07–14 |
| APPROVED BY: | BRAD JENSON, P.E. | 07–14 |

VERTICAL CONTROL: NGVD29 1985 ADJ.
HORIZONTAL CONTROL: NAD83, EPOCH 1991.5

SHEET TITLE: INDEX, SYMBOLS AND ABBREVIATIONS
PROJECT: VENICE DUAL FORCE MAIN
ADDRESS: MARINA DEL REY, CALIFORNIA

WORK ORDER NO. SZC11631
DRAWING NO. R–2
SHEET 2

# NOTICE TO CONTRACTORS

1. UNLESS OTHERWISE INDICATED IN THE PLANS & SPECIFICATIONS, ALL WORK SHALL CONFORM TO THE LATEST EDITION AND SUPPLEMENTS OF THE STANDARD SPECIFICATIONS FOR PUBLIC WORKS CONSTRUCTION (SSPWC) (GREENBOOK, PART 2 THROUGH PART 6) ADOPTED BY THE BOARD OF PUBLIC WORKS OF THE CITY OF LOS ANGELES AS MODIFIED BY THE CORRESPONDING ISSUE OF THE BROWN BOOK.

2. PRIOR TO ACCESSING OR WITHDRAWING WATER FROM ANY PUBLIC UTILITY HYDRANT, THE CONTRACTOR SHALL APPLY FOR AND RECEIVE PERMISSION TO PURCHASE WATER. THE CONTRACTOR SHALL ARRANGE TO OBTAIN AND HAVE INSTALLED A FIRE HYDRANT WATER METER. COST OF OBTAINING, OPERATING AND REMOVAL OF WATER METER SHALL BE INCLUDED IN THE BID.

3. ELEVATIONS SHOWN ON THESE PLANS BASED ON NGVD 88 DATUM.

4. THIS IMPROVEMENT CONSISTS OF WORK CALLED FOR ONLY ON THIS PLAN. THE PLAN REFERS TO THE CONTRACT DRAWINGS, SPECIFICATIONS, AND SCHEDULE OF WORK INCLUDED HEREIN.

5. THE CONTRACTOR SHALL VERIFY ALL DIMENSIONS AND CONDITIONS IN THE FIELD BEFORE STARTING WORK, AND SHALL NOTIFY THE ENGINEER IMMEDIATELY OF ANY DISCREPANCIES.

6. THE ENGINEER DOES NOT WARRANT THE ACCURACY OF SCALED DIMENSIONS ON THE PLANS. THE LOCATIONS OF EXISTING UTILITIES AND SUBSTRUCTURES SHOWN HEREON HAVE BEEN TAKEN FROM RECORD DRAWINGS. THE CITY ENGINEER DOES NOT WARRANT THE COMPLETENESS OR CORRECTNSS OF THE LOCATIONS. IT SHALL BE THE CONTRACTOR'S RESPONSIBILITY TO LOCATE ALL UNDERGROUND FACILITIES, WHETHER SHOWN HEREIN OR NOT, BEFORE COMMENCING WORK, AND PROTECT THEM FROM DAMAGE, SHOULD UTILITIES BE ENCOUNTERED THAT ARE NOT INDICATED, NOTIFY THE ENGINEER IMMEDIATELY. THE REMOVAL OF INTERFERING ABANDONED IN PLACE SUBSTRUCTURES SHALL BE THE RESPONSIBILITY OF THE CONTRACTOR. MARK ALL HIGH VOLTAGE ELECTRICAL SERVICES WITH PROPER WARNING SIGNS AND BARRICADES.

7. ATTENTION IS DIRECTED TO THE "INSTRUCTION TO BIDDERS" WHERE BIDDERS ARE REQUIRED TO EXAMINE AND JUDGE, AS THEIR OWN RESPONSIBILITY, THE LOCATION, PHYSICAL CONDITIONS, AND SURROUNDING OF THE PROPOSED WORK.

8. LOCATION AND DEPTH-OF-COVER INFORMATION FOR MAINLINE SEWERS AND EXISTING SUBSTRUCTURES SHOWN ON THE PLANS ARE SPECIFIED WITHIN HORIZONTAL AND VERTICAL TOLERANCES OF +/- 2 FT BASED ON BEST AVAILABLE INFORMATION. THE CONTRACTOR SHALL BEAR ULTIMATE RESPONSIBILITY FOR FIELD VERIFICATION OF MAINLINE SEWER AND UTILITY LOCATION AND DEPTH INFORMATION.

9. THE CONTRACTOR SHALL BE RESPONSIBLE FOR UTILITIES SHOWN ON THE PLANS REGARDLESS OF WHETHER THEY ARE MARKED BY THE UTILITY COMPANIES. THE CONTRACTOR SHALL ALSO ASSUME THAT EVERY PROPERTY/PARCEL IS SERVED BY A SERVICE CONNECTION FROM EACH MAIN UTILITY DISTRIBUTION CONDUIT SHOWN ON THE PLANS.

10. THE CONTRACTOR IS REQUIRED TO CONTACT UNDERGROUND SERVICE ALERT AT 811 FOR UPDATED UTILITY MARKINGS. NO CHANGE ORDER WILL BE ISSUED FOR UNMARKED OR MISMARKED UTILITIES; THE CONTRACTOR IS DIRECTED TO PURSUE RESPECTIVE UTILITIES FOR ANY REQUIRED COMPENSATION.

11. TIME AND INFORMATION TYPE CONSTRUCTION NOTICE SIGNS (4 EACH) PER STANDARD PLAN S-791-1 ARE REQUIRED ON THIS PROJECT. THREE (3) TYPE 1 CREDIT SIGNS PER S-791-1 ARE ALSO REQUIRED ; THE CITY INSPECTOR WILL DETERMINE APPROPRIATE LOCATIONS. THE TELEPHONE NUMBER FOR THE "INFORMATION" SIGN AND INFORMATION FOR THE "CREDIT" AND "TIME" SIGNS WILL BE FURNISHED AT THE TIME OF CONSTRUCTION.

12. THE CONTRACTOR SHALL GIVE REASONABLE NOTICE TO OWNERS OR OCCUPANTS OF PROPERTIES FRONTING THE PROPOSED IMPROVEMENT, PER SECTION 001120 OF GENERAL REQUIREMENT. THE CONTRACTOR SHALL OBTAIN A CITY APPROVED "NOTICE OF PROPOSED SEWER WORK" FROM THE ENGINEER AND DISTRIBUTE COPIES NO LATER THAN 10 CALENDAR DAYS PRIOR TO COMMENCEMENT OF CONSTRUCTION IN ACCORDANCE WITH SSPWC 7-10.1 AS MODIFIED BY BROWN BOOK. NOTICES ARE NOT TO BE PLACED IN OR ATTACHED TO MAIL BOXES.

13. THE CONTRACTOR SHALL COMPLY WITH THE PROVISIONS OF THE POLLUTION CONTROL - SEWAGE SPILL PREVENTION AND RESPONSE REQUIREMENTS AND THE BOARD OF PUBLIC WORKS' POLICY OF "ZERO SPILLS" REQUIREMENTS AS SET FORTH IN SECTION 01563 OF THE GENERAL REQUIREMENTS.

14. INSPECTION: CONTACT THE BUREAU OF CONTRACT ADMINISTRATION, METROPOLITAN DISPATCH AT (213) 485-5080, BEFORE 12:00 NOON OF THE WORKING DAY PRIOR TO WHEN ACTUAL WORK IN THE FIELD WILL BEGIN TO ARRANGE FOR PROJECT INSPECTION.

15. THE CONTRACTOR SHALL BE RESPONSIBLE FOR OBTAINING NIGHT WORK PERMIT FROM POLICE DEPARTMENT.

16. CASE 1 BEDDING PER STANDARD PLAN S-251-1 SHALL BE PLACED IN ALL TRENCHES UNLESS OTHERWISE INDICATED ON THE PLANS.

17. TEMPORARY EXCAVATION, SUBGRADE PREPARATION, PIPE BEDDING, FILL AND BACKFILL, ETC. SHALL BE PERFORMED PER REQUIREMENTS IN THE TECHNICAL SPECIFICATIONS.

18. PAYMENT ADJUSTMENT FOR PAVEMENT THICKNESS WILL BE PER STANDARD SPECIFICATIONS FOR PUBLIC WORKS CONSTRUCTION (SSPWC) SECTION 300-1.4, AS MODIFIED BY THE BROWN BOOK.

PERMANENT RESURFACING:

19. A. UNLESS OTHERWISE SPECIFIED IN THE CONTRACT DOCUMENTS, PERMANENT RESURFACING SHALL BE IN ACCORDANCE WITH SECTION 306-1.5.2 OF THE LATEST BROWN BOOK, EXCEPT THAT THE PAVEMENT THICKNESS SHALL BE IN ACCORDANCE WITH THE FOLLOWING TABLE:

| CURB-TO-CURB STREET WIDTH | PAVEMENT THICKNESS |
|---|---|
| LESS THAN 44 FEET | 6-INCH AC ON 4-INCH CMB |
| 44 TO 66 FEET | 6-INCH AC ON 6-INCH CMB |
| 68 TO 84 FEET | 8-INCH AC ON 8-INCH CMB |

B. WHERE SLURRY BACKFILL IS PERMITTED BY THE PROJECT ENGINEER, THE BACKFILL SHALL BE PLACED TO PAVING LEVEL WITH NO BASE MATERIAL REQUIRED.

C. IT IS THE CONTRACTOR'S RESPONSIBILITY TO FIELD CHECK THE JOB SITE COMPLETELY AND TO IDENTIFY ALL CONCRETE CROSS GUTTER, CURB & GUTTER, SIDEWALKS, DRIVEWAYS, BUSPADS, APRONS, AND MISCELLANEOUS CONCRETE STRUCTURES AFFECTED BY THE SPECIFIED SEWER CONSTRUCTION. WHERE REMOVAL AND RECONSTRUCTION OF SUCH CONCRETE STRUCTURES IS NECESSARY FOR SEWER CONSTRUCTION, COST FOR SUCH REMOVAL AND RECONSTRUCTION SHALL BE INCLUDED IN THE UNIT COST FOR PIPE INSTALLATION.

20. SUBSTRUCTURE LOCATIONS SHOWN ON THE PLANS ARE APPROXIMATE. THE CONTRACTOR SHALL VERIFY THE LOCATION OF ALL EXISTING UTILITIES AND PROVIDE ADEQUATE SUPPORT TO ALL UTILITIES IN COMPLIANCE WITH RESPECTIVE UTILITY OWNER REQUIREMENTS. THE CONTRACTOR SHALL NOTIFY AND REQUEST DIRECTION FROM THE ENGINEER WHEN UTILITIES WHICH ARE NOT SHOWN ON THE PLANS ARE LOCATED.

21. THE CONTRACTOR IS REQUIRED TO SAWCUT EXISTING PAVEMENT IN OPEN-TRENCH OPERATION ALONG THE ALIGNMENT OF THE SEWER OR ANY OTHER TYPE OF OPERATION WHERE EXISTING PAVEMENT HAS TO BE REMOVED. STOMPING IS NOT ALLOWED.

22. THE CONTRACTOR SHALL OBTAIN REQUIRED PERMITS FROM THE CALIFORNIA DIVISION OF INDUSTRIAL SAFETY FOR CONSTRUCTION OF TRENCHES AND EXCAVATIONS OVER FIVE FEET DEEP. THE CONTRACTOR SHALL SUBMIT PROOF OF PERMIT TO THE INSPECTOR.

23. THE CONTRACTOR SHALL COMPLY WITH ALL APPLICABLE RULES AND REGULATIONS. SAFETY IS THE SOLE RESPONSIBILITY OF THE CONTRACTOR.

24. THE CONTRACTOR SHALL BE RESPONSIBLE FOR CONTROLLING GROUNDWATER ENCOUNTERED DURING CONSTRUCTION.

25. THE CONTRACTOR SHALL BE SOLELY RESPONSIBLE FOR THE PROPER DESIGN, CONSTRUCTION, AND SUCCESSFUL OPERATION OF THE SEWAGE SYSTEM. THE CONTRACTOR SHALL SUBMIT SHOP DRAWINGS, OPERATION AND SPILL CONTINGENCY PLANS TO THE ENGINEER FOR APPROVAL.

26. SEWAGE SERVICE REQUIREMENTS:

THE CONTRACTOR SHALL BE SOLELY RESPONSIBLE FOR PROPER DESIGN, CONSTRUCTION, AND OPERATION OF ALL BYPASS SYSTEMS REQUIRED TO CONVEY ALL SEWAGE. THE CITY OF LOS ANGELES SHALL HAVE NO LIABILITY WHATSOEVER CONCERNING THE BYPASS SYSTEM(S). IN THE EVENT THAT THE BYPASS SYSTEM(S) FAIL(S) FOR ANY CAUSE WHATSOEVER, THE CONTRACTOR SHALL BE LIABLE FOR ANY AND ALL DAMAGES OF ANY KIND RESULTING FROM SUCH FAILURE, INCLUDING, BUT NOT LIMITED TO CIVIL FINES, OR PENALTIES IMPOSED BY REGULATORY AGENCIES, THIRD PARTY PROPERTY DAMAGES, DELAY COSTS OF ANY KIND, AND ALL KINDS. THE CONTRACTOR SHALL SUBMIT SHOP DRAWINGS, BYPASS FAILURE, AND SPILL CONTINGENCY PLANS TO THE ENGINEER, AND SHALL RECEIVE APPROVAL PRIOR TO CONSTRUCTION OF THE BYPASS SYSTEM(S).

THE CONTRACTOR SHALL PROVIDE ALL NECESSARY BYPASSING EQUIPMENT, INCLUDING, BUT NOT LIMITED TO PUMPS, HOT TAPS, BYPASS PIPING AND PIPE SUPPORT SYSTEMS, PIPE SUPPORT STRUCTURES, ODOR SCRUBBERS AND TEMPORARY POWER AS NECESSARY FOR MAINTAINING CONTINUOUS FLOW OF SEWAGE AT ALL TIMES.

THE CONTRACTOR SHALL SUBMIT BYPASSING PLAN FOR THE ENGINEER'S APPROVAL. THE PLAN SHALL CONSIST OF DETAILED INSTRUCTIONS AND DRAWINGS SHOWING THE BYPASS PLAN, MATERIALS OF FABRICATION, EQUIPMENT USED, BYPASS SEQUENCING, CONNECTION PROCEDURES AND ALL SHUTDOWNS PERIODS.

THE CONTRACTOR SHALL, AS PART OF THE BYPASS PLAN, SUBMIT AN EMERGENCY PROCEDURE TO HANDLE A PIPE RUPTURE AND/OR SEWAGE SPILL AS A RESULT OF THE HOT TAPPING/LINE STOP PROCEDURES. THE EMERGENCY PROCEDURE SHALL BE APPROVED BY THE ENGINEER.

FLOW REQUIREMENTS: UNLESS OTHERWISE NOTED ON THE DRAWING, THE CONTRACTOR SHALL DESIGN THE BYPASS SYSTEM(S) FOR THE COASTAL INTERCEPTOR SEWER (CIS) TO PROVIDE A MINIMUM OF 30,000 GALLONS PER MINUTE (GPM), EXISTING PEAK DRY WEATHER FLOW FOR WORK TO BE PERFORMED BETWEEN APIRL 15 TO OCTOBER 15. THE CONTRACTOR SHALL ANTICIPATE AN EXISTING PEAK WET WEATHER FLOW UP TO 45,000 GPM.SEE HYDROGRAPH FOR CIS ON SHEET R-6.

THE CONTRACTOR IS DIRECTED TO PERFORM ALL BYPASSING WORK DURING LOW FLOW CONDITIONS. CONTRACTOR SHALL NOT START BYPASSING OPERATIONS EARLIER THAN APRIL 15 AND SHALL ATTEMPT TO COMPLETE ALL WORK IN THE SAID AREA NO LATER THAN OCTOBER 15, UNLESS OTHERWISE APPROVED BY THE ENGINEER.

ALL TEMPORARY BYPASSING SHALL BE OF A SUFFICIENT SIZE SO AS NOT TO IMPEDE FLOW AND TO MAINTAIN A MINIMUM VELOCITY OF 3 FEET PER SECOND (FPS) AND A MAXIMUM VELOCITY OF 10 FPS. ALL PIPING SHALL BE PROVIDED WITH ADEQUATE STRUCTURAL SUPPORTS, THRUST BLOCKS, AND BRACING. THE CONTRACTOR SHALL PROVIDE ALL VALVES, FITTINGS AND OTHER PIPING APPURTENANCES FOR THE BYPASS PIPING.

THE CONTRACTOR SHALL BE RESPONSIBILE FOR MAINTAINING THE FLOW OF TRAFFIC DURING ALL BYPASS OPERATIONS AND IMPLEMENTATION OF THE BYPASS SYSTEM AS REQUIRED BY THE LOS ANGELES DEPARTMENT OF TRANSPORTATION (LADOT) AND ALL APPLICABLE STANDARDS. THE CONTRACTOR SHALL INSTALL ALL NECESSARY TEMPORARY LIGHTING, WARNING BEACONS, FLAGPERSONS, SAFETY DEVICES, K-RAIL, AND EQUIPMENT FOR TRAFFIC DIVERSION AND PROTECTION OF THE CONSTRUCTION AREA. THE CONTRACTOR SHALL SUBMIT A TRAFFIC CONTROL PLAN TO THE ENGINEER FOR REVIEW AND APPROVAL.

THE CONTRACTOR IS HEREBY INFORMED THAT SHOULD IT BE NECESSARY TO INSTALL PORTIONS OF THE TEMPORARY BYPASS PIPING BELOW GRADE, IN ORDER TO ALLOW CONTINUOUS FLOW OF VEHICULAR TRAFFIC, IT SHALL BE THE SOLE RESPONSIBILITY OF THE CONTRACTOR TO LOCATE AND POTHOLE ALL PROPOSED ROUTINGS FOR BELOW GRADE BYPASS PIPING, PRIOR TO SUBMITTAL OF BYPASS PIPE ROUTINGS. THE CONTRACTOR SHALL BE RESPONSIBLE FOR PROTECTION OF ALL UTILITIES, SUBSTRUCTURES, AND PIPELINES, ETC. LOCATED IN THE VICINITY OF THE BYPASS PIPING.

THE CONTRACTOR SHALL PROVIDE MONITORING OF THE BYPASSING TO SUCH A DEGREE THAT NO SEWAGE SPILLS WILL OCCUR. IF THE CONTRACTOR, THROUGH DIRECT OR INDIRECT ACTION, HAS CAUSED A SEWAGE SPILL, OR THROUGH NEGLECT ALLOWS A SEWAGE SPILL TO OCCUR THE CONTRACTOR SHALL BE RESPONSIBILE FOR ALL FINES AND PENALTIES IMPOSED BY THE REGIONAL WATER QUALITY CONTROL BOARD, ENVIRONMENTAL PROTECTION AGENCY, SOURTHERN CALIFORNIA COASTAL COMMISSION AND/OR LOCAL GOVERNING AUTHORITY.

SEWAGE SPILLS SHALL BE AS MEASURED BY THE ENGINEER. THE FLOW IN THE PIPE AT THE TIME OF THE SPILL AND THE LENGTH OF TIME OF THE SPILL SHALL BE USED IN THE DETERMINATION OF THE TOTAL VOLUME OF THE SPILL.

THE CONTRACTOR SHALL BE RESPONSIBLE FOR OPERATING AND MAINTAINING BYPASS SYSTEM (S) FOR TWENTY-FOUR (24) HOURS A DAY, SEVEN (7) DAYS A WEEK AT NO EXTRA COST TO THE CITY.

ALL EXISTING SEWERS, HOUSE CONNECTION SEWERS, AND STORM DRAINS THAT CROSS PROPOSED SEWER TRENCH SHALL BE SUPPORTED IN ACCORDANCE WITH STANDARD PLAN S-253-0. THE COST OF SUPPORTING THE SEWERS, HOUSE CONNECTION SEWERS, AND STORM DRAINS SHALL BE INCLUDED IN THE BID PRICE FOR PIPE INSTALLATION. THE CONTRACTOR SHALL SUBMIT CALCULATIONS AND DRAWINGS OF SUPPORT FOR LARGE UTILITIES & STRUCTURES FOR APPROVAL BY THE ENGINEER.

THE CONTRACTOR SHALL PERFORM PRE AND POST CLOSED-CIRCUIT TELEVISION (CCTV) INSPECTION OF CITY'S AND COUNTY'S SEWER LINES. ANY DAMAGE TO SEWER LINES, WOULD REQUIRE RECONSTRUCTION TO THE SATISFACTION OF THE DEPARTMENT OF LA CITY PUBLIC WORKS AND LA COUNTY PUBLIC WORKS.

(CONTINUED ON SHEET R-4)

REVISION DATES (DESIGN STAGE ONLY)

CITY OF LOS ANGELES • DEPARTMENT OF PUBLIC WORKS • BUREAU OF ENGINEERING

LA DPW ENGINEERING TRANSFORMING LOS ANGELES

| NO. | REVISIONS | DATE | BY: |
|---|---|---|---|

CIP NO. AS-BID

GARY LEE MOORE, P.E. CITY ENGINEER

DESIGN GROUP

ENGINEER: SEAN ZAHEDI/DARSHNA PATEL LIC. NO. C-75974 07-14

DESIGNED BY: DARSHNA PATEL, CAN CHOW 07-14

DRAWN BY: CAN CHOW, HIEP LAM 07-14

CHECKED BY: ABID CHOWDHRY, P.E. 07-14

APPROVED BY: BRAD JENSON, P.E. 07-14

VERTICAL CONTROL: NGVD29, 1985 ADJ.
HORIZONTAL CONTROL: NAD83, EPOCH 1991.5

SHEET TITLE: NOTICE TO CONTRACTORS

PROJECT: VENICE DUAL FORCE MAIN

ADDRESS: MARINA DEL REY, CALIFORNIA

WORK ORDER NO. SZC11631

DRAWING NO. R-3

SHEET 3

NOT FOR CONSTRUCTION

FILE: Q:\CAD DATA\SZCxxxxx\szc11631\civil\asbid\vdfmDr3.dgn
DATE: 13-Aug-14 12:50

## NOTICE TO CONTRACTORS (CONTINUED)

27. UPON COMPLETION OF VENICE DUAL FORCE MAIN PIPE SEGMENTS IN CUT AND COVER PORTION AND COMPLETION OF WORK AT EACH PIT LOCATION, STREET SHALL BE OPENED TO TRAFFIC WITHIN 2 DAYS AND PERMANENT RESURFACING (BASE PAVEMENT) SHALL BE PLACED WITHIN 14 CALENDAR DAYS.

28. TRENCHING:

ALL TRENCH EXCAVATION, PIPE INSTALLATION, BACKFILLING AND PAVEMENT RESURFACING SHALL BE IN ACCORDANCE WITH THE CONTRACT SPECIFICATIONS, SECTION 306-1 OF THE SSPWC, AND PER STD. PLAN S-251-1. THE MORE STRINGENT CONDITIONS SHALL APPLY.

PIPE BEDDING FOR BELOW GROUNDWATER TABLE INSTALLATION INSIDE PIT/SHAFT SHALL BE IN ACCORDANCE WITH THE REQUIREMENTS IN THE SPECIFICATION. FOR DRY INSTALLATIONS ALONG TRENCHES, CASE IV BEDDING PER STANDARD PLAN S-251-1 SHALL BE USED FOR THE INVERT ELEVATIONS LESS THAN TEN FEET BELOW STREET SURFACE. FOR INVERT ELEVATIONS GREATER THAN 10 FEET BELOW STREET SURFACE, CASE II BEDDING SHALL BE USED WITH THE EXCEPTION OF UTILITY CROSSINGS WHERE CASE IV BEDDING SHALL BE USED. SEE DRAWINGS FOR LIMITS.

WHERE MORE THAN 2 FEET OF STANDING WATER IS OBSERVED AT THE TRENCH BOTTOM, TRENCH SHALL BE DEWATERED BEFORE THE PIPE IS LAID. CONTRACTOR SHALL PROVIDE AND MAINTAIN MEANS AND DEVICES TO PERFORM DEWATERING WORK. CONTRACTOR SHALL DISPOSE OF THE WATER IN A MANNER TO PREVENT DAMAGE TO THE ADJACENT PROPERTY AND IN ACCORDANCE WITH REGULATORY AGENCY REQUIREMENTS.

29. UTILITIES:

THE CONTRACTOR SHALL SUPPORT ALL UTILITIES UNCOVERED DURING EXCAVATION FOR THE PROJECT. THE CONTRACTOR SHALL SUBMIT FOR APPROVAL, TO THE ENGINEER, ALL SUPPORTING METHODOLOGIES.

THE CONTRACTOR, IN CONFORMANCE TO THE LOS ANGELES CITY ORDINANCE NO. 150,478, SHALL POTHOLE EXISTING SUBSURFACE INSTALLATIONS CARRYING UNSTABLE SUBSTANCES TO DETERMINE THEIR LOCATIONS AND ELEVATIONS PRIOR TO COMMENCING EXCAVATION. BEFORE COMMENCING ANY EXCAVATION, THE CONTRACTOR SHALL OBTAIN AN UNDERGROUND SERVICE ALERT INQUIRY I.D. NUMBER BY CALLING 811. TWO WORKING DAYS SHALL BE ALLOWED AFTER THE I.D. NUMBER IS OBTAINED AND BEFORE THE EXCAVATION WORK IS STARTED SO THAT UTILITY OWNERS CAN BE NOTIFIED. THE I.D. NUMBER TOGETHER WITH THE DATE ACQUIRED SHALL BE REPORTED TO THE BUREAU OF CONTRACT ADMINISTRATION WHEN CALLING FOR INSPECTION: METRO, (213) 580-5080. I.D. NUMBERS WILL NOT BE GIVEN MORE THAN 10 DAYS PRIOR TO STARTING EXCAVATION WORK.

30. EXISTING IMPROVEMENTS:

ALL EXISTING CURBS AND GUTTERS, SIDEWALKS, PAVINGS, DRIVEWAYS, LANDSCAPINGS, WALKS, SPRINKLER SYSTEMS, ETC. SHALL BE RESTORED TO THE ORIGINAL CONDITION, UNLESS OTHERWISE INDICATED, IN ACCORDANCE WITH APPLICABLE REQUIREMENTS OF THE SSPWC AND STANDARD PLANS.

ALL WORK PERFORMED OUTSIDE THE PUBLIC RIGHT-OF-WAY SHALL BE WITH THE APPROVAL OF THE ENGINEER AND AT THE ENGINEER'S DIRECTION. THE CONTRACTOR SHALL SUBMIT A DETAILED DESCRIPTION AND SCHEDULE OF WORK TO THE ENGINEER FOR APPROVAL.

THE CONTRACTOR IS REMINDED TO GIVE REASONABLE NOTICE TO OWNERS OR OCCUPANTS OF THE PROPOSED IMPROVEMENT FRONTING THEIR PROPERTY, PER SECTION 7-9 OF THE STANDARD SPECIFICATIONS. THE CONTRACTOR SHALL OBTAIN A CITY APPROVED "NOTICE OF PROPOSED SEWER WORK" FROM THE ENGINEER AND DISTRIUTE COPIES NO LATER THAN 10 CALENDAR DAYS PRIOR TO COMMENCEMENT OF CONSTRUCTION ACCORDANCE WITH SSPWC 7-10.1 AS MODIFIED BY STANDARD PLAN S-610. THE CONTRACTOR IS REMINDED THAT ALL NOTICES ARE NOT TO BE PLACED IN OR ATTACHED TO MAILBOXES.

WITHIN THIRTY (30) CALENDAR DAYS AFTER THE NOTICE TO PROCEED, THE CONTRACTOR SHALL OBTAIN AND PAY ALL COST INCURRED AND SUBMIT TO THE CITY'S BUREAU OF ENGINEERING COPIES OF ALL PERMITS REQUIRED FOR THE CONSTRUCTION AND INSTALLATION OF ALL WORK CALLED FOR ON THE PROJECT. THE CONTRACTOR SHALL BE RESPONSIBLE FOR ALL PERMITS AND INSPECTIONS REQUIRED BY THE DEPARTMENT OF BUILDING AND SAFETY AND DESCRIBED IN SECTION 7 OF THE STANDARD SPECIFICATIONS.

THE CONTRACTOR SHALL PROVIDE A CLASS "B" FIELD OFFICE IN ACCORDANCE WITH SUBSECTION 8-2.2 OF STANDARD SPECIFICATION FOR PUBLIC WORKS CONSTRUCTION WITH HEATING AND AIR CONDITIONING INCLUDED.

31. CONCRETE:

ALL CONCRETE CONSTRUCTION SHALL CONFORM TO THE REQUIREMENTS OF THE TECHNICAL SPECIFICATIONS, THE ACI BUILDING CODE REQUIREMENTS OR REINFORCED CONCRETE (ACI 318-89) AND THE CITY'S STANDARD PLANS. THE MORE STRINGENT CONDITION SHALL APPLY. THE CONTRACTOR SHALL INSTALL WATERPROOFING SYSTEMS TO ALL CONCRETE SURFACES IN ACCORDANCE WITH THE APPROPRIATE SECTIONS OF THE SPECIFICATIONS.

32. VENTILATION AND ODOR CONTROL:

THE CONTRACTOR SHALL PROVIDE ADEQUATE VENTILATION TO ASSURE A SAFE WORKING ENVIRONMENT.

THE CONTRACTOR SHALL PREVENT THE DISCHARGE OF NUISANCE ODOR IN SUCH QUANTITY AS WILL VIOLATE THE QUALITY OF THE AMBIENT ENVIRONMENT AS DEFINED BY, ENVIRONMENTAL CONTROL SECTION OF THE GENERAL REQUIREMENTS.

THE CONTRACTOR SHALL COMPLY WITH TECHNICAL SPECIFICATIONS, GENERAL REQUIREMENTS, ENVIRONMENTAL CONTROL, AND ALL OTHER APPLICABLE RULES AND REGULATIONS REGARDING VENTILATION AND ODOR CONTROL REQUIREMENTS.

33. LAYDOWN AND ACCESS:

LAYDOWN AND ACCESS AREAS AT THE VENICE PUMPING PLANT, NORTH OF THE MARINA ENTRANCE CHANNEL (LA COUNTY PARKING LOT NO. 13), AND SOUTH OF BALLONA CREEK (LA COUNTY 62nd AVE EAST PARKING LOT AND AN ADJACENT PRIVATE PARCEL) WILL BE PROVIDED BY THE CITY. THE REMAINING ACCESS POINTS/ PIT LOCATIONS REQUIRED TO COMPLETE THE PROJECT FALL IN PUBLIC RIGHT-OF-WAY. THE CONTRACTOR SHALL BE RESPONSIBLE TO SECURE AND PAY FOR ALL OTHER NEEDED LAYDOWN AREAS NEEDED FOR THE COMPLETION OF THIS PROJECT.

ALL REPAIRS TO CONSTRUCTION LAYDOWN, ACCESS, AND TEMPORARY IMPROVEMENTS SHALL BE INSPECTED AND APPROVED BY THE INSPECTOR AND/OR AN AUTHORIZED REPRESENTATIVE OF THE PROPERTY OWNER PER REQUEST.

THE CONTRACTOR SHALL REMOVE, REGRADE, AND WHEN NECESSARY, BACKFILL TO RESTORE THE CONSTRUCTION LAYDOWN ACCESS AND TEMPORARY IMPROVEMENTS TO ITS ORIGINAL/FORMER CONDITION AT THE COMPLETION OF THE WORK UNDER ONE LUMP SUM COST PER CONTRACT.

THE CONTRACTOR SHALL BACKFILL EXCAVATED AREAS WITH ENGINEERED FILL UP TO THE ORIGINAL GRADE, UNLESS OTHERWISE SPECIFIED OR INDICATED ON THESE PLANS. BACKFILL PIPE TRENCH ACCESSES ONLY AFTER PIPING HAVE BEEN INSPECTED.

34. WHEN EXISTING PLANTED AREAS ARE REGRADED, OR REMOVED AND REPLACED BECAUSE OF THE CONTRACTOR'S OPERATIONS, THE SOIL IN THESE AREAS SHALL BE ADEQUATELY PREPARED AND REPLANTED IN KIND. ALL MATERIALS SHALL CONFORM TO SSPWC 212. SOIL PREPARATION, PLANTING, AND PLANT MAINTENANCE DURING THE ESTABLISHED PERIOD SHALL CONFORM TO SSPWC 308. TOPSOIL SHALL BE CLASS C. IF THE EXISTING TOPSOIL AT THE PLANTED AREAS IS NOT REUSED, CLASS B TOPSOIL SHALL BE USED. THE SOIL FOR GROUND COVER AND LAWN AREAS SHALL BE CONDITIONED BY MIXING 30 LBS. PER 1,000 SQ. FT. OF COMMERCIAL FERTILIZER, HAVING AN 8-8-4 ANALYSIS, WITH THE TOP 6 INCHES OF SOIL. MULCH SHALL BE PROVIDED AND SHALL BE TYPE 5 FOR GROUND COVER AND TYPE 1 OR 2 FOR LAWN AREAS. FOR UNPLANTED PARKWAY AREAS, THE UPPER 12 INCHES OF ALL TOPSOIL SHALL BE CLASS C.

35. PUBLIC RELATIONS:

THE CONTRACTOR SHALL BE REQUIRED TO PARTICIPATE AT ALL PUBLIC RELATION AND COMMUNITY MEETINGS UNLESS EXCUSED BY THE ENGINEER. THE CONTRACTOR SHALL BE CONSCIENTIOUS WITH THE WORK AND SHALL PROVIDE MITIGATION TO ALL COMPLAINTS AND CONCERNS AS APPROVED BY THE ENGINEER.

THE CONTRACTOR IS ADVISED THAT THE COLLECTION AND REMOVAL OF TRASH/ RECYCLABLES/ YARD CLIPPINGS FOR RESIDENTS IN THE PROJECT AREA IS PERFORMED EVERY MONDAY FROM STREETS AND ALLEYWAYS WHERE PROPOSED SEWERS WILL BE CONSTRUCTED. THE CONTRACTOR SHALL COOPERATE WITH PARTIES COLLECTING AND REMOVING TRASH, ETC, SO THAT SCHEDULED SERVICES ARE MAINTAINED. (FIND OUT TRASH COLLECTION DATES FOR THE PROJECT AREA AND INSERT THIS NOTE IN THE PUBLIC RELATIONS PORTION OF THE NOTES)

THE CONTRACTOR SHALL PROTECT ALL EXISTING SEWERS AND STORM DRAINS PARALLEL AND/OR NEAR THE PROPOSED PITS AND TRENCH LOCATIONS.

36. NOTIFICATION:

A. THE CONTRACTOR SHALL NOTIFY THE OPERATION CONTROL DIVISION OF THE METROPOLITAN TRANSIT AUTHORITY (MTA), AT (213) 972-6111, TWO (2) WORKING DAYS IN ADVANCE OF ANY WORK THAT WILL AFFECT THE MTA BUS STOPS.

B. BEFORE COMMENCING ANY EXCAVATION, THE CONTRACTOR SHALL OBTAIN AN UNDERGROUND SERVICE ALERT (USA) INQUIRY I.D. NUMBER BY CALLING 811. TWO (2) WORKING DAYS SHALL BE ALLOWED AFTER THE I.D. NUMBER IS OBTAINED AND BEFORE THE EXCAVATION WORK IS STARTED SO THAT UTILITY OWNERS CAN BE NOTIFIED. THE I.D. NUMBER TOGETHER WITH THE DATE ACQUIRED SHALL BE REPORTED TO THE BUREAU OF CONTRACT ADMINISTRATION WHEN CALLING FOR INSPECTION. I.D. NUMBERS WILL NOT BE GIVEN MORE THAN TEN (10) DAYS PRIOR TO STARTING EXCAVATION WORK.

37. DWP NOTES:

A. WATER SYSTEM WORK WILL REQUIRE 4 DAYS OF COORDINATED WORK.

B. SUPPORT OF REPLACEMENT OF EXISTING WATER MAINS ACROSS TRENCHES SHALL BE IN ACCORDANCE WITH WATER SERVICES ORGANIZATION STANDARD DRAWING NOS. A-3615A, B-1453-1A, A-3716 AND A-9219. WHEN A WATER MAIN WILL BE EXPOSED GREATER THAN THE MAXIMUM ALLOWABLE SUPPORTABLE SPAN PER STANDARD DRAWING A3615-A, THE WATER MAIN MUST BE FIRST REPLACED OR RELOCATED BY DWP AND THEN SUPPORTED BY THE CONTRACTOR. UNLESS THE UTILITY IS LABELED AS "TO BE RELOCATED BY OTHERS", THE CONTRACTOR MUST MAKE FINANCIAL ARRANGEMENTS TO PAY FOR THE RELOCATION PRIOR TO DWP COMMENCING WORK. TO REQUEST FACILITIES TO BE MARKED IN THE FIELD, CALL UNDERGROUND SERVICE ALERT AT 1-800-422-4133, TWO WORKING DAYS BEFORE EXCAVATION.

C. TO COORDINATE FIELD WORK OR REQUEST PAVING CLEARANCE, PHONE HERB SCHWEIZER OF OUR CENTRAL DISTRICT FIELD OFFICE AT (213) 367-6794

38. PROPOSED MAXIMUM WORK AREAS AT ALL THE SHAFT LOCATIONS AND STAGING/SEQUENCING FOR EXECUTION OF THE WORK HAVE BEEN IDENTIFIED AND AS INDICATED IN THE TRAFFIC PLANS. ANY CHANGES OR MODIFICATIONS TO THESE PLANS AND THE PROPOSED SEQUENCING WILL BE AT CONTRACTOR'S COST AND WILL REQUIRE RE-SUBMITTAL TO THE CITY FOR APPROVAL.

DEPTH, CONFIGURATIONS AND DIMENSIONS OF THE SHAFTS AS SHOWN ARE APPORXIMATE AND SHALL BE DETERMINED BY THE CONTRACTOR. REFER TO TECHNICAL SPECIFICATIONS FOR SHORING DESIGN AND INSTALLATION REQUIREMENTS.

EXISTING UTILITIES SHOWN ON THESE DRAWINGS ARE APPROXIMATE IN SIZE, NUMBER, LOCATION, AND DEPTH. THE CONTRACTOR SHALL FIELD VERIFY ALL EXISTING UTILITIES PRIOR TO BEGINNING ANY WORK IN WORK AREAS AS INDICATED ON THE TRAFFIC PLANS CONTACT THE ENGINEER ANY UTILITIES THAT ARE FOUND AND NOT SHOWN ON THE PLANS.

DEVELOP TEMPORARY RELOCATION, BYPASS AND RESTORATION PLANS FOR EXISTING SEWERS AND STORM DRAINS THAT INTERFERE WITH THE SHAFT EXCAVATION. REROUTING OR REMOVAL OF ANY SEWER AND STORM DRAIN FACILITIES IS SUBJECT TO THE ENGINEER'S APPROVAL.

SAWCUT AND CAP ABANDONED UTILITIES AS NEEDED OR REQUIRED.

UTILITIES TO BE RELOCATED BY OTHERS ARE AS INDICATED. THE CONTRACTOR SHALL REQUEST A COPY OF THE RELOCATED UTILITY FIELD VERIFY THEIR NEW ALIGNMENT AFTER RELOCATION. ANY ADDITIONAL RELOCATION PROPOSED BY THE CONTRACTOR TO FACILITATE HIS MEANS AND METHOD OF CONSTRUCTION SHALL BE PAID FOR BY THE CONTRACTOR AT NO ADDITIONAL COST TO THE CITY.

OVERHEAD UTILITIES ARE NOT SHOWN ON THESE DRAWINGS EXCEPT WHERE INDICATED. VISIT THE WORK SITE TO DETERMINE WHETHER ANY OVERHEAD UTILITIES NOT SHOWN OR INDICATED NEED TO BE RELOCATED TO SUPPORT THE WORK. ANY SUCH UTILITY RELOCATIONS ARE SUBJECT TO THE ENGINEER'S APPROVAL.

UNLESS OTHERWISE INDICATED OR NOTED, UTILITIES AFFECTED BY OPEN CUT SECTION, INCLUDING EXISTING AND RELOCATED DWP LINES SHOULD BE POTHOLED, PROTECTED AND SUPPORTED IN PLACE DURING CONSTRUCTION. ANY FACILITIES DAMAGED OR REMOVED SHALL BE REPAIRED OR REPLACED BY THE CONTRACTOR AT NO ADDITIONAL COST TO THE CITY.

ALL STORM DRAIN RELOCATION WORK SHALL BE PERFORMED DURING DRY SEASON ONLY.

39. THE CONTRACTOR SHALL NOTIFY THE COUNTY OF LOS ANGELES FIRE DEPARTMENT, STATION 110, AT LEAST 3 DAYS IN ADVANCE OF ANY STREET CLOSURES OR WATER SERVICE INTERRUPTION.

(CONTINUED ON SHEET R-5)


CITY OF LOS ANGELES • DEPARTMENT OF PUBLIC WORKS • BUREAU OF ENGINEERING

LA DPW ENGINEERING TRANSFORMING LOS ANGELES

| NO. | REVISIONS | DATE | BY: |
|---|---|---|---|

CIP NO. AS-BID

NOT FOR CONSTRUCTION

CITY ENGINEER: GARY LEE MOORE, P.E.

DESIGN GROUP

| | | | DATE |
|---|---|---|---|
| ENGINEER: | SEAN ZAHEDI/DARSHNA PATEL | LIC. NO. C-75974 | 07-14 |
| DESIGNED BY: | DARSHNA PATEL, CAN CHOW | | 07-14 |
| DRAWN BY: | CAN CHOW, HIEP LAM | | 07-14 |
| CHECKED BY: | ABID CHOWDHRY, P.E. | | 07-14 |
| APPROVED BY: | BRAD JENSON, P.E. | | 07-14 |

VERTICAL CONTROL: NGVD29, 1985 ADJ
HORIZONTAL CONTROL: NAD83, EPOCH 1991.5

SHEET TITLE: NOTICE TO CONTRACTORS
PROJECT: VENICE DUAL FORCE MAIN
ADDRESS: MARINA DEL REY, CALIFORNIA

WORK ORDER NO. SZC11631
DRAWING NO. R-4
SHEET 4


REVISION DATES (DESIGN STAGE ONLY)

FILE: Q:\CAD DATA\SZCxxxxx\szc11631\civil\asbid\vdfmDr4.dgn
DATE: 13-Aug-14 13:03

# NOTICE TO CONTRACTORS (CONTINUED)

40. TRAFFIC CONTROL NOTES:

TRAFFIC LANE REQUIREMENTS:

VISTA DEL MAR, CULVER BOULEVARD: MAINTAIN ONE LANE OF TRAFFIC IN EACH DIRECTION AT ALL TIMES

WORK SHALL BE PERFORMED IN ACCORDANCE WITH THE LATEST EDITION OF CITY OF LOS ANGELES WORK AREA TRAFFIC CONTROL HANDBOOK (WATCH) OR LADOT STANDARDIZED PLANS.

ALL EXISTING SIGNING NOT IN CONFORMANCE WITH THE DETOUR PLANS SHALL BE COVERED FOR THE DURATION OF THE DETOUR. ALL TEMPORARY FACILITIES CONSTRUCTED FOR THE PURPOSES OF THIS DETOUR SHALL BE REMOVED AT THE COMPLETION OF THE CONSTRUCTION PERIOD. THE CONTRACTOR SHALL UPDATE ALL CONSTRUCTION SIGNS TO INDICATE THE PROJECT COMPLETION DATE.

ALL EXISTING FACILITIES, INCLUDING SIGNING, STRIPING, SIGNS, MARKING, AND MARKERS SHALL BE RESTORED TO THE ORIGINAL CONDITION AND/OR LOCATION AT THE END OF THE CONSTRUCTION PERIOD.

ANY VEHICULAR SIGNS THAT ARE OBSCURED, OR HAVE IMPAIRED OR REDUCED VISIBILITY SHALL BE RELOCATED BY THE CONTRACTOR UPON IDENTIFICATION AND NOTIFICATION BY LADOT.

THE CONTRACTOR SHALL BE RESPONSIBLE AT ALL TIMES FOR THE MAINTENANCE OF THE DEVICES REQUIRED TO PROTECT THE PUBLIC SAFETY AND WELFARE.

THE CITY OF LOS ANGELES DEPARTMENT OF TRANSPORTATION RESERVES THE RIGHT TO OBSERVE THESE TRAFFIC CONTROL PLANS IN USE AND TO MAKE ANY NECESSARY CHANGES AS FIELD CONDITION WARRANT. ANY CHANGES SHALL SUPERSEDE THESE PLANS AND WILL BE DONE SOLELY AT THE CONTRACTOR?S EXPENSE.

THE NAME AND TELEPHONE NUMBER(S) (24-HOUR AVAILABILITY) OF THE CONTRACTOR'S SAFETY COORDINATOR/TRAFFIC CONTROL DEVICE MAINTENANCE MONITOR SHALL BE PROVIDED TO THE LADOT WESTERN DISTRICT ENGINEER AT (310) 575-8138. ANY CHANGE IN THE CONTRACTOR'S ASSIGNED PERSONNEL AND/OR THEIR TELEPHONE NUMBER(S) SHALL BE REPORTED IMMEDIATELY TO THE LADOT WESTERN DISTRICT ENGINEER.

TRAFFIC CONTROL DEVICES SHALL CONFORM TO THOSE IN THE LATEST EDITION OF CITY OF LOS ANGELES WATCH TRAFFIC MANUAL, AS PUBLISHED BY BUILDING NEWS, INC., AND STANDARD PLAN S-791-1.

SIGNS SHALL BE PLACED A MINIMUM OF SEVEN (7) DAYS PRIOR TO ANY EXCAVATION, WORK OR LANE BLOCKAGES, WHICHEVER OCCURS FIRST AND SHALL BE IN ACCORDANCE WITH THE CURRENT MANUAL OF TRAFFIC CONTROLS FOR CONSTRUCTION AND MAINTENANCE WORK ZONES; OR THE LATEST ADOPTED EDITION OF *WATCH*.

REMOVAL AND/OR RESTORATION OF STRIPING AND PAVEMENT MARKINGS:

REMOVAL OF STRIPING AND PAVEMENT MARKINGS MAY BE ACCOMPLISHED BY SANDBLASTING, TURBO-BLASTING, OR LADOT APPROVED ROTARY GRINDING, BUT SHALL NOT BE ACCOMPLISHED BY COVERING WITH BLACK PAINT. THE CONTRACTOR SHALL ARRANGE FOR INSPECTION AND APPROVAL OF ALL MARKOUT LINES BY LADOT PRIOR TO THE INSTALLATION OF DETOUR STRIPING AND RESTORATION STRIPING. ALL STRIPING AND PAVEMENT MARKING RESTORATION SHALL BE INSTALLED WITH THERMOPLASTIC MATERIALS PER LADOT SPECIFICATIONS.

41. THE CONTRACTOR SHALL NOTIFY THE LADOT, WESTERN DISTRICT AT TELEPHONE (310) 575-8138, AT LEAST TEN (10) WORKING DAYS PRIOR TO COMPLETION OF THE PROJECT FOR THE REINSTALLATION OF ALL NECESSARY SINGS, CURB MARKINGS, PAVEMENT MARKINGS, AND FINAL STRIPING.

42. TRAFFIC SIGNAL NOTES:

THE FOLLOWING CONDITIONS SHALL APPLY AT LOCATIONS WHERE CONSTRUCTION INTERFERES WITH EXISTING CITY OF LOS ANGELES DEPARTMENT OF TRANSPORTATION (LADOT) TRAFFIC SIGNAL PULLBOXES, CONDUITS, DETECTOR LOOPS, OR OTHER EQUIPMENT.

A.) MATERIALS AND INSTALLATION SHALL, EXCEPT AS OTHERWISE STATED OR PROVIDED HEREWITH, CONFORM TO THE LATEST EDITION AND SUPPLEMENTS OF THE STANDARD SPECIFICATIONS FOR PUBLIC WORKS CONSTRUCTION ADOPTED BY THE BOARD OF PUBLIC WORKS OF THE CITY OF LOS ANGELES AS MODIFIED BY THE CORRESPONDING ISSUE OF THE STANDARD PLAN S-610, AND THE LATEST EDITION OF THE LADOT SPECIAL PROVISIONS AND STANDARD DRAWINGS FOR THE INSTALLATION AND MODIFICATION OF TRAFFIC SIGNALS.

B.) THE LADOT TRAFFIC SIGNAL INSPECTOR, TELEPHONE (213) 485-2217 (FOR LOCATIONS IN SAN FERNANDO VALLEY (818) 756-7852 OR (818) 756-8414), SHALL BE NOTIFIED THREE (3) WORKING DAYS PRIOR TO BEGINNING CONSTRUCTION.

C.) TRAFFIC SIGNAL CONTROL SHALL BE MAINTAINED BETWEEN THE HOURS OF 6:00-9:00 A.M. AND 4:00-7:00 P.M. ON WEEKDAYS. FLASHING, SHUTDOWN, OR TURN ON OF SIGNALS SHALL BE ACCOMPLISHED ONLY BY AN LADOT TRAFFIC SIGNAL ELECTRICIAN. ARRANGEMENT FOR ALL SHUTDOWNS SHALL BE MADE 24 HOURS PRIOR TO START OF ANY CONSTRUCTION BY CONTACTING THE LADOT INSPECTOR AT (213) 485-9161 BETWEEN 6:30-9:00 A.M.; IF NO ANSWER CALL (213) 485-1071.

D.) THE CONTRACTOR SHALL MAINTAIN ALL EXISTING LADOT TRAFFIC SIGNS. CONTACT THE LADOT SIGN FOREMAN, AT TELEPHONE (213) 485-6765 OR (213) 485-2217, (FOR LOCATIONS IN SAN FERNANDO VALLEY (818) 756-7851 OR (818) 756-8414), THREE (3) WORKING DAYS PRIOR TO CONSTRUCTION FOR REMOVAL OR REINSTALLATION OF SIGNS. ANY SIGNS LOST OR DAMAGED BY THE CONTRACTOR SHALL BE REPLACED AT THE CONTRACTOR'S EXPENSE.

E.) IN THE EVENT THAT CONDUIT OR TRAFFIC SIGNAL PULLBOXES INTERFERE WITH PROPOSED CONSTRUCTION, THE CONTRACTOR WILL BE AUTHORIZED BY THE PROJECT ENGINEER TO RELOCATE OR REPLACE THE CONDUIT AND/OR THE PULLBOXES. FOR CITY CONTRACTS, THE CONTRACTOR WILL BE PAID IN ACCORDANCE WITH SECTION 3-3 OF THE STANDARD SPECIFICATIONS FOR PUBLIC WORKS CONSTRUCTION. FOR ALL OTHER WORK PERFORMED UNDER PERMITS, ANY AMOUNT PAID FOR ADDITIONAL WORK SHALL BE THE AGREED PRICE BETWEEN THE PERMITTEE AND THE CONTRACTOR. ALL WORK MUST BE PERFORMED BY A LICENSED CONTRACTOR EXPERIENCED IN TRAFFIC SIGNAL CONSTRUCTION.

F.) IN THE EVENT OF DAMAGE TO EXISTING TRAFFIC SIGNAL EQUIPMENT, CONDUIT, OR DETECTOR LOOPS, THE CONTRACTOR SHALL IMMEDIATELY NOTIFY THE LADOT TRAFFIC SIGNAL SUPERINTENDENT, TELEPHONE (213) 847-2991, AND SHALL BE RESPONSIBLE FOR REPAIR OR REPLACEMENT AT NO COST TO THE CITY. REPAIRED OR REPLACED EQUIPMENT/CONDUIT SHALL BE INSPECTED BY THE TRAFFIC SIGNAL INSPECTOR BEFORE SIGNAL CIRCUITS ARE ENERGIZED.

G.) IF THE METHOD OF CONSTRUCTION INTERFERES WITH ADEQUATE VISIBILITY OF THE VEHICLE AND/OR THE PEDESTRIAN SIGNAL HEADS AT THEIR EXISTING LOCATIONS, THE CONTRACTOR SHALL PREPARE TEMPORARY AND RESTORATION SIGNAL PLANS IN SUPPORT OF THE TRAFFIC CONTROL PLAN. NECESSARY SIGNAL PLANS SHALL BE PREPARED BY A REGISTERED CIVIL/TRAFFIC ENGINEER AND SUBMITTED TO LADOT FOR APPROVAL PRIOR TO START OF CONSTRUCTION. THE CONTRACTOR SHALL BE RESPONSIBLE FOR REMOVAL AND INSTALLATION OF TEMPORARY, AS WELL AS, PERMANENT TRAFFIC SIGNAL EQUIPMENT, AND THE ENTIRE COST THEREOF SHALL BE BORNE BY THE CONTRACTOR.

UNLESS OTHERWISE REQUIRED AS A CONDITION OF A DISCRETIONARY ACTION, TRAFFIC SIGNAL WORK BY THE LADOT IS NOT ANTICIPATED IN CONNECTION WITH THIS PROJECT. STANDARD SPECIFICATIONS FOR PUBLIC WORKS CONSTRUCTION (LATEST EDITION AND SUPPLEMENTS) AND THE CORRESPONDING ISSUE OF STANDARD PLAN S-610 WILL BE SATISFACTORY FOR THE REMAINDER OF THE TRAFFIC REQUIREMENTS.

FOR QUESTIONS REGARDING TRAFFIC LANE REQUIREMENTS, PLEASE CALL MR. AAGE LEE OF THE WESTERN DISTRICT OFFICE, LADOT, (310) 575-8138. FOR QUESTIONS REGARDING TRAFFIC SIGNAL NOTES, PLEASE CONTACT MR. AZIZ MASHIAN, SIGNAL DESIGN SECTION, LADOT, (213) 580-5305.

43. STREET LIGHTING NOTES

(P) = INDICATES PROTECT EXISTING STREET LIGHTING FACILITIES.
THE CONTRACTOR SHALL PROTECT AND MAINTAIN ALL STREET LIGHTING FACILITIES EXISTING WITHIN THE WORK AREA. SHOULD ANY DAMAGE TO THE EXISTING STREET LIGHTING SYSTEM OCCUR, THE CONTRACTOR SHALL IMMEDIATELY NOTIFY THE BUREAU OF STREET LIGHTING, FIELD OPERATIONS DIVISION, BY TELEPHONING (323) 913-4743; OR, AFTER 4:30 P.M. (3:30 P.M. ON FRIDAYS), CONTACT THE ELECTRIC TROUBLE BOARD OF DWP BY TELEPHONING (800) 821-5279 WITHIN THE (818) AREA CODE OF SAN FERNANDO VALLEY, OR (800) 821-5278 WITHIN THE 213 AND 310 AREA CODES OF LOS ANGELES. THE CONTRACTOR SHALL ARRANGE FOR IMMEDIATE REPAIR AND RESTORATION TO SERVICE OF THE DAMAGED LIGHTING SYSTEM AT NO COST TO THE CITY. A LICENSED ELECTRICAL CONTRACTOR IS REQUIRED TO MAKE ALL REPAIRS. ALL STREET LIGHTING WORK SHALL BE MADE IN ACCORDANCE WITH THE LATEST EDITION AND SUPPLEMENTS OF THE " STANDARD SPECIFICATIONS FOR PUBLIC WORKS CONSTRUCTION."

ADOPTED BY THE BOARD OF PUBLIC WORKS OF THE CITY OF LOS ANGELES AS MODIFIED BY THE CORRESPONDING ISSUE OF THE BROWN BOOK AND THE BUREAU OF STREET LIGHTING "SPECIAL SPECIFICATIONS", INCLUDING REVISIONS THROUGH OCTOBER 21, 1993.

(S) = INDICATES "HIGH" VOLTAGE SERIES CIRCUIT.
UNAUTHORIZED WORK OR DAMAGE TO THE 'HIGH VOLTAGE' SERIES CIRCUIT COULD RESULT IN SERIOUS INJURY. THE CONTRACTOR SHALL ARRANGE FOR IMMEDIATE REPAIR TO THE DAMAGED STREET LIGHTING CONDUIT. PULLBOXES (OTHER THAN THOSE SPECIFIED ON THE PLAN) MAY BE INSTALLED ONLY UPON APPROVAL OF BUREAU OF STREET LIGHTING ENGINEER. WARNING: SAFETY CLEARANCE SHALL BE OBTAINED DAILY FROM AFFECTED UTILITY COMPANY BEFORE DOING ANY WORK ON AN EXISTING CIRCUIT. SEE SECTIONS 106 AND 110 OF THE "SPECIAL SPECIFICATIONS".

SERIES CIRCUIT NOTES:

A.) WARNING: CLEARANCE SHALL BE OBTAINED DAILY FROM THE SERVING COMPANY, AND "MEN AT WORK" SIGNS SHALL BE POSTED AT THE SEVICE POINT BEFORE ANY WORK IS DONE OR ANY CONNECTIONS MADE ON AN EXISTING CIRCUIT. SEE SECTIONS 106 AND 110 OF BUREAU OF STREET LIGHTING SPECIAL SPECIFICATIONS.
B.) SERIES CIRCUIT WIRE SHALL BE NO. 8 AWG SOLID COPPER CONDUCTOR, INSULATED WITH 0.110" APPROVED POLYETHYLENE COMPOUND RATED FOR 5,000 VOLT OPERATION.
C.) TWO OR MORE TURNS OF SELF-ADHESIVE COLORED TAPE WITH A MINMUM WIDTH OF ½INCH SHALL BE APPLIED TO EACH CABLE IN ALL SERIES CIRCUITS WHERE WORK IS BEING DONE AND WHERE TWO OR MORE CIRCUITS EXIST IN A COMMON PULLBOX OR POST BASE. THE TAPE SHALL BE APPLIED ON THE CABLE BETWEEN THE SPLICES AND THE CONDUIT, USING ONE COLOR FOR EACH CIRCUIT. THE COLORS WHITE, GRAY, GREEN, AND ORANGE SHALL NOT BE USED.
D.) THE CONTRACTOR SHALL GIVE TWO WORKING DAYS NOTICE TO THE BUREAU OF STREET LIGHTING FIELD OPERATIONS DIVISION PRIOR TO WORKING ON ANY SERIES CIRCUITS. CONTACT ART NEWBORN AT (323) 913-4741.

MULTIPLE CIRCUIT NOTES

A.) WARNING: SAFETY CLEARANCE SHALL BE OBTAINED DAILY FROM THE SERVING COMPANY BEFORE DOING ANY WORK OR MAKING ANY CONNECTIONS ON AN EXISTING CIRCUIT. SEE SECTIONS 106 AND 110 OF BUREAU OF STREET LIGHTING SPECIAL SPECIFICATIONS.
B.) MULTIPLE CIRCUIT WIRE SHALL BE NO. 8 AWG STRANDED COPPER CONDUCTOR, TYPE THWM/THHN INSULATION, UL APPROVED FOR 600 VOLT OPERATION UNLESS OTHERWISE SPECIFIED HEREON.
C.) THREE WIRES (COLOR CODE: 1-RED, 1-BLACK, 1-WHITE) SHALL BE INSTALLED IN ALL MULTIPLE CIRCUIT CONDUIT UNLESS OTHERWISE PROVIDED FOR HEREON.
D.) EVEN NUMBERED ELECTROLIERS SHALL BE CONNECTED TO RED AND WHITE WIRES AND ODD NUMBERED ELECTROLIERS SHALL BE CONNECTED TO BLACK AND WHITE WIRES.
E.) ELECTROLIERS SHALL BE WIRED PER TYPICAL MULTIPLE CIRCUIT ELECTROLIER WIRING DETAIL, BUREAU OF STREET LIGHTING STANDARD DRAWING NO. L-301-1, UNLESS OTHERWISE SPECIFIED.
F.) MULTIPLE CIRCUITS IN CONDUITS CONTAINING MORE THAN THREE CONDUCTORS SHALL BE APPROPRIATELY IDENTIFIED BY LABELING CONDUCTORS "A", "B", ETC. WITH THE APPROVED SELF-LAMINATING LETTER TAPE WRAPPED AT LEAST TWICE AROUND THE CONDUCTOR IN EACH PULLBOX. (W.H. BRADY, SPECIAL SELF-LAMINATING WIRE MARKERS OR EQUIVALENT).

44. ABANDONMENT OF OIL WELLS:

SHOULD CONTRACTOR ENCOUNTER AN OIL WELL DURING CONSTRUTION, THE FOLLOWING INSTRUCTION TO BE FOLLOWED.

IF A VERTICAL METAL PIPE GREATER THAN 6 INCHES DIAMETER IS ENCOUNTERED, DO NOT DISTURB IT FURTHER AND NOTIFY THE ENGINEER AND CONTRACT ADMINISTRATION INSPECTOR. STOP THE EXCAVATION WORK IN THE IMMEDIATE AREA. CHECK THE WELL CASING FOR FLUID (DRILLING MUD, WATER AND/OR OIL) AND GAS (HYDROGEN SULFIDE, METHANE OR CARBON MONOXIDE) AND INITIATE APPROPRIATE HEALTH AND SAFETY MEASURES (WHICH SHOULD BE SPECIFIED IN ADVANCE IN THE HEALTH & SAFETY PLAN THAT THE CONTRACTOR MUST HAVE ON HAND AT ALL TIMES, AS BELOW). OIL WELLS ABANDONED BETWEEN ABOUT 1942-51 COMMONLY DID NOT HAVE A DEEP CEMENT PLUG AS REQUIRED BY LATER ABANDONMENTS, SO FLUIDS OR GAS UNDER PRESSURE COULD ASCEND THE WELL.

NOTIFY THE HEALTH & SAFETY MANAGER AND CONTRACT ADMINISTRATION INSPECTOR. NOTIFY THE STATE DIVISION OF OIL, GAS & GEOTHERMAL RESOURCES @ (714) 816-6847. THEY WILL SEND AN ENGINEER TO INSPECT THE SITE AND HELP IDENTIFY THE WELL NAME AND ITS HISTORY (DEPTHS TO PLUGS, ETC.) THE ENGINEER WILL PROBABLY REQUIRE A GAS TEST OF THE WELL, COMMONLY BY PAINING THE JOINTS WITH A SOAP SOLUTION TO OBSERVE ANY BUBBLES AND USING AN LEL METER. **THE DOGGR ENGINEER WILL DIRECT ON HOW TO PROPERLY ABANDON THE WELL** IF IT IS LEAKING OIL OR GAS. THEY MAINTAIN A LIST OF QUALIFIED WELL RE-ABANDONMENT CONTRACTORS .A SURVEY OF THE WELL LOCATION WILL BE REQUIRED.

CITY OF LOS ANGELES • DEPARTMENT OF PUBLIC WORKS • BUREAU OF ENGINEERING

LA DPW ENGINEERING TRANSFORMING LOS ANGELES

| NO. | REVISIONS | DATE | BY: |
|---|---|---|---|

CIP NO. AS-BID

NOT FOR CONSTRUCTION

| | | | |
|---|---|---|---|
| CITY ENGINEER | GARY LEE MOORE, P.E. | | DATE |
| DESIGN GROUP | | | |
| ENGINEER: | SEAN ZAHEDI/DARSHNA PATEL | LIC. NO. C-75974 | 07-14 |
| DESIGNED BY: | DARSHNA PATEL, CAN CHOW | | 07-14 |
| DRAWN BY: | CAN CHOW, HIEP LAM | | 07-14 |
| CHECKED BY: | ABID CHOWDHRY, P.E. | | 07-14 |
| APPROVED BY: | BRAD JENSON, P.E. | | 07-14 |

VERTICAL CONTROL: NGVD29, 1985 ADJ
HORIZONTAL CONTROL: NAD83, EPOCH 1991.5

SHEET TITLE: NOTICE TO CONTRACTORS
PROJECT: VENICE DUAL FORCE MAIN
ADDRESS: MARINA DEL REY, CALIFORNIA

WORK ORDER NO. SZC11631
DRAWING NO. R-5
SHEET 5

REVISION DATES (DESIGN STAGE ONLY)

REVISION DATES (DESIGN STAGE ONLY)

FILE: Q:\CAD DATA\SZCxxxxx\szc1631\civil\abid\vdfmb6.dgn
DATE: 09-Jul-14 09:06

GAUGING DATA, MH#562-08-064

SPECIAL GAUGING 96212 (#2)

Site Id: 56208064 File name: 06041230.G3Y

Graph span: 1 week

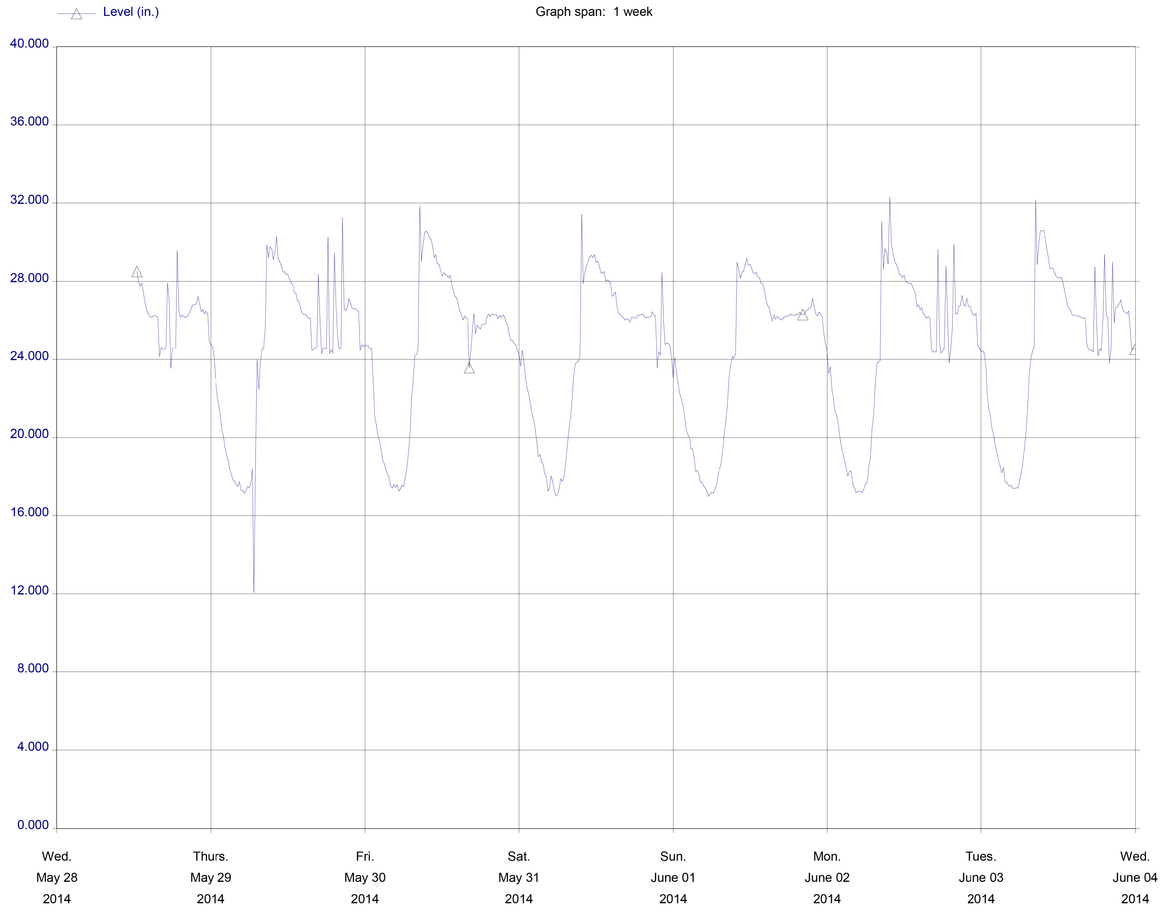


MH 562-08-064 (ODALOG)

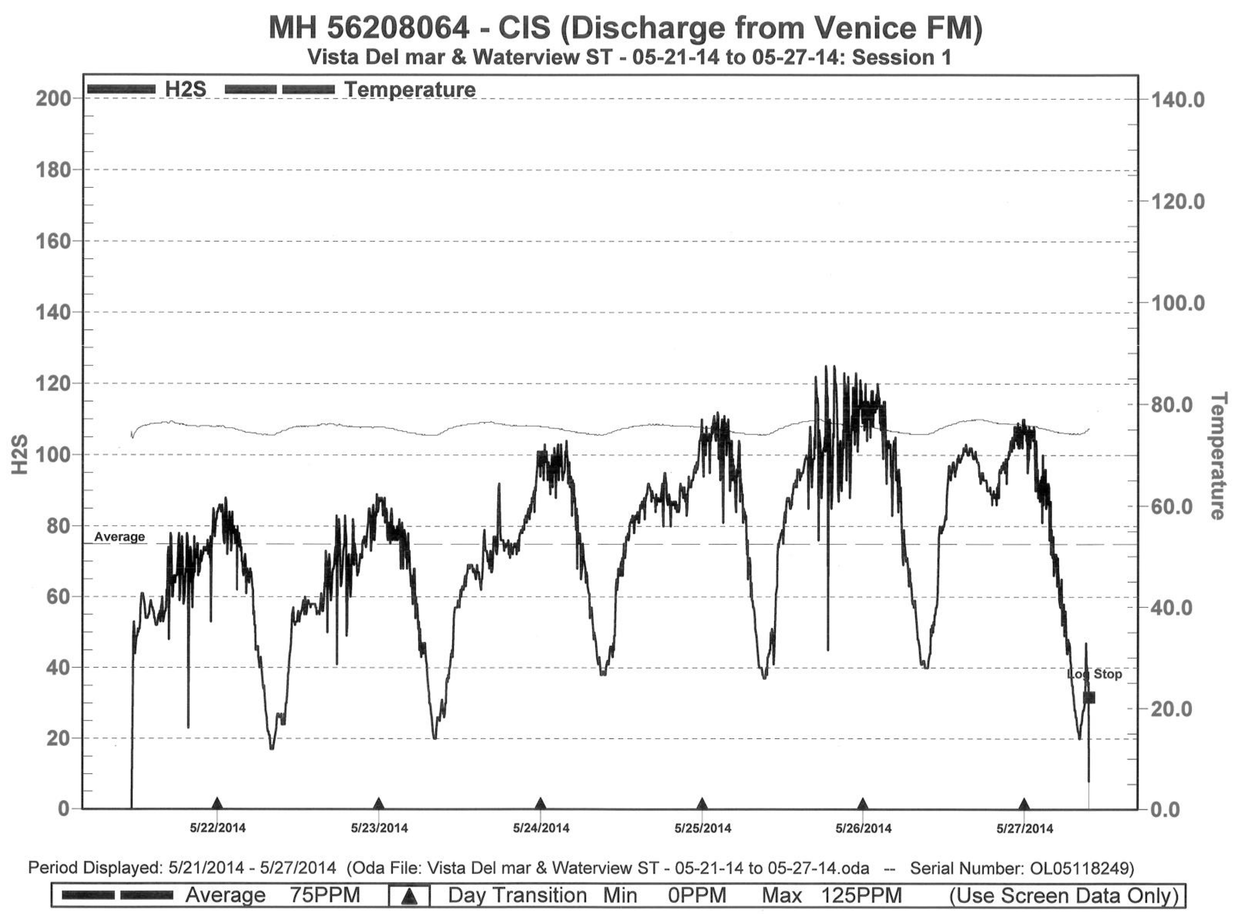


NOTE:

INFORMATION INCLUDED IS FOR CONTRACTOR'S BIDDING PURPOSE ONLY. THE CONTRACTOR SHALL CONFIRM THE INFORMATION WITH ENGINEER PRIOR TO THE CONSTRUCTION OF THE BYPASS OF EXISTING CIS FLOW AT WATERVIEW STRUCTURE.

NOTE: REFER TO NOTE 26 SEWAGE SERVICE REQUIREMENTS ON DRAWING R-3.

CITY OF LOS ANGELES • DEPARTMENT OF PUBLIC WORKS • BUREAU OF ENGINEERING

SHEET 6 R-6 DRAWING NO. WORK ORDER NO. SZC1631

VERTICAL CONTROL: NGVD29, 1985 ADJ
HORIZONTAL CONTROL: NAD83, EPOCH 1991.5

SHEET TITLE: CIS HYDROGRAPH & ODALOG
PROJECT: VENICE DUAL FORCE MAIN
ADDRESS: MARINA DEL REY, CALIFORNIA

GARY LEE MOORE, P.E. CITY ENGINEER

| DESIGN GROUP | | DATE |
|---|---|---|
| ENGINEER: | SEAN ZAHEDI/DARSHNA PATEL LIC. NO. C-75974 | 07-14 |
| DESIGNED BY: | DARSHNA PATEL, CAN CHOW | 07-14 |
| DRAWN BY: | CAN CHOW, HIEP LAM | 07-14 |
| CHECKED BY: | ABID CHOWDHRY, P.E. | 07-14 |
| APPROVED BY: | BRAD JENSON, P.E. | 07-14 |

| NO. | REVISIONS | DATE | BY: |
|---|---|---|---|

CIP NO. AS-BID

LA DPW ENGINEERING TRANSFORMING LOS ANGELES

NOT FOR CONSTRUCTION

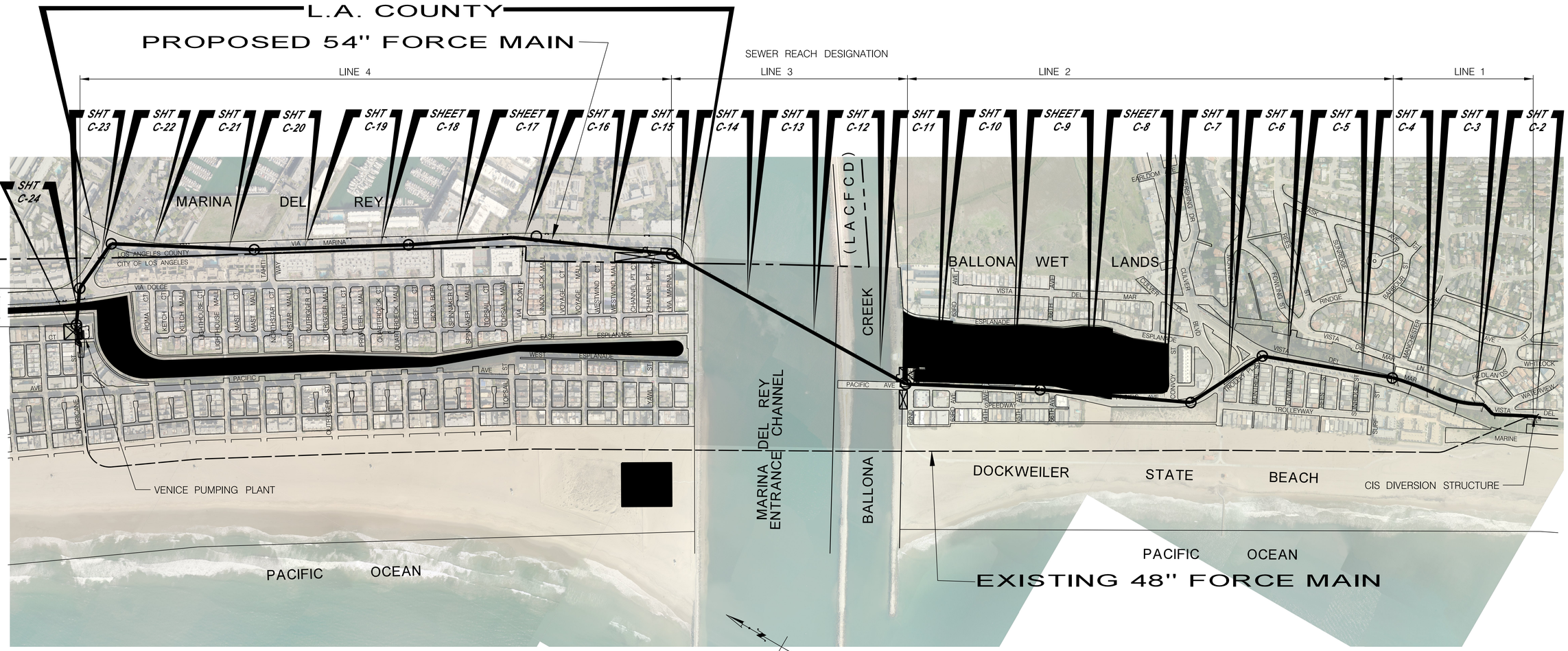


## KEY MAP
NOT TO SCALE

LEGEND

LEAST TERN FORAGING & NESTING ENVIRONMENTAL MONITORING REQUIRED DURING APRIL 1 THROUGH AUGUST 31, SEE GENERAL REQUIREMENT 01562

SHAFT LOCATION

LAYDOWN AREA

CITY OF LOS ANGELES • DEPARTMENT OF PUBLIC WORKS • BUREAU OF ENGINEERING

LA DPW ENGINEERING TRANSFORMING LOS ANGELES

| NO. | REVISIONS | DATE | BY: |
|---|---|---|---|

INDEX NO.

CIP NO. AS-BID

GARY LEE MOORE, P.E.

| | CITY ENGINEER | DATE |
|---|---|---|
| | DESIGN GROUP | |
| ENGINEER: | SEAN ZAHEDI/DARSHNA PATEL LIC. NO. C-75974 | 07-14 |
| DESIGNED BY: | DARSHNA PATEL, CAN CHOW | 07-14 |
| DRAWN BY: | CAN CHOW, HIEP LAM | 07-14 |
| CHECKED BY: | ABID CHOWDHRY, P.E. | 07-14 |
| APPROVED BY: | BRAD JENSON, P.E. | 07-14 |

VERTICAL CONTROL: NGVD29, 1985 ADJ
HORIZONTAL CONTROL: NAD83, EPOCH 1991.5

SHEET TITLE: KEY MAP

PROJECT: VENICE DUAL FORCE MAIN

ADDRESS: MARINA DEL REY, CALIFORNIA

WORK ORDER NO. SZC11631

DRAWING NO. C-1

SHEET 7

NOT FOR CONSTRUCTION

REVISION DATES (DESIGN STAGE ONLY)

FILE: Q:\CAD DATA\SZCxxxxx\szc11631\civil\asbid\vdfmDc01.dgn
DATE: 09-Jul-14 09:18/13/2014 1:52:10 PM

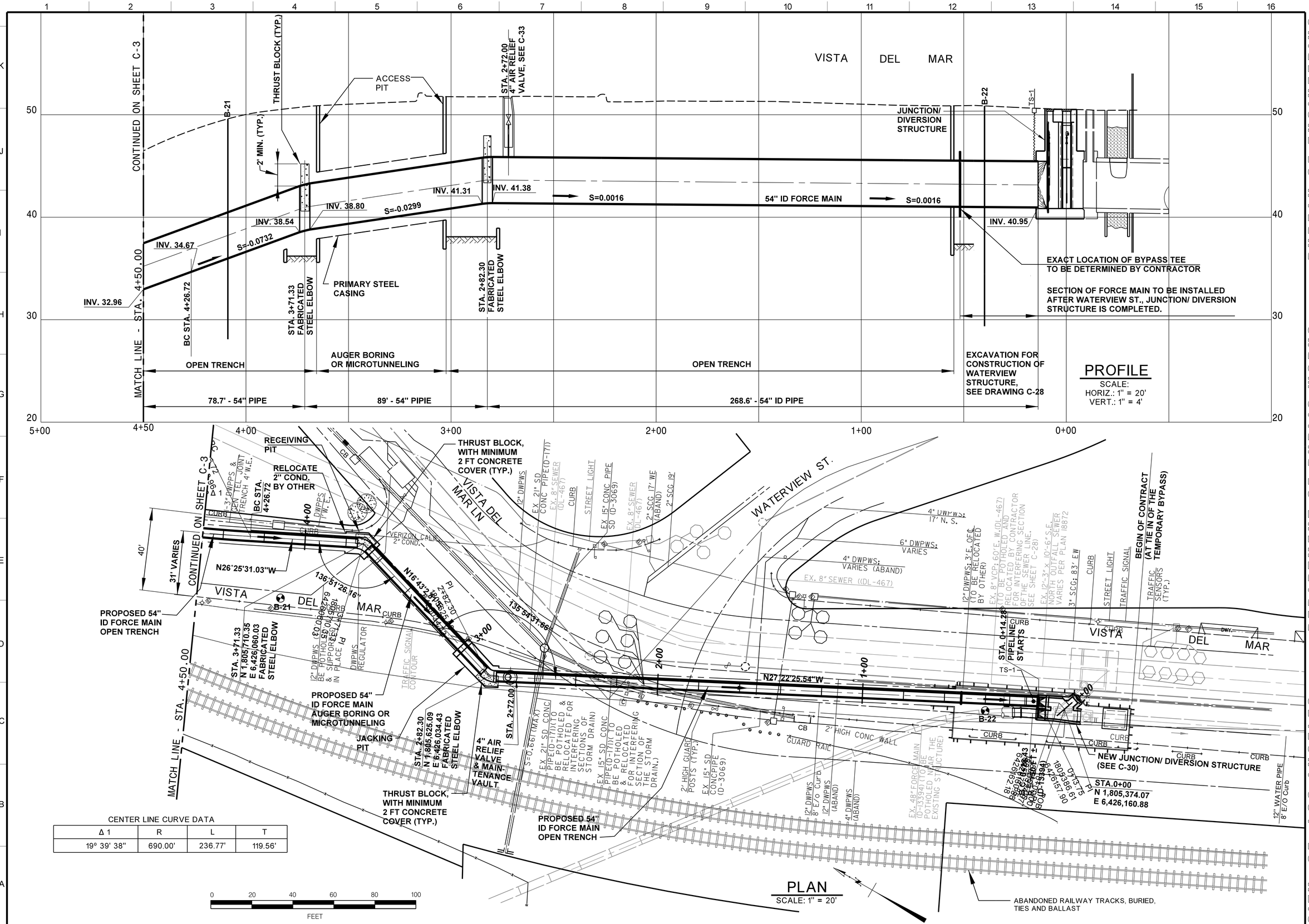


CENTER LINE CURVE DATA

| Δ 1 | R | L | T |
|---|---|---|---|
| 19° 39' 38" | 690.00' | 236.77' | 119.56' |

REVISION DATES (DESIGN STAGE ONLY)

CITY OF LOS ANGELES • DEPARTMENT OF PUBLIC WORKS • BUREAU OF ENGINEERING

LA DPW ENGINEERING TRANSFORMING LOS ANGELES

| NO. | REVISIONS | DATE | BY: |
|---|---|---|---|

CIP NO. AS-BID

INDEX NO.

| | | DATE |
|---|---|---|
| CITY ENGINEER | | |
| DESIGN GROUP | | |
| ENGINEER: | SEAN ZAHEDI/DARSHNA PATEL LIC. NO. C-75974 | 07-14 |
| DESIGNED BY: | DARSHNA PATEL, CAN CHOW | 07-14 |
| DRAWN BY: | CAN CHOW, HIEP LAM | 07-14 |
| CHECKED BY: | ABID CHOWDHRY, P.E. | 07-14 |
| APPROVED BY: | BRAD JENSON, P.E. | 07-14 |

GARY LEE MOORE, P.E.

VERTICAL CONTROL: NGVD29, 1985 ADJ
HORIZONTAL CONTROL: NAD83, EPOCH 1991.5

SHEET TITLE: PLAN & PROFILE (STA. 0+00 TO STA. 4+50)

PROJECT: VENICE DUAL FORCE MAIN

ADDRESS: MARINA DEL REY, CALIFORNIA

WORK ORDER NO. SZC11631

DRAWING NO. C-2

SHEET 8

NOT FOR CONSTRUCTION

FILE: Q:\CAD DATA\SZCxxxxx\szc11631\civil\asbid\vdfmDc02.dgn
DATE: 09-Jul-14 09:16/8/13/2014 2:39:04 PM

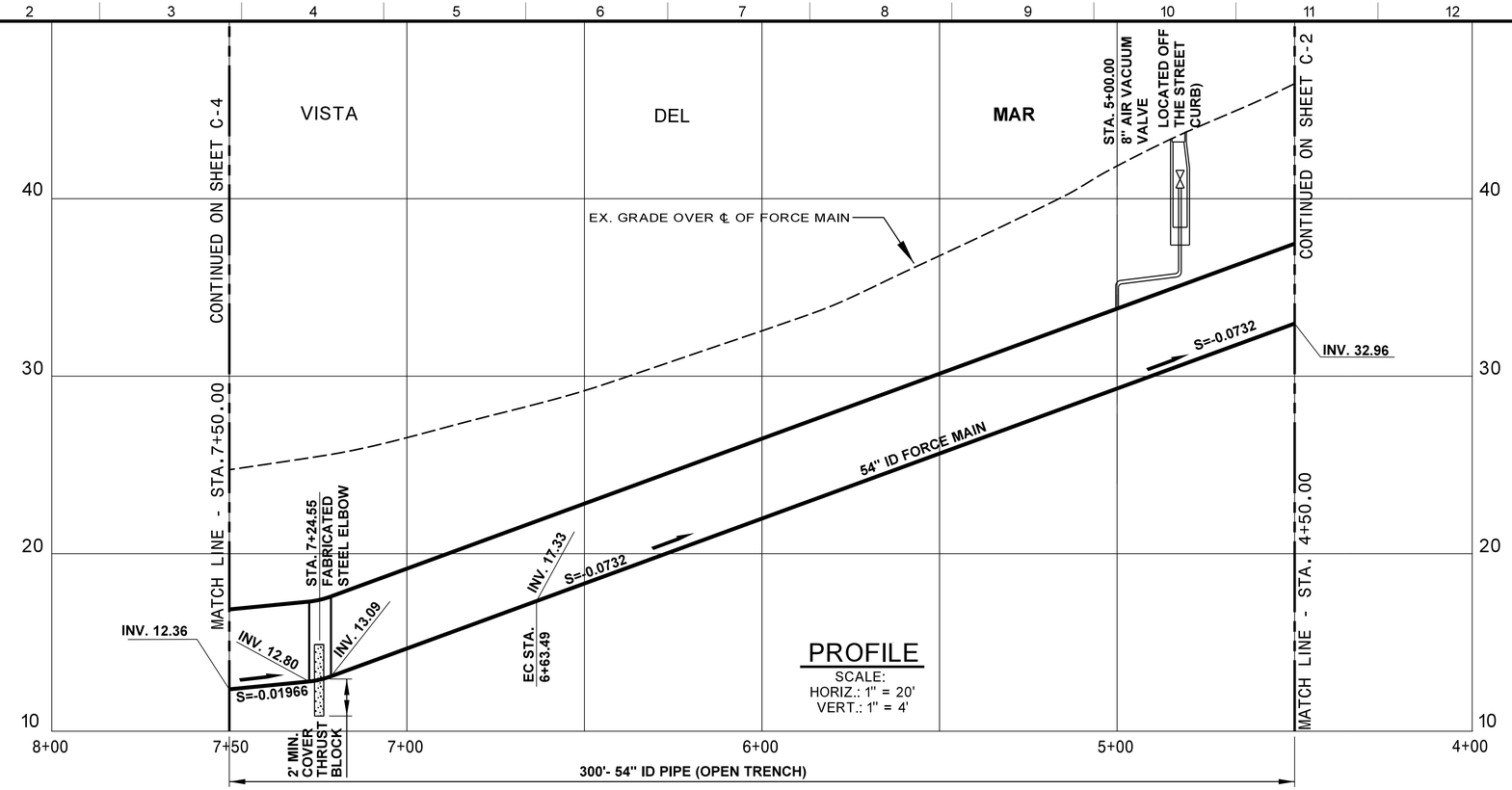


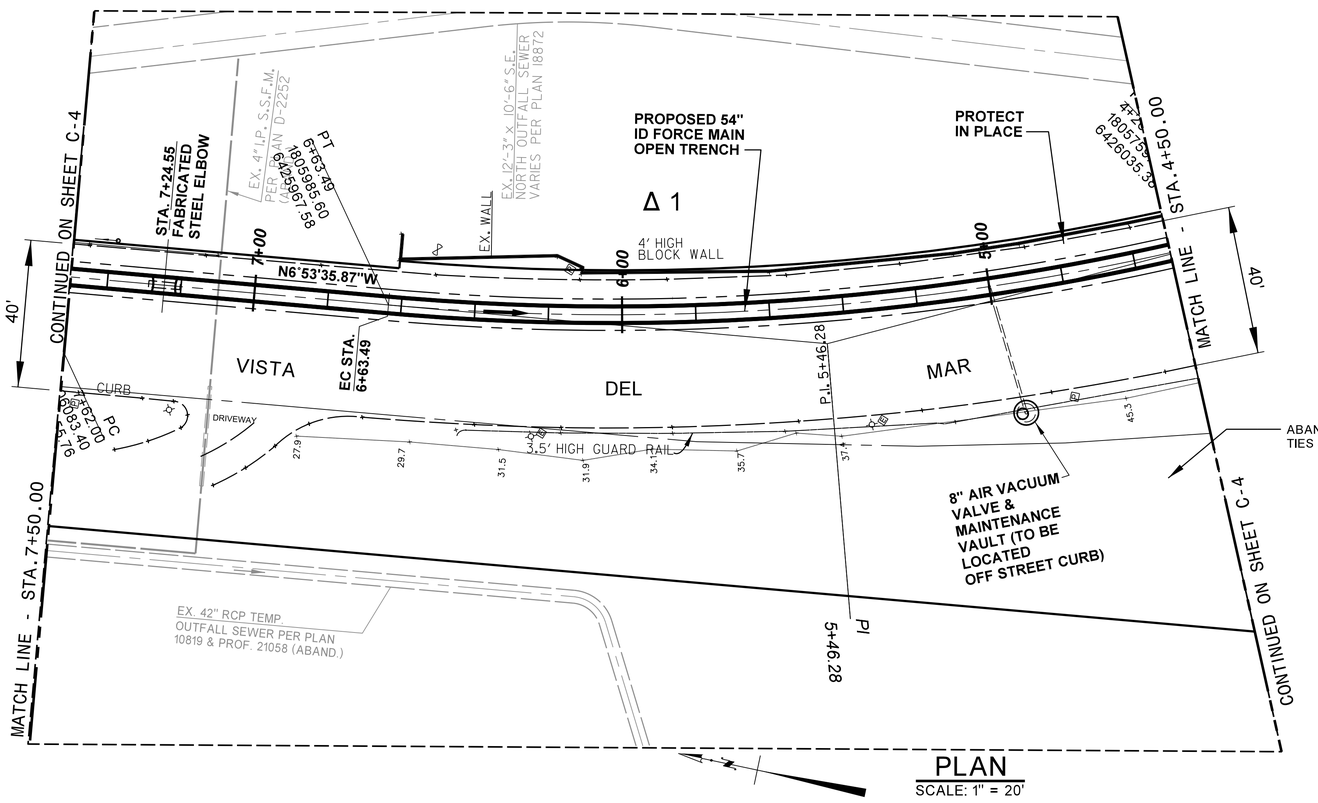


℄ CURVE DATA

| | Δ | R | L | T |
|---|---|---|---|---|
| 1 | 19° 39' 38" | 690.00 | 236.77' | 119.56 |

NOTE:

1. TO PROTECT THE EXISTING UTILITIES, EXCAVATE BY HAND WHEN TRENCHING PROCEED TO WITHIN 5 FEET OF THE POTHOLED LOCATION.

NOT FOR CONSTRUCTION

LA DPW ENGINEERING TRANSFORMING LOS ANGELES

CIP NO. AS-BID

INDEX NO.

| NO. | REVISIONS | DATE | BY: |
|---|---|---|---|

CITY OF LOS ANGELES • DEPARTMENT OF PUBLIC WORKS • BUREAU OF ENGINEERING

GARY LEE MOORE, P.E.
CITY ENGINEER

| DESIGN GROUP | | DATE |
|---|---|---|
| ENGINEER: | SEAN ZAHEDI/DARSHNA PATEL LIC. NO. C-75974 | 07-14 |
| DESIGNED BY: | DARSHNA PATEL, CAN CHOW | 07-14 |
| DRAWN BY: | CAN CHOW, HIEP LAM | 07-14 |
| CHECKED BY: | ABID CHOWDHRY, P.E. | 07-14 |
| APPROVED BY: | BRAD JENSON, P.E. | 07-14 |

VERTICAL CONTROL: NGVD29, 1985 ADJ.
HORIZONTAL CONTROL: NAD83, EPOCH 1991.5

SHEET TITLE: PLAN & PROFILE (STA. 4+50 TO STA. 7+50)

PROJECT: VENICE DUAL FORCE MAIN

ADDRESS: MARINA DEL REY, CALIFORNIA

WORK ORDER NO. SZC11631

DRAWING NO. C-3

SHEET 9

REVISION DATES (DESIGN STAGE ONLY)

FILE: Q:\CAD DATA\SZCxxxxx\szc11631\civil\asbid\wdfmDc03.dgn
DATE: 09-Jul-14 09:187/17/2014 2:40:59 PM

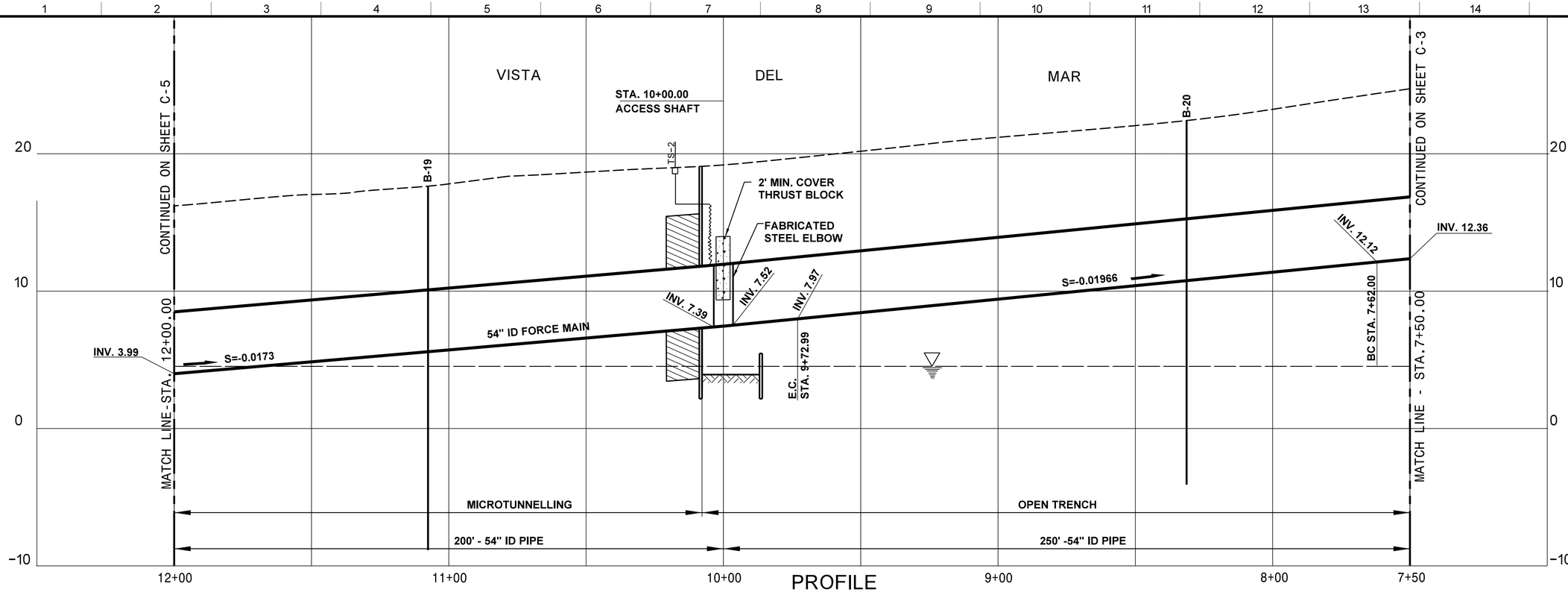


## PROFILE

SCALE:
HORIZ.: 1" = 20'
VERT.: 1" = 4'

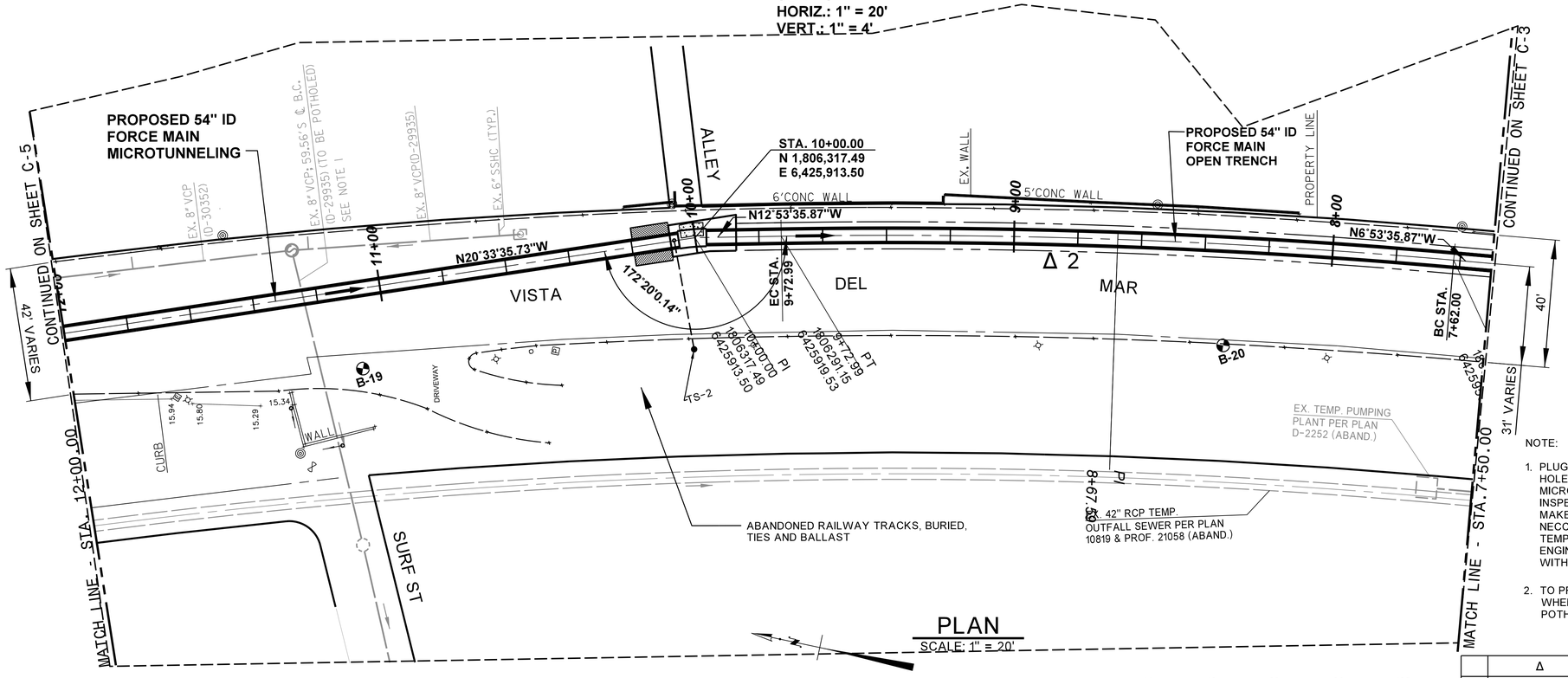


## PLAN

SCALE: 1" = 20'

LEGEND

GROUND TREATMENT

NOTE:

1. PLUG 8" SEWER AT UPSTREAM MAINTENANCE HOLE, PROVIDE TEMPORARY BYPASS DURING MICROTUNNEL CONSTRUCTION. PERFORM CCTV INSPECTION AFTER FORCE MAIN IS INSTALLED. MAKE REPAIR TO SEWER LINE WHEN NECCESSARY. REMOVE TEMPORARY PLUG AND TEMPORARY BYPASS UPON APPROVAL FROM ENGINEER. BACKFILL TRENCH EXCAVATION WITH 2-SACK CONCRETE SLURRY.
2. TO PROTECT THE EXISTING UTILITIES, EXCAVATE BY HAND WHEN TRENCHING PROCEED TO WITHIN 5 FEET OF THE POTHOLED LOCATION.

℄ CURVE DATA

| | Δ | R | L | T |
|---|---|---|---|---|
| 2 | 6° 00' 00" | 2014.80' | 210.99' | 105.59' |

NOT FOR CONSTRUCTION

LA DPW ENGINEERING TRANSFORMING LOS ANGELES

BUREAU OF ENGINEERING

| NO. | REVISIONS | DATE | BY: |
|---|---|---|---|

CIP NO. AS-BID

INDEX NO.

PUBLIC WORKS

CITY ENGINEER: GARY LEE MOORE, P.E.

| DESIGN GROUP | | DATE |
|---|---|---|
| ENGINEER: | SEAN ZAHEDI/DARSHNA PATEL LIC. NO. C-75974 | 07-14 |
| DESIGNED BY: | DARSHNA PATEL, CAN CHOW | 07-14 |
| DRAWN BY: | CAN CHOW, HIEP LAM | 07-14 |
| CHECKED BY: | ABID CHOWDHRY, P.E. | 07-14 |
| APPROVED BY: | BRAD JENSON, P.E. | 07-14 |

DEPARTMENT OF PUBLIC WORKS

CITY OF LOS ANGELES

VERTICAL CONTROL: NGVD29, 1985 ADJ
HORIZONTAL CONTROL: NAD83, EPOCH 1991.5

SHEET TITLE: PLAN & PROFILE (STA. 7+50 TO STA. 12+00)

PROJECT: VENICE DUAL FORCE MAIN

ADDRESS: MARINA DEL REY, CALIFORNIA

WORK ORDER NO. SZC11631

DRAWING NO. C-4

SHEET 10

REVISION DATES (DESIGN STAGE ONLY)

FILE: Q:\CAD DATA\SZCxxxx\szc11631\civil\asbid\vdfmDc04.dgn
DATE: 09-Jul-14 09:20:17/17/2014 3:20:41 PM

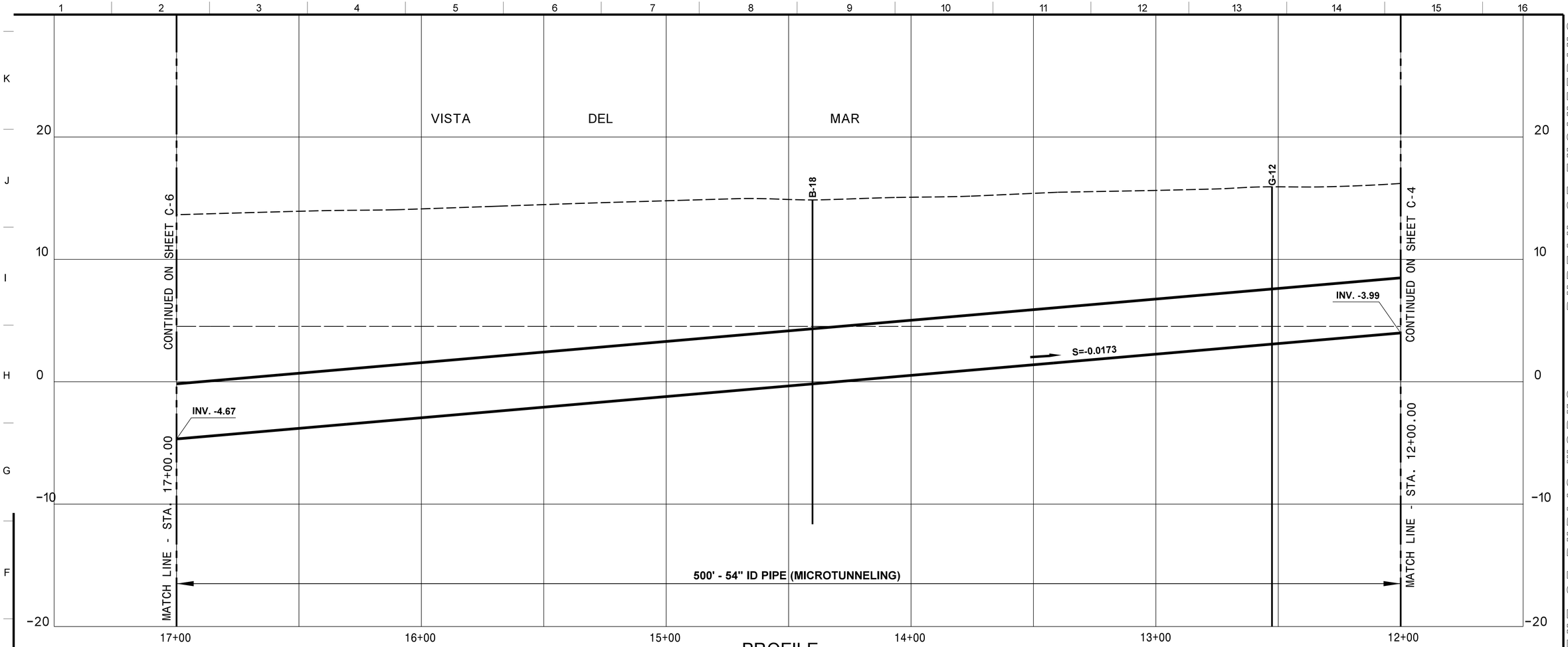


## PROFILE

SCALE:
HORIZ.: 1" = 20'
VERT.: 1" = 4'

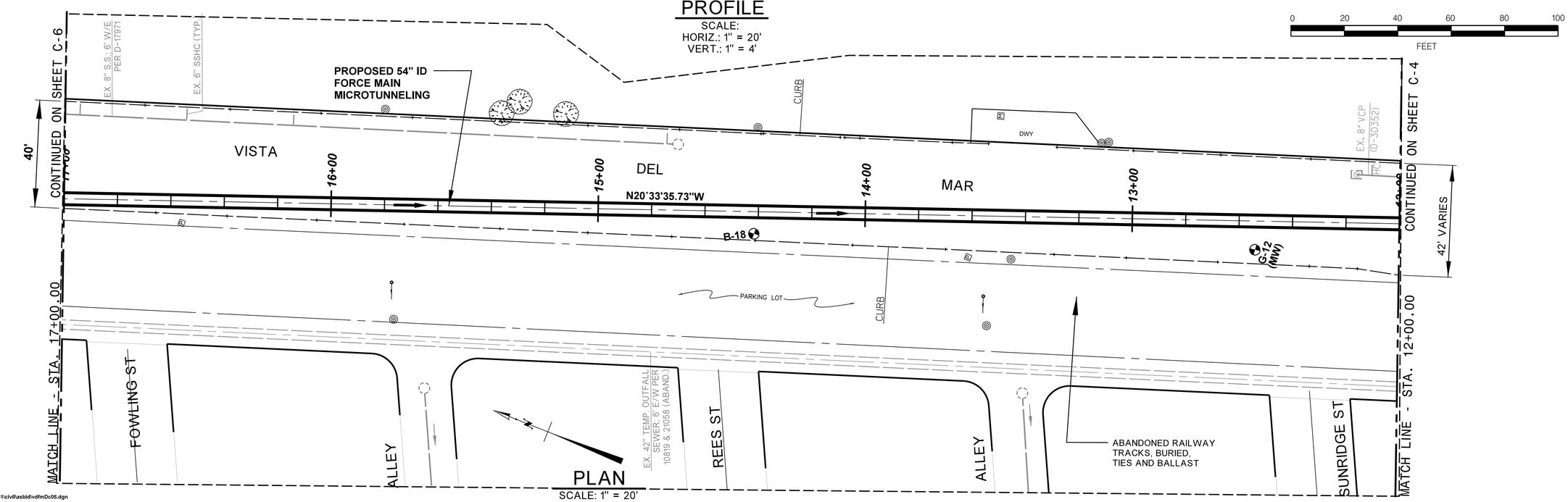


## PLAN

SCALE: 1" = 20'

FILE: Q:\CAD DATA\SZCxxxxx\szc11631\civil\asbid\vdfmDc05.dgn
DATE: 09-Jul-14 09:22

REVISION DATES (DESIGN STAGE ONLY)

FILE: Q:\CAD DATA\SZCxxxxx\szc11631\civil\asbid\vdfmDc05.dgn
DATE:7/17/2014 2:19:28 PM

CITY OF LOS ANGELES • DEPARTMENT OF PUBLIC WORKS • BUREAU OF ENGINEERING

LA DPW ENGINEERING TRANSFORMING LOS ANGELES

| NO. | REVISIONS | DATE | BY: |
|---|---|---|---|

INDEX NO.

CIP NO. AS-BID

GARY LEE MOORE, P.E.
CITY ENGINEER

| DESIGN GROUP | | DATE |
|---|---|---|
| ENGINEER: | SEAN ZAHEDI/DARSHNA PATEL LIC. NO. C-75974 | 07-14 |
| DESIGNED BY: | DARSHNA PATEL, CAN CHOW | 07-14 |
| DRAWN BY: | CAN CHOW, HIEP LAM | 07-14 |
| CHECKED BY: | ABID CHOWDHRY, P.E. | 07-14 |
| APPROVED BY: | BRAD JENSON, P.E. | 07-14 |

VERTICAL CONTROL: NGVD29, 1985 ADJ.
HORIZONTAL CONTROL: NAD83, EPOCH 1991.5

SHEET TITLE: PLAN & PROFILE (STA. 12+00 TO STA. 17+00)

PROJECT: VENICE DUAL FORCE MAIN

ADDRESS: MARINA DEL REY, CALIFORNIA

WORK ORDER NO. SZC11631

DRAWING NO. C-5

SHEET 11

NOT FOR CONSTRUCTION

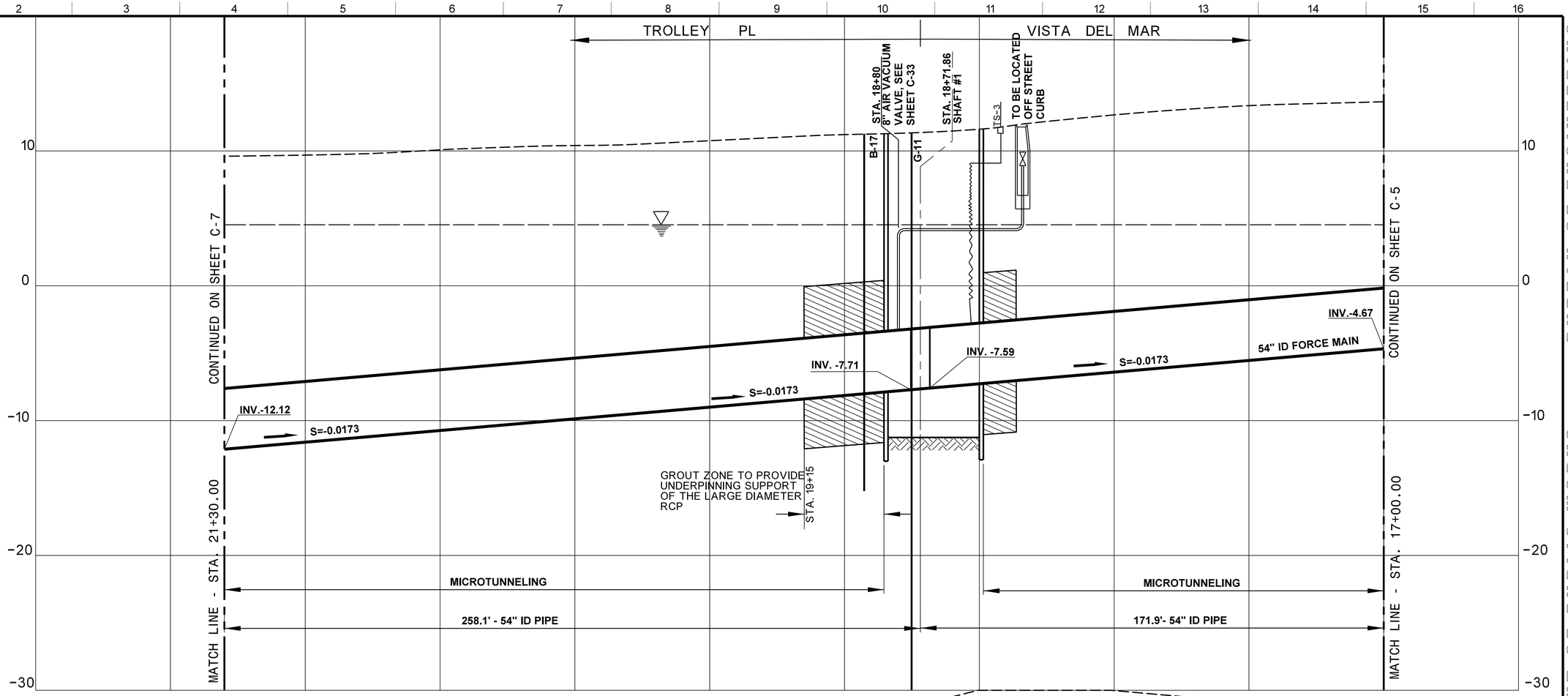


PROFILE
SCALE:
HORIZ.: 1" = 20'
VERT.: 1" = 4'

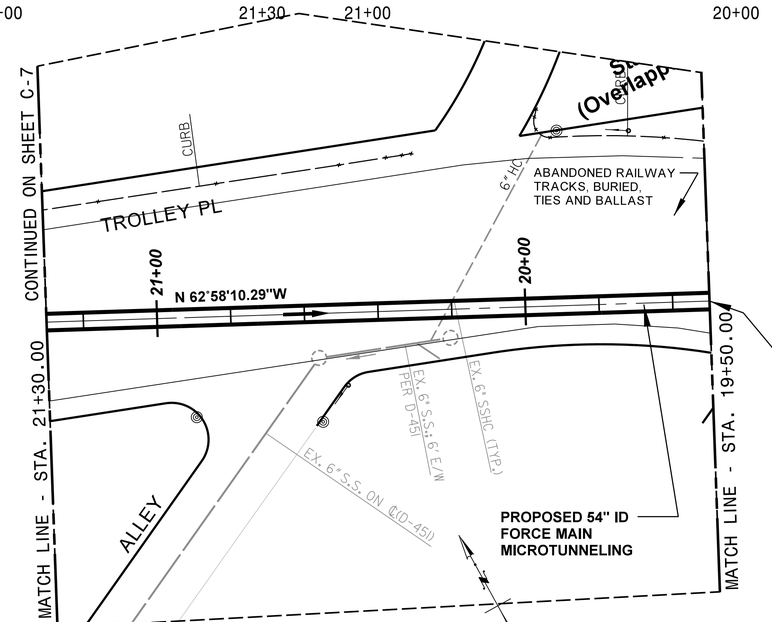


PLAN
SCALE: 1" = 20'

0 20 40 60 80 100
FEET

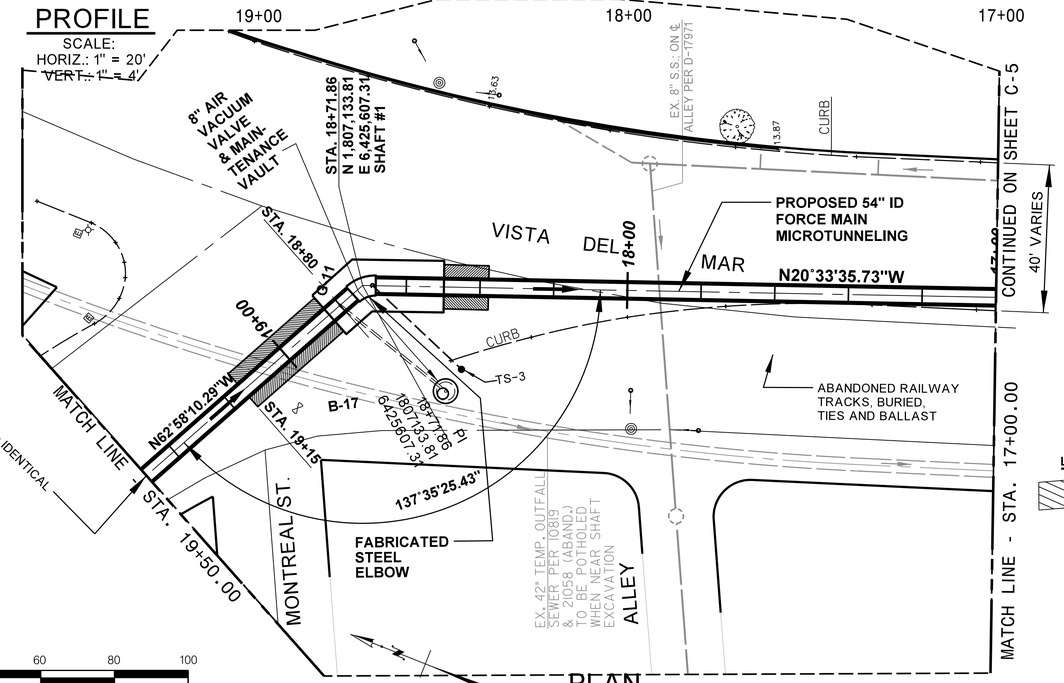


PLAN
SCALE: 1" = 20'

LEGEND
GROUND TREATMENT

NOT FOR CONSTRUCTION

CITY OF LOS ANGELES • DEPARTMENT OF PUBLIC WORKS • BUREAU OF ENGINEERING

LA DPW ENGINEERING TRANSFORMING LOS ANGELES

| NO. | REVISIONS | DATE | BY: |
|---|---|---|---|

INDEX NO.

CIP NO. AS-BID

CITY ENGINEER: GARY LEE MOORE, P.E.

DESIGN GROUP

| | | DATE |
|---|---|---|
| ENGINEER: | SEAN ZAHEDI/DARSHNA PATEL LIC. NO. C-75974 | 07-14 |
| DESIGNED BY: | DARSHNA PATEL, CAN CHOW | 07-14 |
| DRAWN BY: | CAN CHOW, HIEP LAM | 07-14 |
| CHECKED BY: | ABID CHOWDHRY, P.E. | 07-14 |
| APPROVED BY: | BRAD JENSON, P.E. | 07-14 |

VERTICAL CONTROL: NGVD29, 1985 ADJ.
HORIZONTAL CONTROL: NAD83, EPOCH 1991.5

SHEET TITLE: PLAN & PROFILE (STA. 17+00 TO STA. 21+30)

PROJECT: VENICE DUAL FORCE MAIN

ADDRESS: MARINA DEL REY, CALIFORNIA

WORK ORDER NO. SZC11631

DRAWING NO. C-6

SHEET 12

REVISION DATES (DESIGN STAGE ONLY)

FILE: Q:\CAD DATA\SZCxxxxx\szc11631\civil\asbid\vdfmDc06.dgn
DATE: 09-Jul-14 09:23

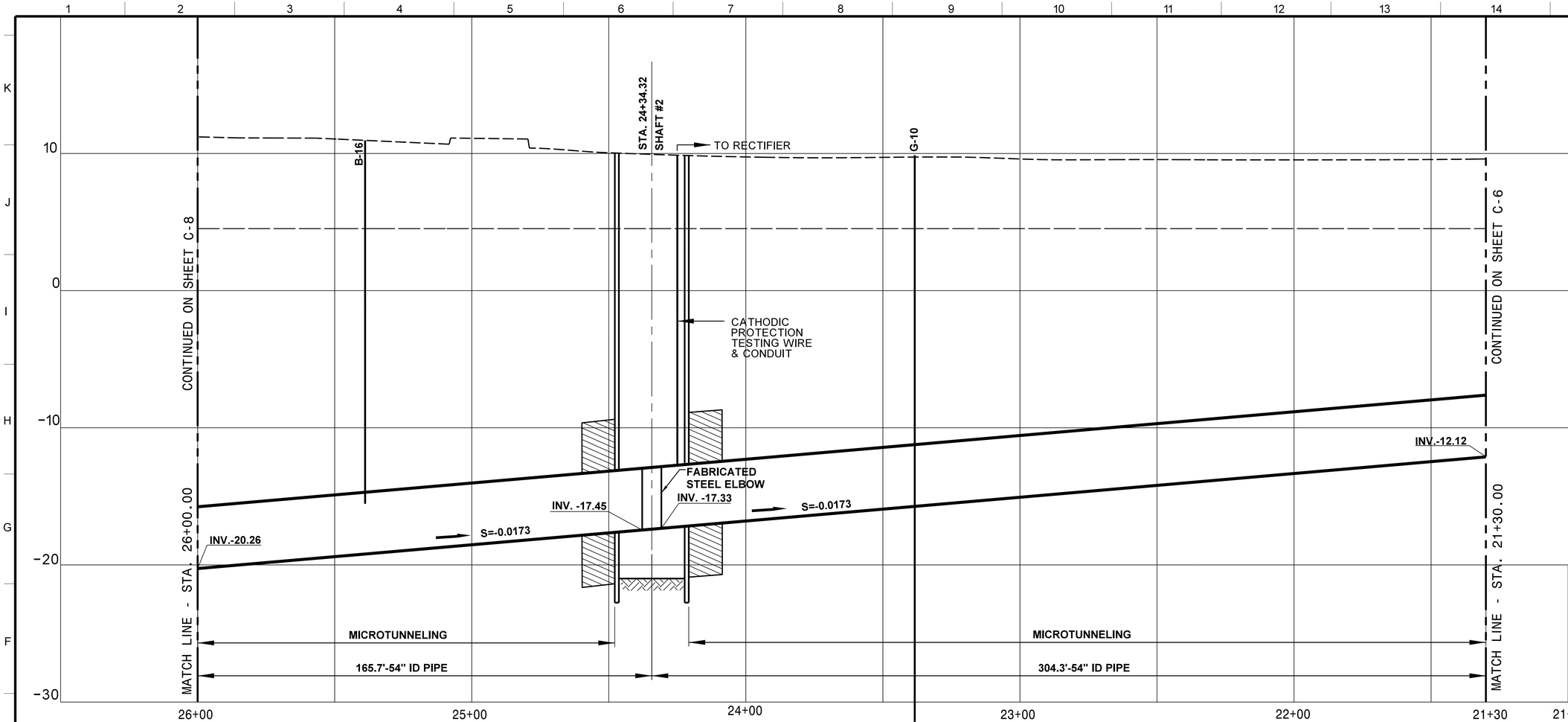


## PROFILE

SCALE:
HORIZ.: 1" = 20'
VERT.: 1" = 4'

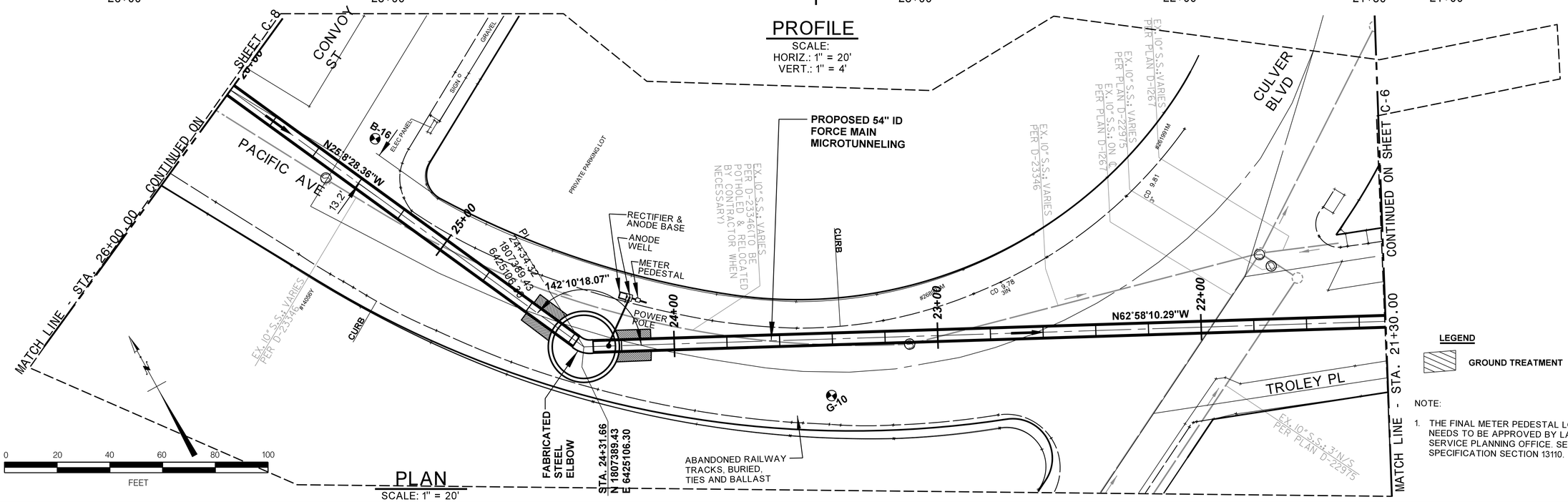


## PLAN

SCALE: 1" = 20'

**LEGEND**

GROUND TREATMENT

NOTE:

1. THE FINAL METER PEDESTAL LOCATION NEEDS TO BE APPROVED BY LADWP'S SERVICE PLANNING OFFICE. SEE SPECIFICATION SECTION 13110.

NOT FOR CONSTRUCTION

LA DPW ENGINEERING TRANSFORMING LOS ANGELES

CIP NO. AS-BID

INDEX NO.

| NO. | REVISIONS | DATE | BY: |
|---|---|---|---|

CITY OF LOS ANGELES • DEPARTMENT OF PUBLIC WORKS • BUREAU OF ENGINEERING

CITY ENGINEER: GARY LEE MOORE, P.E.

| DESIGN GROUP | | DATE |
|---|---|---|
| ENGINEER: | SEAN ZAHEDI/DARSHNA PATEL LIC. NO. C-75974 | 07-14 |
| DESIGNED BY: | DARSHNA PATEL, CAN CHOW | 07-14 |
| DRAWN BY: | CAN CHOW, HIEP LAM | 07-14 |
| CHECKED BY: | ABID CHOWDHRY, P.E. | 07-14 |
| APPROVED BY: | BRAD JENSON, P.E. | 07-14 |

VERTICAL CONTROL: NGVD29, 1985 ADJ
HORIZONTAL CONTROL: NAD83, EPOCH 1991.5

SHEET TITLE: PLAN & PROFILE (STA. 21+30 TO STA. 26+00)

PROJECT: VENICE DUAL FORCE MAIN

ADDRESS: MARINA DEL REY, CALIFORNIA

WORK ORDER NO. SZC11631

DRAWING NO. C-7

SHEET 13

REVISION DATES (DESIGN STAGE ONLY)

FILE: Q:\CAD DATA\SZCxxxxx\szc11631\civil\asbid\vdfmDc07.dgn
DATE: 09-Jul-14 09:25

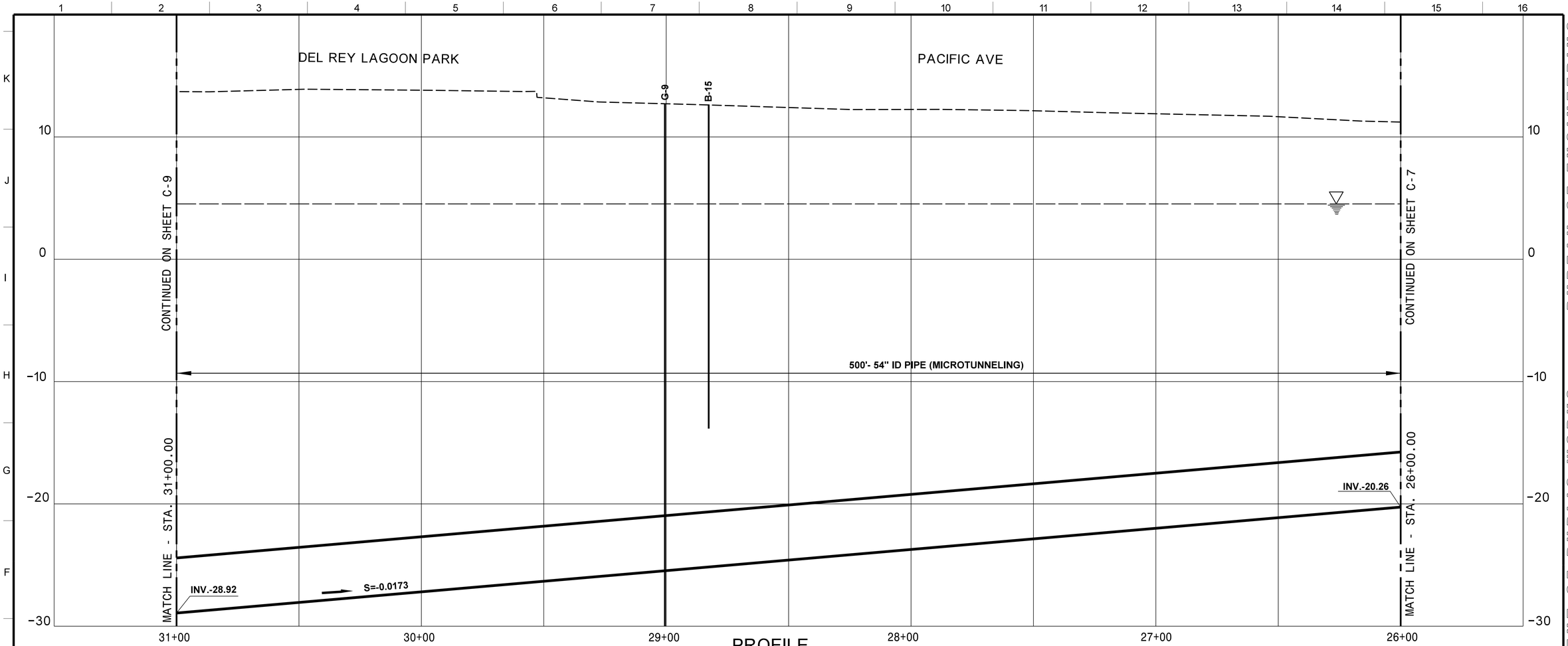


## PROFILE

SCALE:
HORIZ.: 1" = 20'
VERT.: 1" = 4'

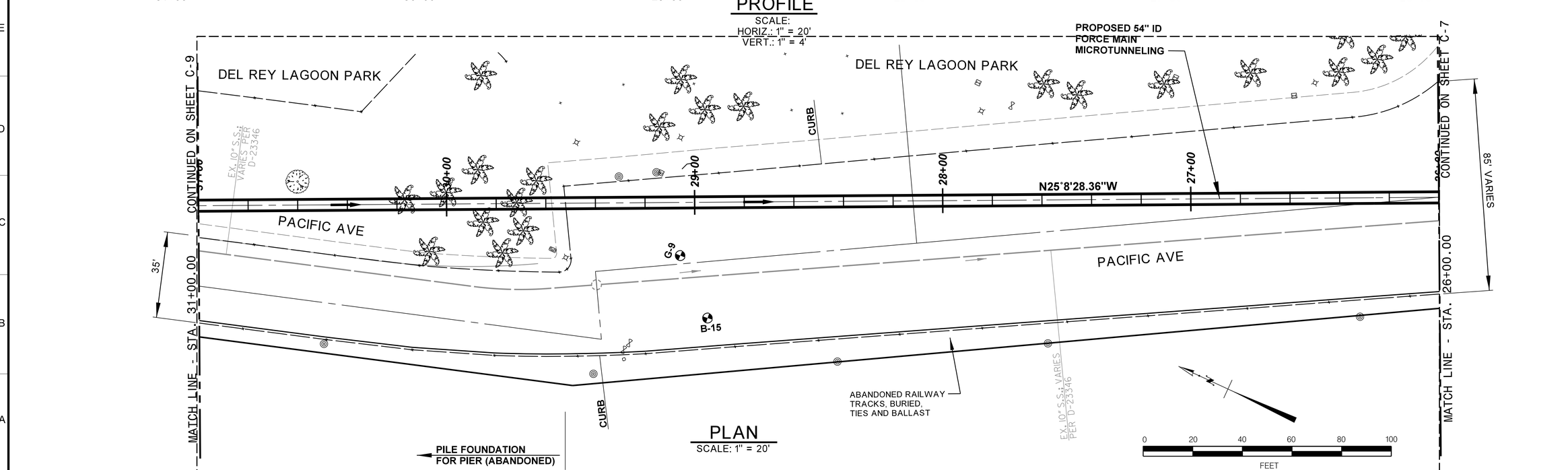


## PLAN

SCALE: 1" = 20'

CITY OF LOS ANGELES • DEPARTMENT OF PUBLIC WORKS • BUREAU OF ENGINEERING

LA DPW ENGINEERING TRANSFORMING LOS ANGELES

| NO. | REVISIONS | DATE | BY: |
|---|---|---|---|

CIP NO. AS-BID

INDEX NO.

NOT FOR CONSTRUCTION

| CITY ENGINEER | DATE |
|---|---|
| GARY LEE MOORE, P.E. | |
| DESIGN GROUP | |
| ENGINEER: SEAN ZAHEDI/DARSHNA PATEL LIC. NO. C-75974 | 07-14 |
| DESIGNED BY: DARSHNA PATEL, CAN CHOW | 07-14 |
| DRAWN BY: CAN CHOW, HIEP LAM | 07-14 |
| CHECKED BY: ABID CHOWDHRY, P.E. | 07-14 |
| APPROVED BY: BRAD JENSON, P.E. | 07-14 |

VERTICAL CONTROL: NGVD29, 1985 ADJ
HORIZONTAL CONTROL: NAD83, EPOCH 1991.5

SHEET TITLE: PLAN AND PROFILE (STA. 26+00 TO STA. 31+00)

PROJECT: VENICE DUAL FORCE MAIN

ADDRESS: MARINA DEL REY, CALIFORNIA

WORK ORDER NO. SZC11631

DRAWING NO. C-8

SHEET 14

REVISION DATES (DESIGN STAGE ONLY)

FILE: Q:\CAD DATA\SZCxxxxx\szc11631\civil\asbid\vdfmDc08.dgn
DATE: 09-Jul-14 09:26

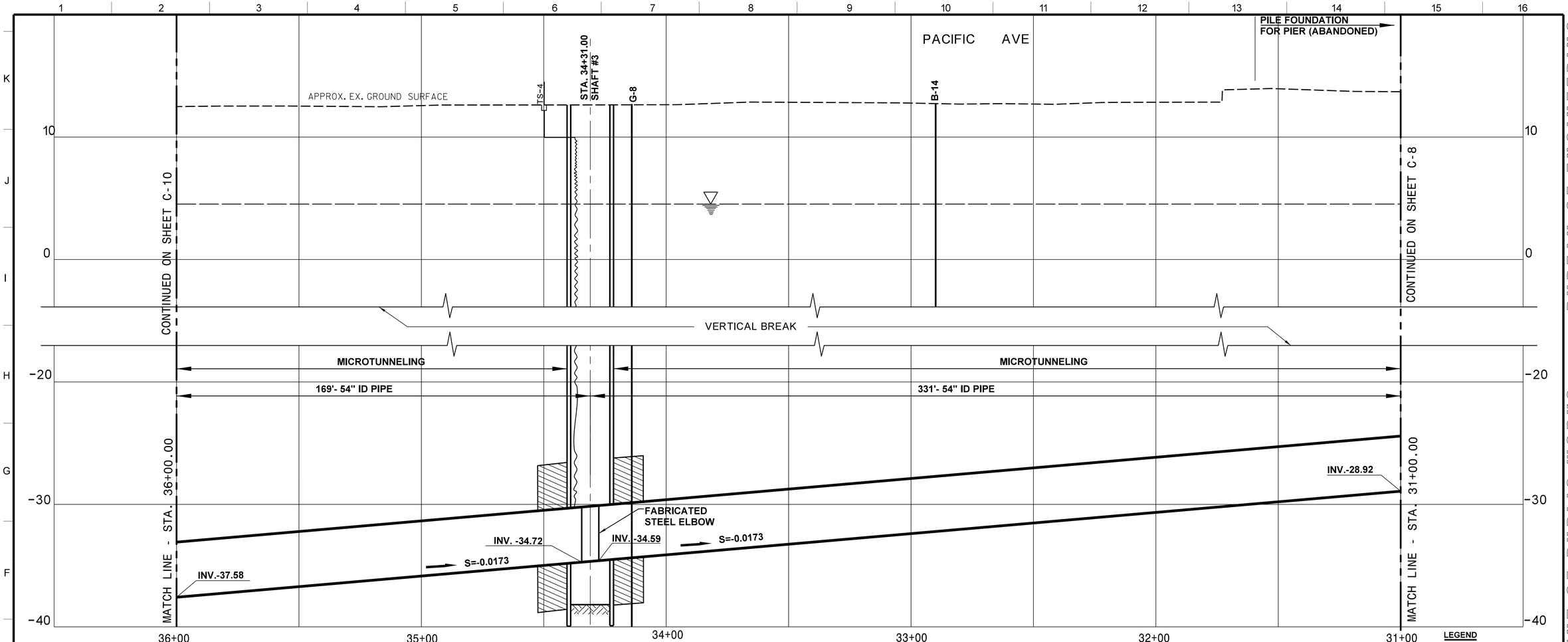


## PROFILE

SCALE:
HORIZ.: 1" = 20'
VERT.: 1" = 4'

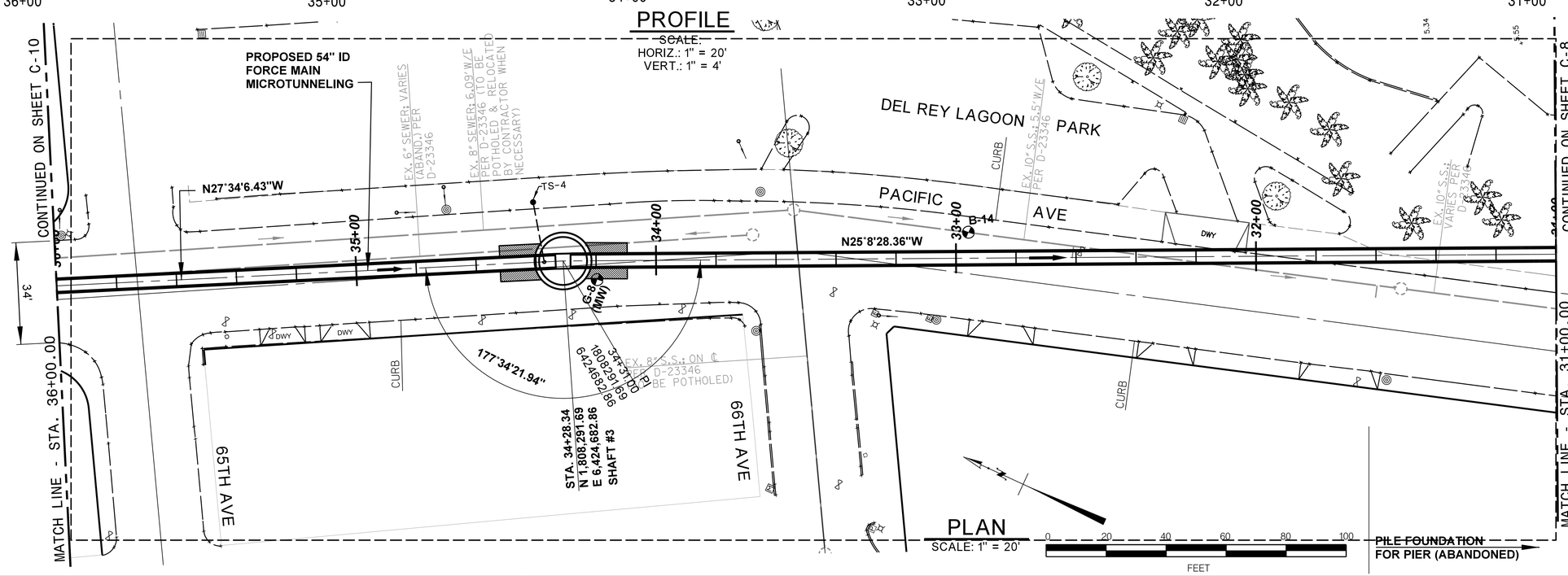


## PLAN

SCALE: 1" = 20'

0 20 40 60 80 100
FEET

PILE FOUNDATION FOR PIER (ABANDONED)

**LEGEND**

GROUND TREATMENT

REVISION DATES (DESIGN STAGE ONLY)

FILE: Q:\CAD DATA\SZCxxxxx\szc11631\civil\asbid\vdfmDc09.dgn
DATE: 09-Jul-14 09:27

CITY OF LOS ANGELES • DEPARTMENT OF PUBLIC WORKS • BUREAU OF ENGINEERING

LA DPW ENGINEERING TRANSFORMING LOS ANGELES

| REVISIONS | | |
|---|---|---|
| NO. | DATE | BY: |

CIP NO. AS-BID

INDEX NO.

NOT FOR CONSTRUCTION

CITY ENGINEER: GARY LEE MOORE, P.E. — DATE

DESIGN GROUP

ENGINEER: SEAN ZAHEDI/DARSHNA PATEL LIC. NO. C-75974 — 07-14
DESIGNED BY: DARSHNA PATEL, CAN CHOW — 07-14
DRAWN BY: CAN CHOW, HIEP LAM — 07-14
CHECKED BY: ABID CHOWDHRY, P.E. — 07-14
APPROVED BY: BRAD JENSON, P.E. — 07-14

VERTICAL CONTROL: NGVD29, 1985 ADJ
HORIZONTAL CONTROL: NAD83, EPOCH 1991.5

SHEET TITLE: PLAN AND PROFILE (STA. 31+00 TO STA. 36+00)

PROJECT: VENICE DUAL FORCE MAIN

ADDRESS: MARINA DEL REY, CALIFORNIA

WORK ORDER NO. SZC11631

DRAWING NO. C-9

SHEET 15

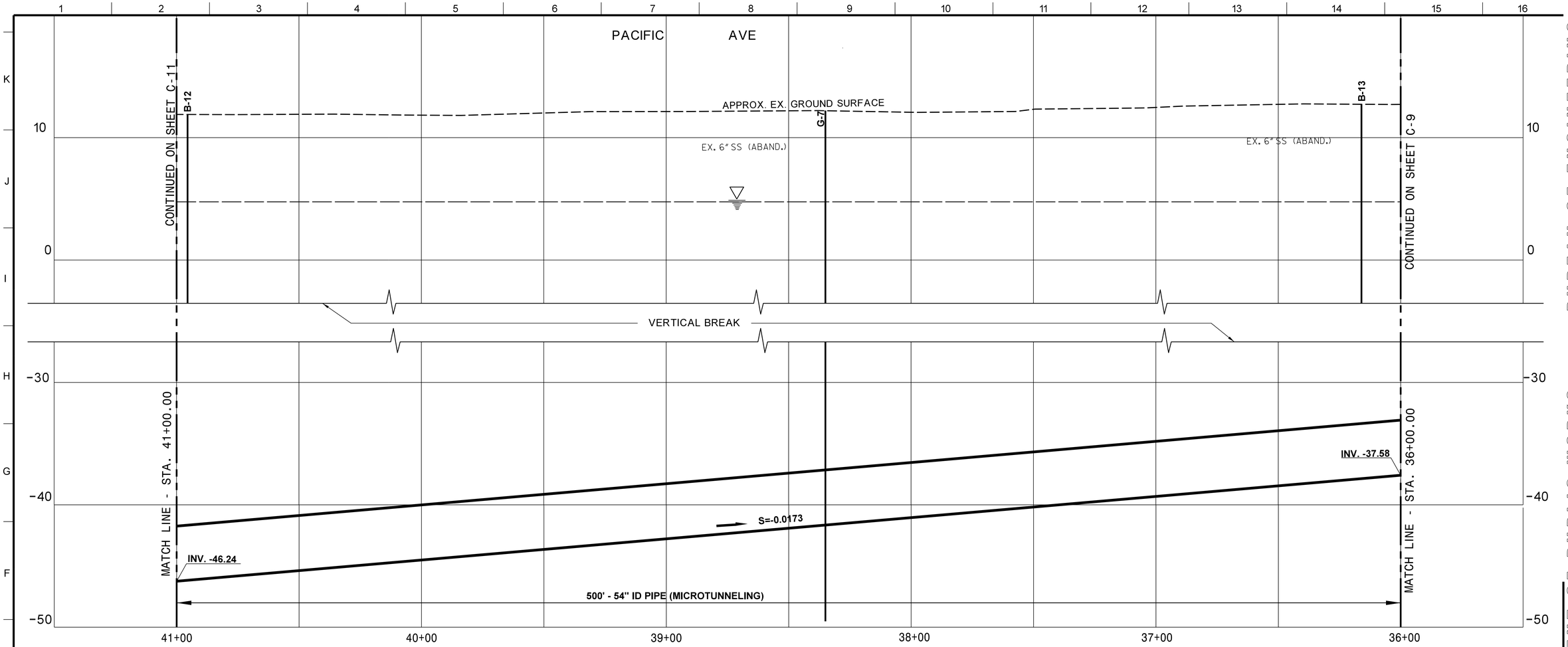


## PROFILE

SCALE:
~~HORIZ.: 1" = 20'~~
VERT.: 1" = 4'

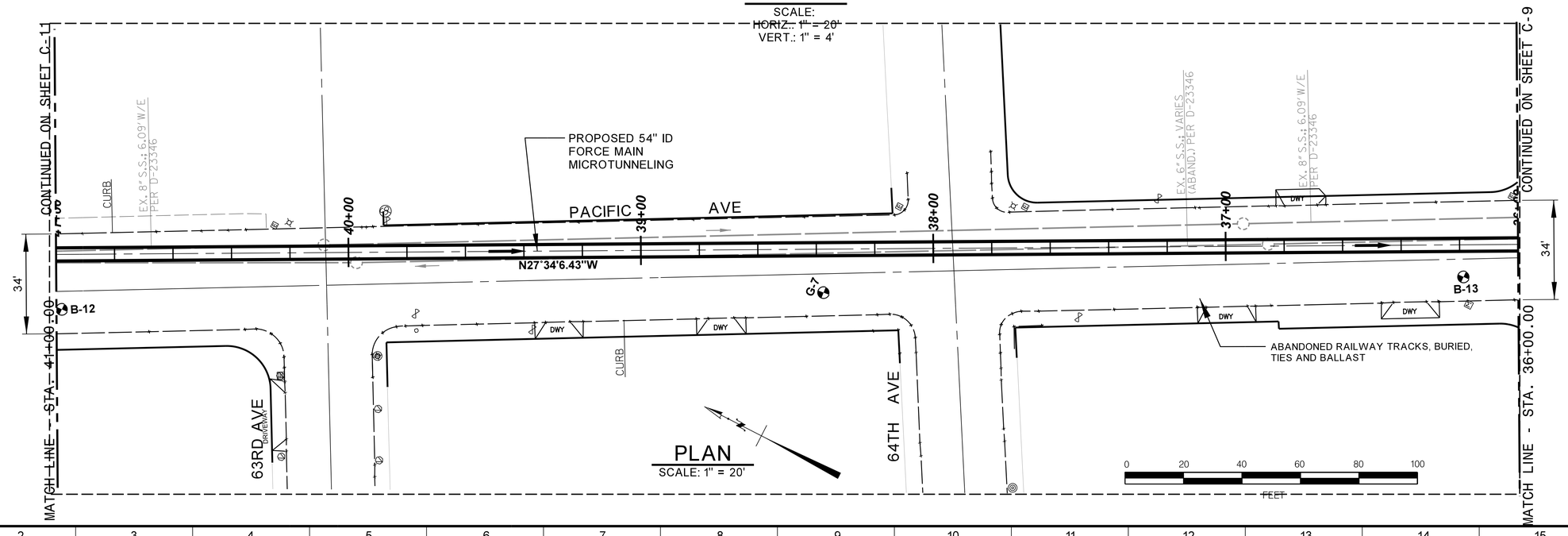


## PLAN

SCALE: 1" = 20'

REVISION DATES (DESIGN STAGE ONLY)

CITY OF LOS ANGELES • DEPARTMENT OF PUBLIC WORKS • BUREAU OF ENGINEERING

LA DPW ENGINEERING TRANSFORMING LOS ANGELES

| NO. | REVISIONS | DATE | BY. |
|---|---|---|---|

CIP NO. AS-BID

INDEX NO.

GARY LEE MOORE, P.E. — CITY ENGINEER

| DESIGN GROUP | | DATE |
|---|---|---|
| ENGINEER: SEAN ZAHEDI/DARSHNA PATEL LIC. NO. C-75974 | | 07-14 |
| DESIGNED BY: DARSHNA PATEL, CAN CHOW | | 07-14 |
| DRAWN BY: CAN CHOW, HIEP LAM | | 07-14 |
| CHECKED BY: ABID CHOWDHRY, P.E. | | 07-14 |
| APPROVED BY: BRAD JENSON, P.E. | | 07-14 |

VERTICAL CONTROL: NGVD29, 1985 ADJ
HORIZONTAL CONTROL: NAD83, EPOCH 1991.5

SHEET TITLE: PLAN AND PROFILE (STA. 36+00 TO STA. 41+00)

PROJECT: VENICE DUAL FORCE MAIN

ADDRESS: MARINA DEL REY, CALIFORNIA

WORK ORDER NO. SZC11631

DRAWING NO. C-10

SHEET 16

NOT FOR CONSTRUCTION

FILE: Q:\CAD DATA\SZCxxxxx\szc11631\civil\asbid\vdfmDc10.dgn
DATE: 09-Jul-14 09:29

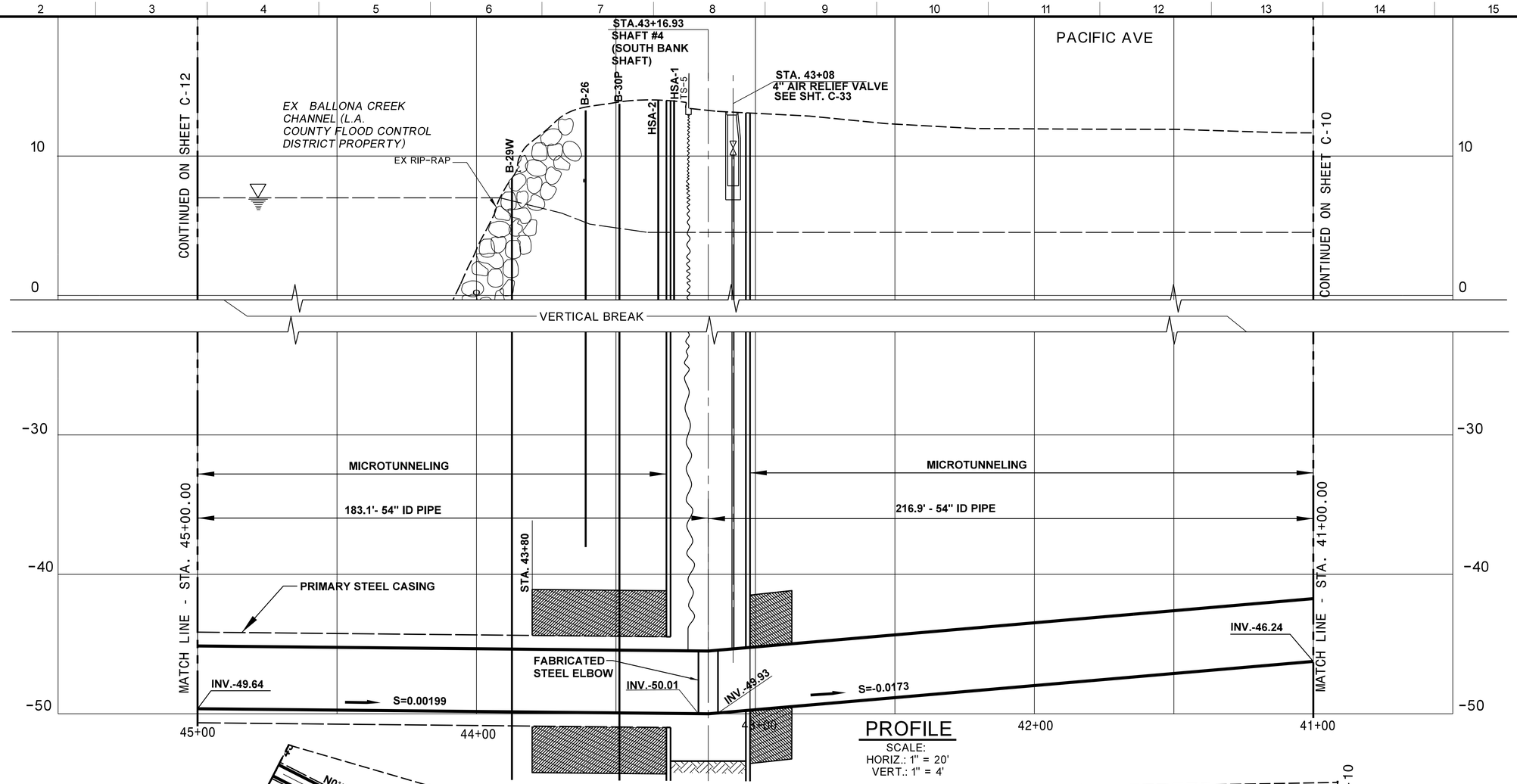


## PROFILE

SCALE:
HORIZ.: 1" = 20'
VERT.: 1" = 4'

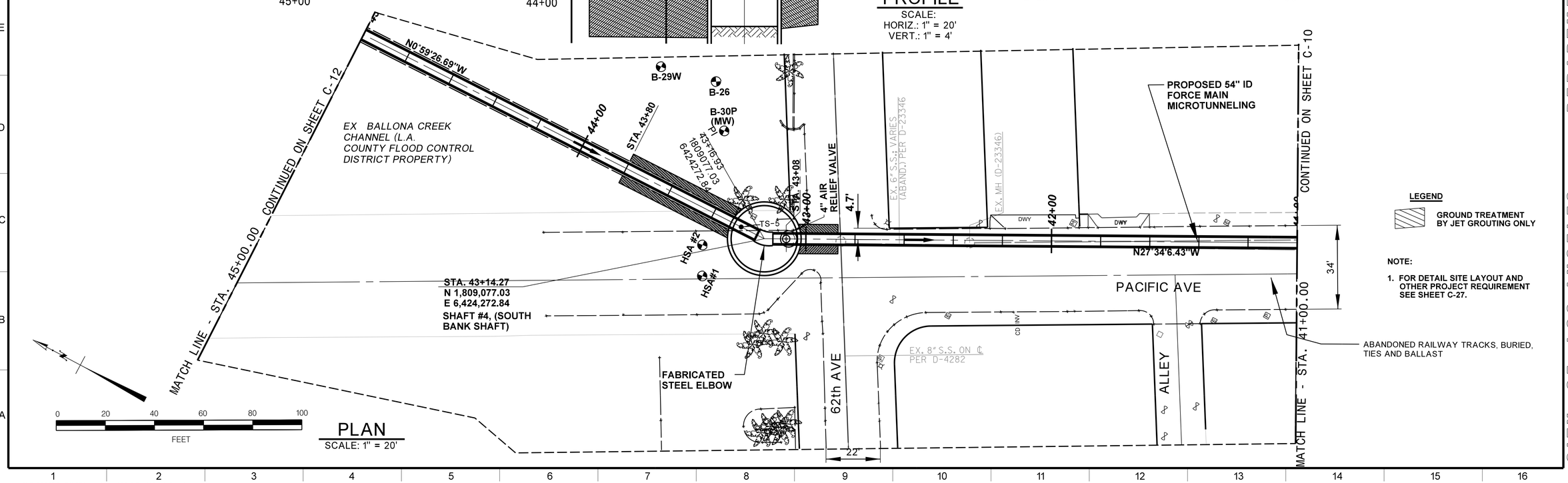


## PLAN

SCALE: 1" = 20'

**LEGEND**

GROUND TREATMENT BY JET GROUTING ONLY

**NOTE:**

1. FOR DETAIL SITE LAYOUT AND OTHER PROJECT REQUIREMENT SEE SHEET C-27.

NOT FOR CONSTRUCTION

LA DPW ENGINEERING TRANSFORMING LOS ANGELES

CITY OF LOS ANGELES • DEPARTMENT OF PUBLIC WORKS • BUREAU OF ENGINEERING

| NO. | REVISIONS | DATE | BY. |
|---|---|---|---|

CIP NO. AS-BID

INDEX NO.

GARY LEE MOORE, P.E.
CITY ENGINEER

| DESIGN GROUP | | DATE |
|---|---|---|
| ENGINEER: | SEAN ZAHEDI/DARSHNA PATEL LIC. NO. C-75974 | 07-14 |
| DESIGNED BY: | DARSHNA PATEL, CAN CHOW | 07-14 |
| DRAWN BY: | CAN CHOW, HIEP LAM | 07-14 |
| CHECKED BY: | ABID CHOWDHRY, P.E. | 07-14 |
| APPROVED BY: | BRAD JENSON, P.E. | 07-14 |

VERTICAL CONTROL: NGVD29, 1985 ADJ.
HORIZONTAL CONTROL: NAD83, EPOCH 1991.5

SHEET TITLE: PLAN AND PROFILE (STA. 41+00 TO STA. 45+00)

PROJECT: VENICE DUAL FORCE MAIN

ADDRESS: MARINA DEL REY, CALIFORNIA

WORK ORDER NO. SZC11631

DRAWING NO. C-11

SHEET 17

REVISION DATES (DESIGN STAGE ONLY)

FILE: Q:\CAD DATA\SZCxxxxx\szc11631\civil\asbid\vdfmDct1.dgn
DATE: 09-Jul-14 09:30

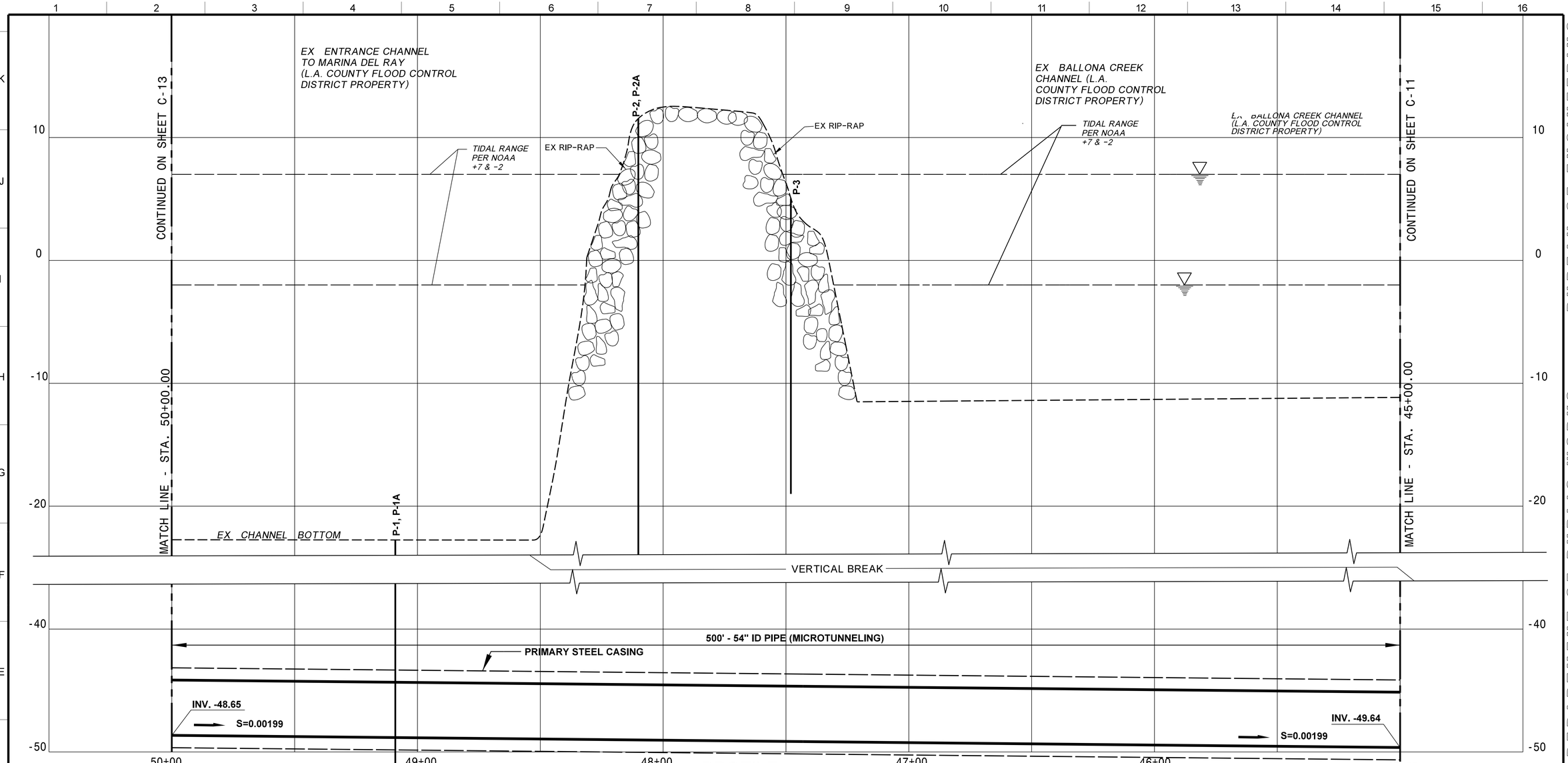


## PROFILE

SCALE:
HORIZ.: 1" = 20'
VERT.: 1" = 4'

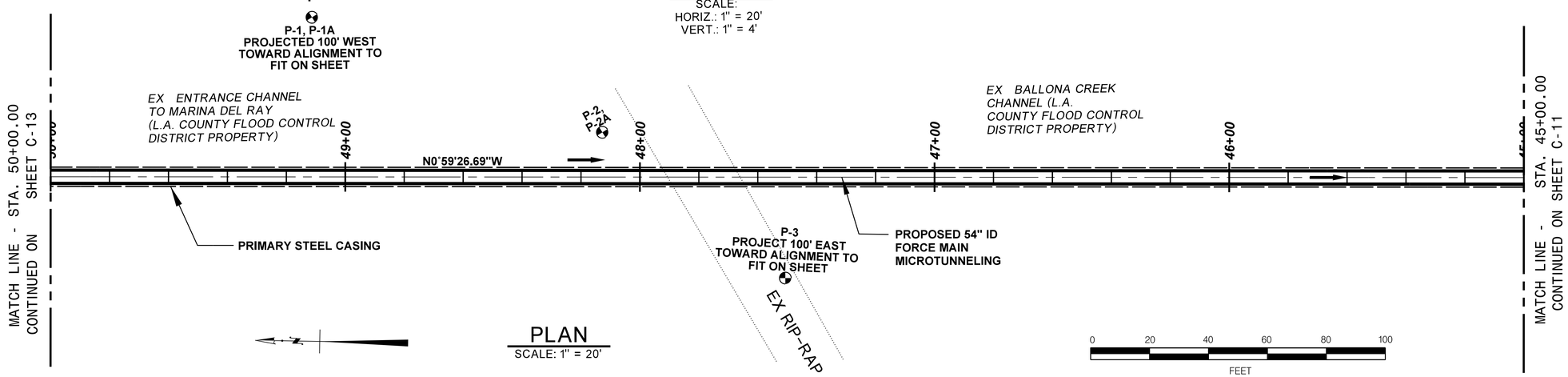


## PLAN

SCALE: 1" = 20'

CITY OF LOS ANGELES • DEPARTMENT OF PUBLIC WORKS • BUREAU OF ENGINEERING

LA DPW ENGINEERING TRANSFORMING LOS ANGELES

| NO. | REVISIONS | BY: | DATE |
|---|---|---|---|

CIP NO. AS-BID

INDEX NO.

| | | DATE |
|---|---|---|
| CITY ENGINEER | GARY LEE MOORE, P.E. | |
| DESIGN GROUP | | |
| ENGINEER: | SEAN ZAHEDI/DARSHNA PATEL LIC. NO. C-75974 | 07-14 |
| DESIGNED BY: | DARSHNA PATEL, CAN CHOW | 07-14 |
| DRAWN BY: | CAN CHOW, HIEP LAM | 07-14 |
| CHECKED BY: | ABID CHOWDHRY, P.E. | 07-14 |
| APPROVED BY: | BRAD JENSON, P.E. | 07-14 |

VERTICAL CONTROL: NGVD29, 1985 ADJ
HORIZONTAL CONTROL: NAD83, EPOCH 1991.5

SHEET TITLE:
PLAN AND PROFILE (STA. 45+00 TO STA. 50+00)

PROJECT: VENICE DUAL FORCE MAIN

ADDRESS: MARINA DEL REY, CALIFORNIA

WORK ORDER NO. SZC11631

DRAWING NO. C-12

SHEET 18

NOT FOR CONSTRUCTION

REVISION DATES (DESIGN STAGE ONLY)

FILE: Q:\CAD DATA\SZCxxxxx\szc11631\civil\asbid\vdfmDc12.dgn
DATE: 09-Jul-14 09:31

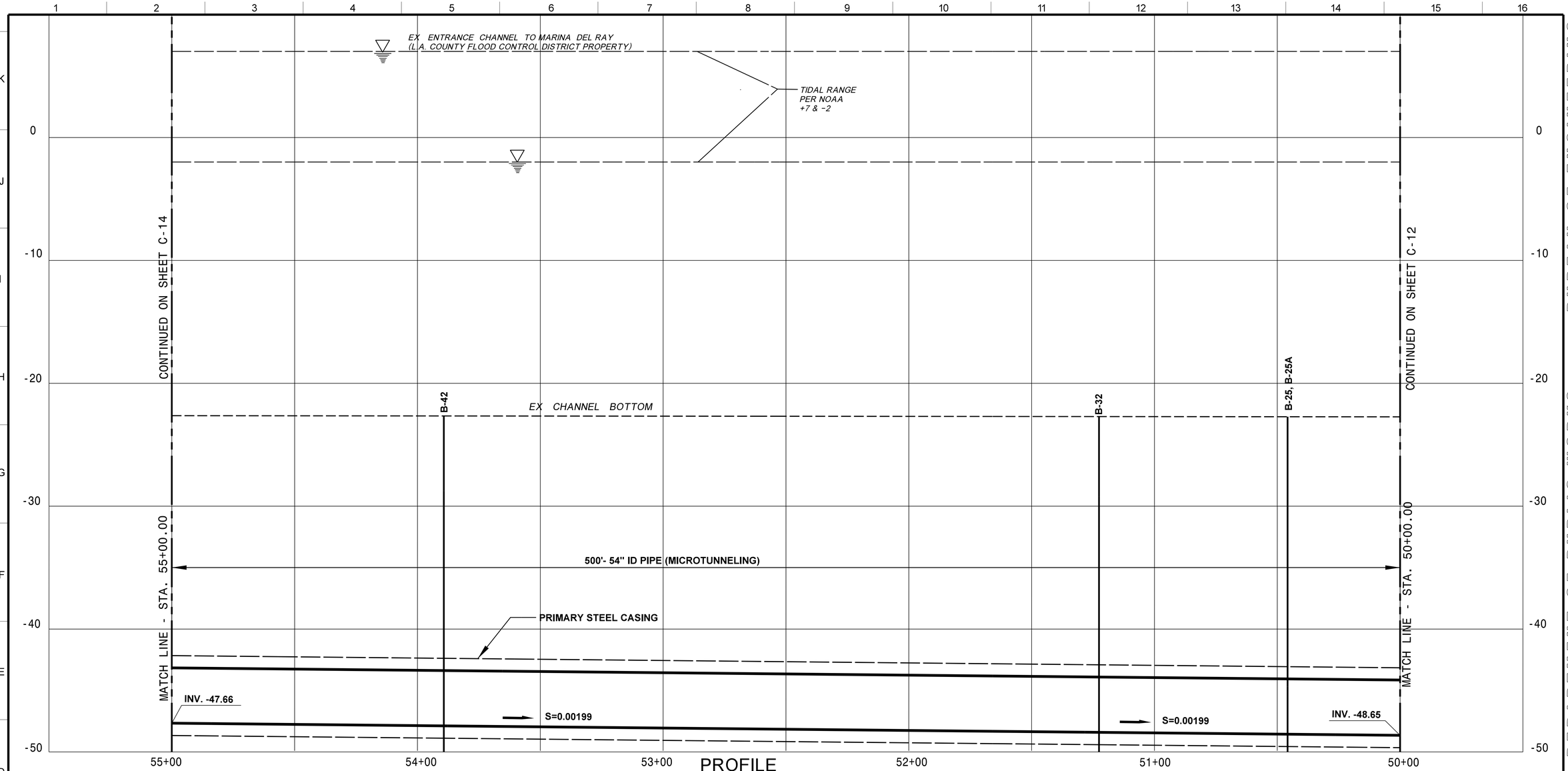


PROFILE

SCALE:
HORIZ.: 1" = 20'
VERT.: 1" = 4'

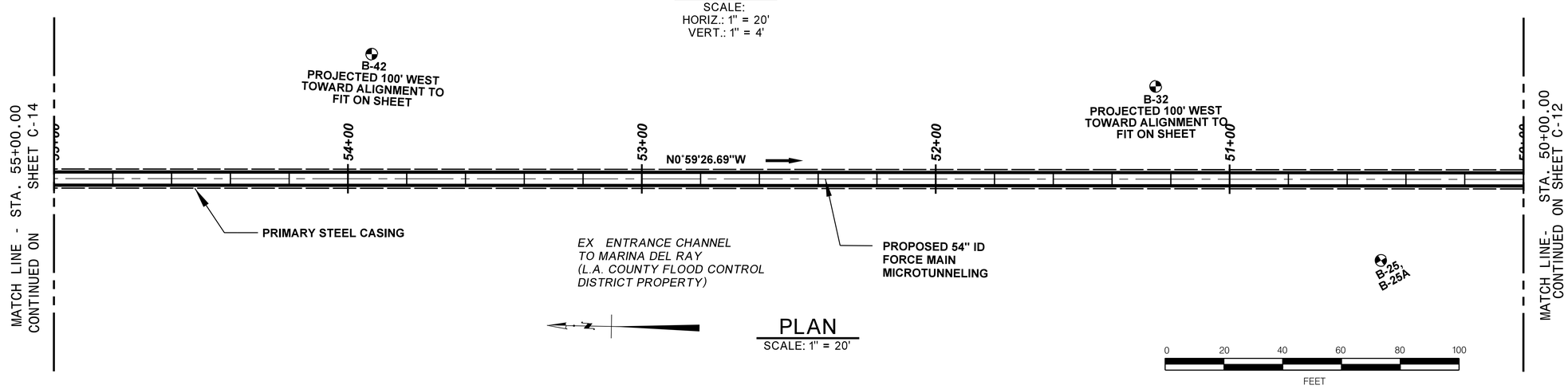


PLAN

SCALE: 1" = 20'

REVISION DATES (DESIGN STAGE ONLY)

FILE: Q:\CAD DATA\SZCxxxxx\szc11631\civil\asbid\vdfmDc13.dgn
DATE: 09-Jul-14 09:33

CITY OF LOS ANGELES • DEPARTMENT OF PUBLIC WORKS • BUREAU OF ENGINEERING

LA DPW ENGINEERING TRANSFORMING LOS ANGELES

| NO. | REVISIONS | DATE | BY: |
|---|---|---|---|

CIP NO. AS-BID

INDEX NO.

| CITY ENGINEER | DATE |
|---|---|
| GARY LEE MOORE, P.E. | |

| DESIGN GROUP | | |
|---|---|---|
| ENGINEER: | SEAN ZAHEDI/DARSHNA PATEL LIC. NO. C-75974 | 07-14 |
| DESIGNED BY: | DARSHNA PATEL, CAN CHOW | 07-14 |
| DRAWN BY: | CAN CHOW, HIEP LAM | 07-14 |
| CHECKED BY: | ABID CHOWDHRY, P.E. | 07-14 |
| APPROVED BY: | BRAD JENSON, P.E. | 07-14 |

VERTICAL CONTROL: NGVD29, 1985 ADJ
HORIZONTAL CONTROL: NAD83, EPOCH 1991.5

SHEET TITLE:
PLAN AND PROFILE (STA. 50+00 TO STA. 55+00)

PROJECT: VENICE DUAL FORCE MAIN

ADDRESS: MARINA DEL REY, CALIFORNIA

WORK ORDER NO.
SZC11631

DRAWING NO.
C-13

SHEET 19

NOT FOR CONSTRUCTION

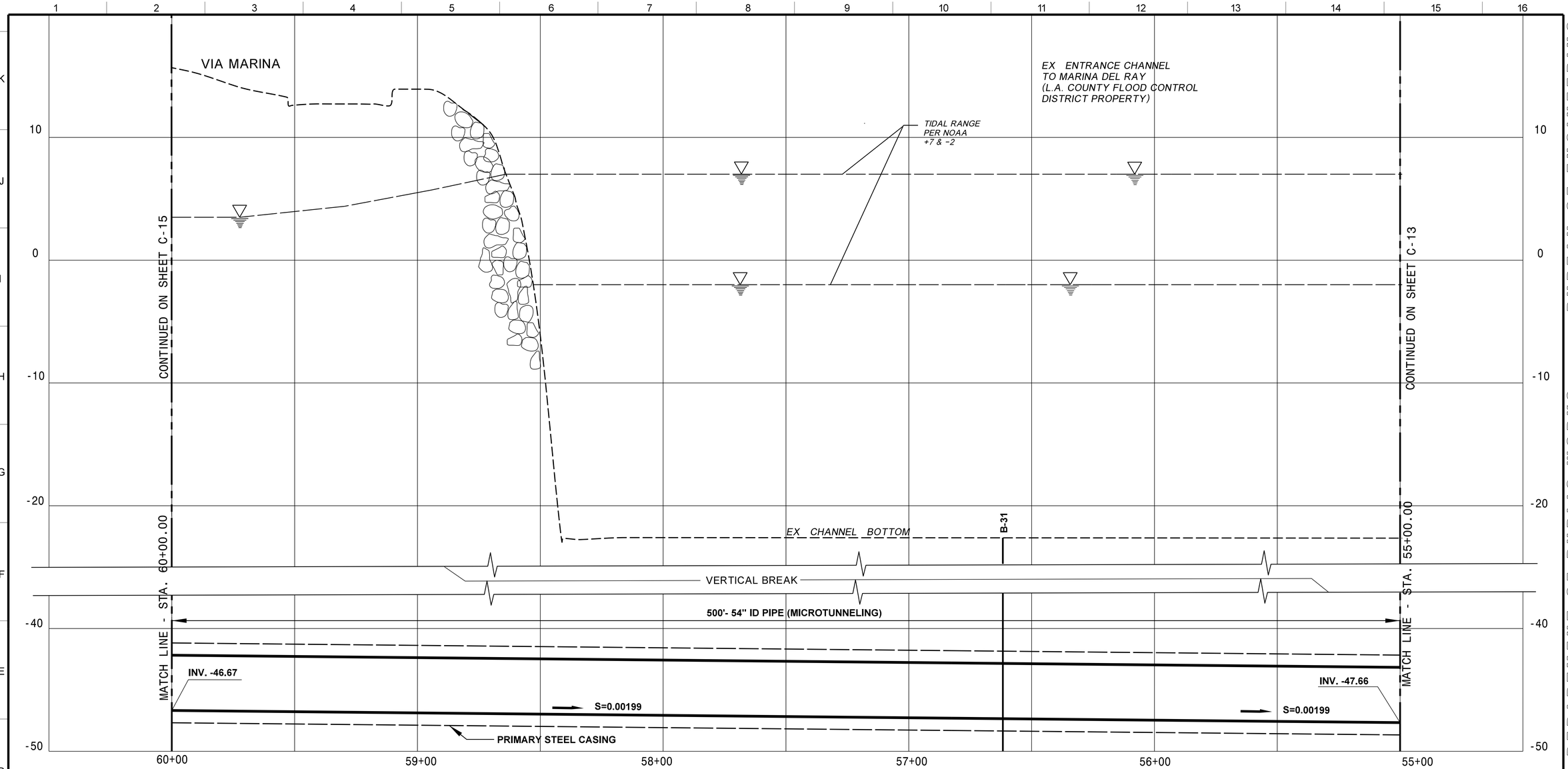


## PROFILE

SCALE:
HORIZ.: 1" = 20'
VERT.: 1" = 4'

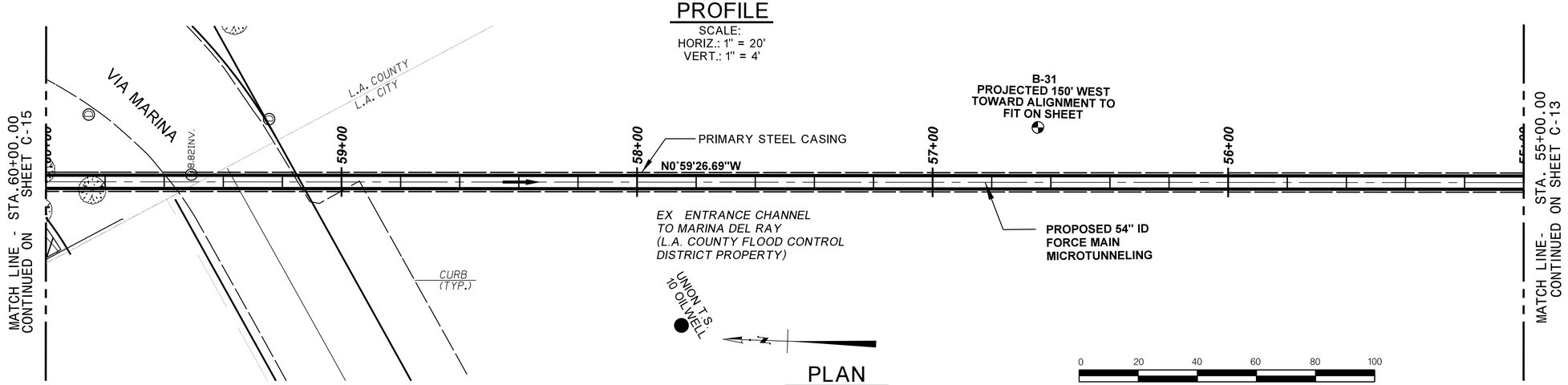


## PLAN

SCALE: 1" = 20'

REVISION DATES (DESIGN STAGE ONLY)

FILE: Q:\CAD DATA\SZCxxxxx\szc11631\civil\asbid\vdfmDc14.dgn
DATE: 09-Jul-14 09:34

CITY OF LOS ANGELES • DEPARTMENT OF PUBLIC WORKS • BUREAU OF ENGINEERING

LA DPW ENGINEERING TRANSFORMING LOS ANGELES

| NO. | REVISIONS | DATE | BY: |
|---|---|---|---|

CIP NO. AS-BID

INDEX NO.

| | | | |
|---|---|---|---|
| | CITY ENGINEER | | DATE |
| | GARY LEE MOORE, P.E. | | |
| | DESIGN GROUP | | |
| ENGINEER: | SEAN ZAHEDI/DARSHNA PATEL | LIC. NO. C-75974 | 07-14 |
| DESIGNED BY: | DARSHNA PATEL, CAN CHOW | | 07-14 |
| DRAWN BY: | CAN CHOW, HIEP LAM | | 07-14 |
| CHECKED BY: | ABID CHOWDHRY, P.E. | | 07-14 |
| APPROVED BY: | BRAD JENSON, P.E. | | 07-14 |

VERTICAL CONTROL: NGVD29, 1985 ADJ
HORIZONTAL CONTROL: NAD83, EPOCH 1991.5

SHEET TITLE: PLAN AND PROFILE (STA. 55+00 TO STA. 60+00)
PROJECT: VENICE DUAL FORCE MAIN
ADDRESS: MARINA DEL REY, CALIFORNIA

WORK ORDER NO. SZC11631

DRAWING NO. C-14

SHEET 20

NOT FOR CONSTRUCTION

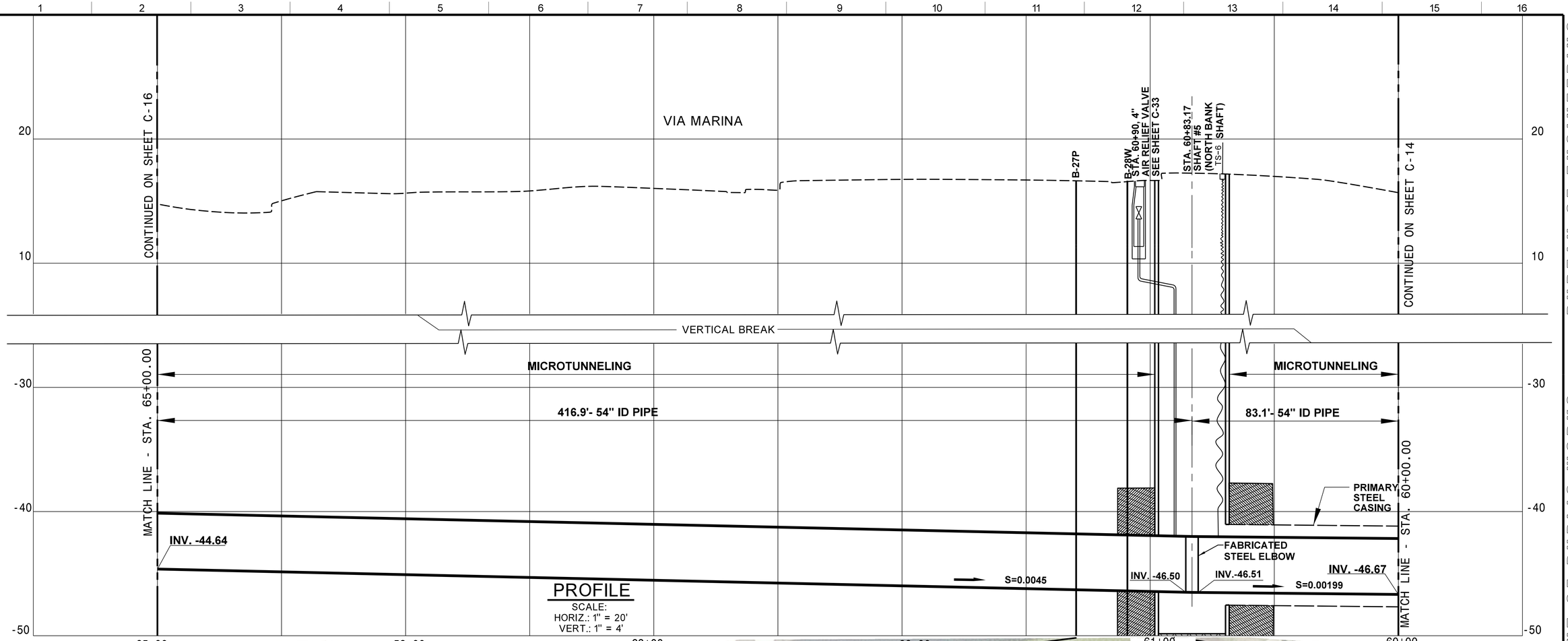


## PROFILE

SCALE:
HORIZ.: 1" = 20'
VERT.: 1" = 4'

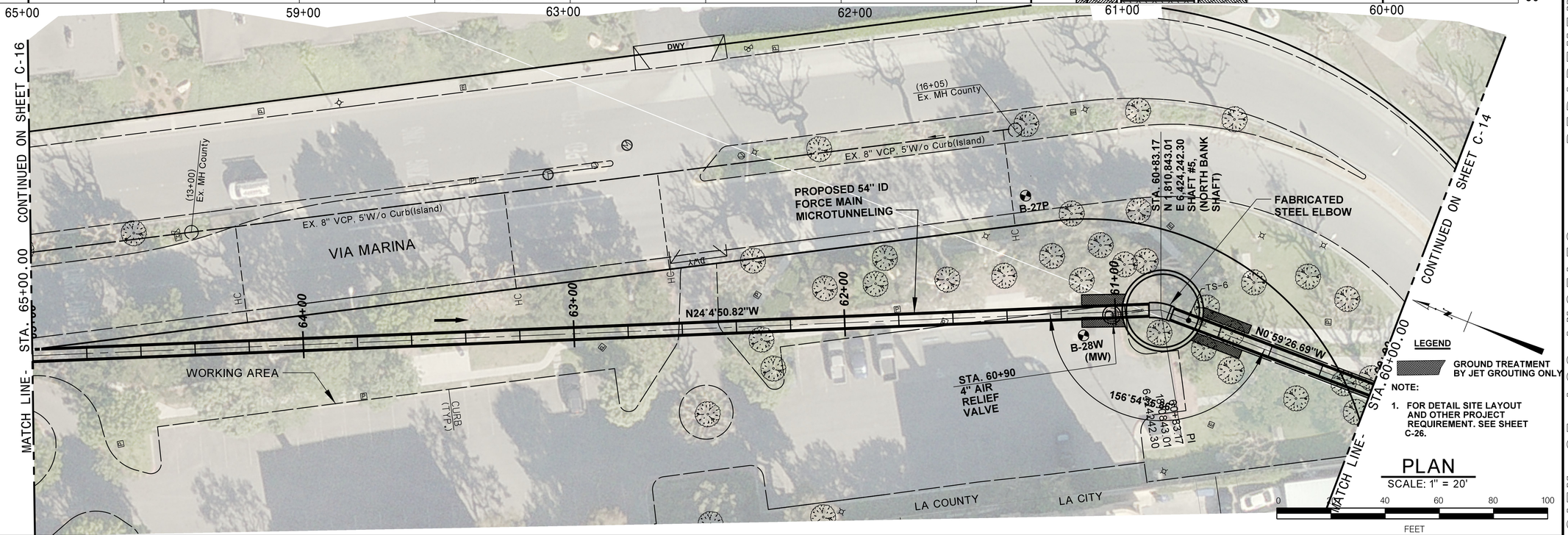


## PLAN

SCALE: 1" = 20'

NOT FOR CONSTRUCTION

CITY OF LOS ANGELES • DEPARTMENT OF PUBLIC WORKS • BUREAU OF ENGINEERING

LA DPW ENGINEERING TRANSFORMING LOS ANGELES

| NO. | REVISIONS | DATE | BY: |
|---|---|---|---|

CIP NO. AS-BID

INDEX NO.

| | | DATE |
|---|---|---|
| CITY ENGINEER | GARY LEE MOORE, P.E. | |
| DESIGN GROUP | | |
| ENGINEER: | SEAN ZAHEDI/DARSHNA PATEL LIC. NO. C-75974 | 07-14 |
| DESIGNED BY: | DARSHNA PATEL, CAN CHOW | 07-14 |
| DRAWN BY: | CAN CHOW, HIEP LAM | 07-14 |
| CHECKED BY: | ABID CHOWDHRY, P.E. | 07-14 |
| APPROVED BY: | BRAD JENSON, P.E. | 07-14 |

VERTICAL CONTROL: NGVD29, 1985 ADJ.
HORIZONTAL CONTROL: NAD83, EPOCH 1991.5

SHEET TITLE: PLAN AND PROFILE (STA. 60+00 TO STA. 65+00)

PROJECT: VENICE DUAL FORCE MAIN

ADDRESS: MARINA DEL REY, CALIFORNIA

WORK ORDER NO. SZC11631

DRAWING NO. C-15

SHEET 21

REVISION DATES (DESIGN STAGE ONLY)

FILE: G:\CAD DATA\SZCxxxxx\szc11631\civil\asbid\vdfmDc15.dgn
DATE: 09-Jul-14 09:36

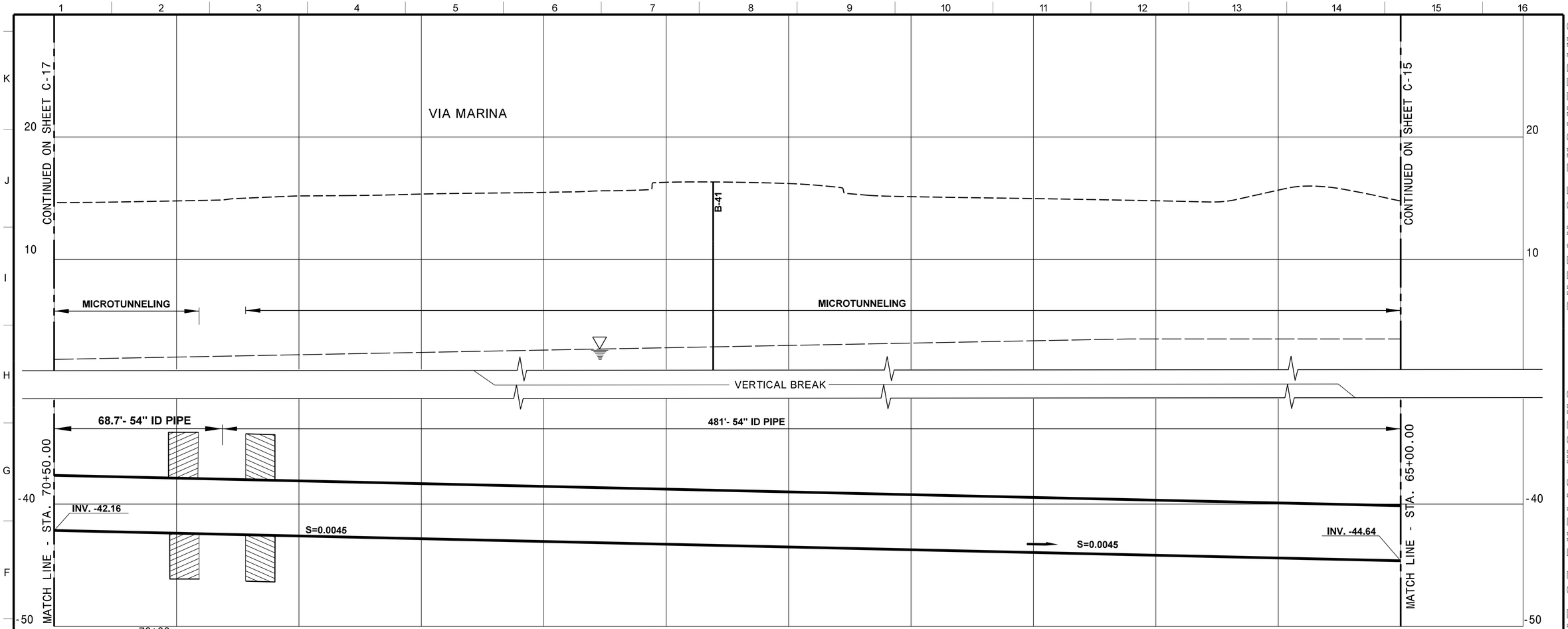


## PROFILE

SCALE:
HORIZ.: 1" = 20'
VERT.: 1" = 4'

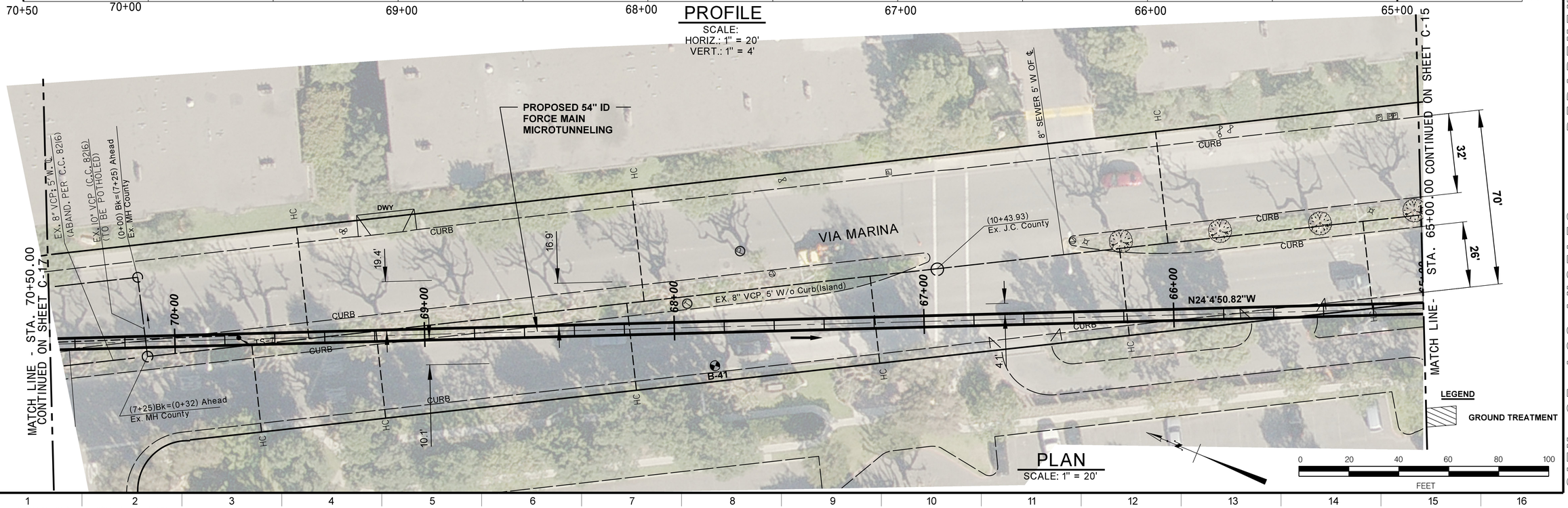


## PLAN

SCALE: 1" = 20'

REVISION DATES (DESIGN STAGE ONLY)

FILE: Q:\CAD DATA\SZCxxxxx\szc11631\civil\asbid\vdfmDc16.dgn
DATE: 09-Jul-14 09:37

CITY OF LOS ANGELES • DEPARTMENT OF PUBLIC WORKS • BUREAU OF ENGINEERING

LA DPW ENGINEERING TRANSFORMING LOS ANGELES

| NO. | REVISIONS | DATE | BY: |
|---|---|---|---|

CIP NO. AS-BID

INDEX NO.

| | | DATE |
|---|---|---|
| CITY ENGINEER | GARY LEE MOORE, P.E. | |
| DESIGN GROUP | | |
| ENGINEER: | SEAN ZAHEDI/DARSHNA PATEL LIC. NO. C-75974 | 07-14 |
| DESIGNED BY: | DARSHNA PATEL, CAN CHOW | 07-14 |
| DRAWN BY: | CAN CHOW, HIEP LAM | 07-14 |
| CHECKED BY: | ABID CHOWDHRY, P.E. | 07-14 |
| APPROVED BY: | BRAD JENSON, P.E. | 07-14 |

VERTICAL CONTROL: NGVD29, 1985 ADJ
HORIZONTAL CONTROL: NAD83, EPOCH 1991.5

SHEET TITLE: PLAN AND PROFILE (STA. 65+00 TO STA. 70+50)

PROJECT: VENICE DUAL FORCE MAIN

ADDRESS: MARINA DEL REY, CALIFORNIA

WORK ORDER NO. SZC11631

DRAWING NO. C-16

SHEET 22

NOT FOR CONSTRUCTION

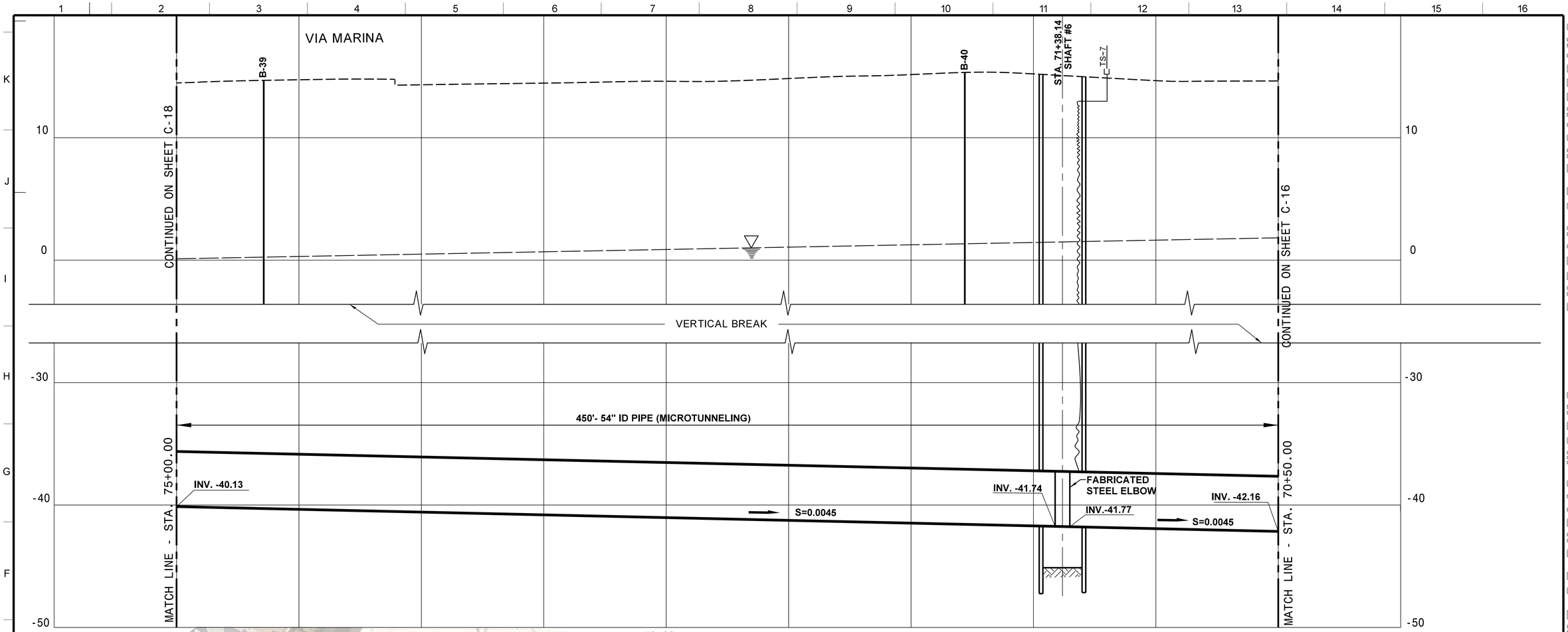


## PROFILE

SCALE:
HORIZ.: 1" = 20'
VERT.: 1" = 4'

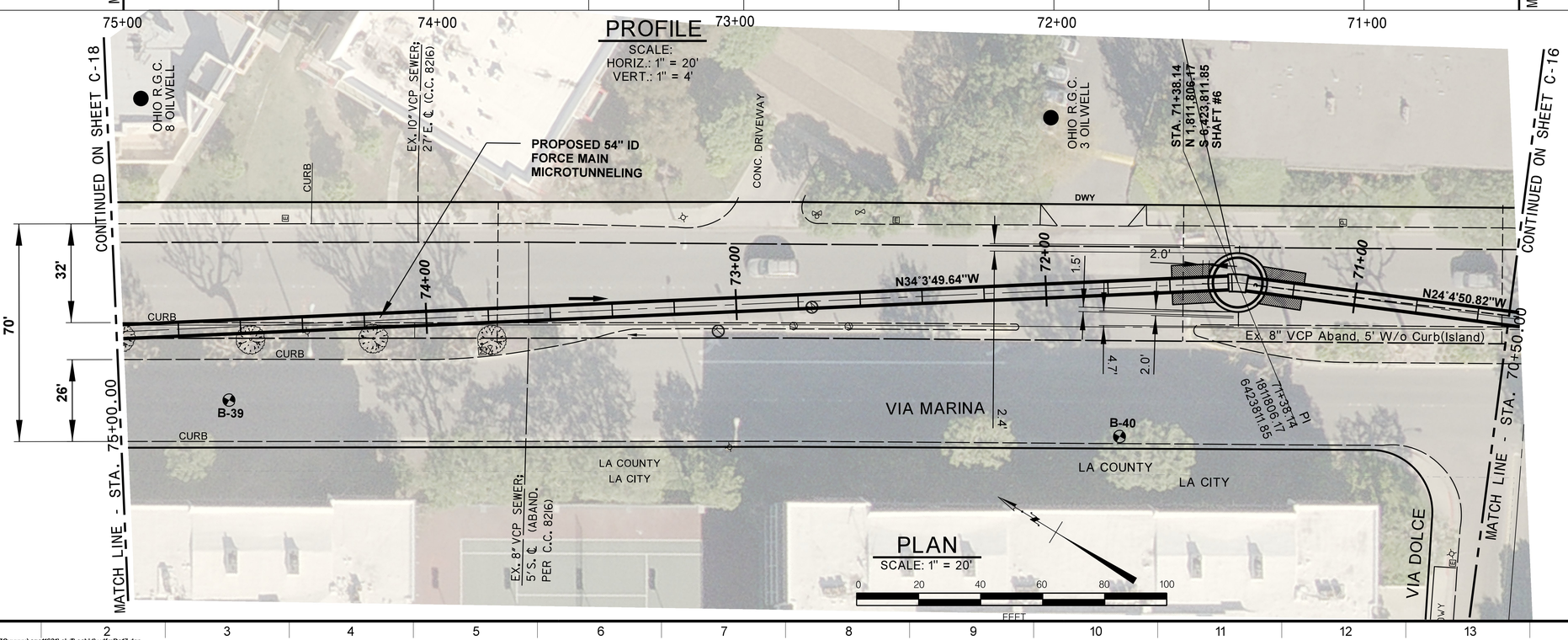


## PLAN

SCALE: 1" = 20'

0 20 40 60 80 100
FEET

REVISION DATES (DESIGN STAGE ONLY)

FILE: Q:\CAD DATA\SZCxxxxx\szc11631\civil\asbld\vdfmDc17.dgn
DATE: 09-Jul-14 09:39

CITY OF LOS ANGELES • DEPARTMENT OF PUBLIC WORKS • BUREAU OF ENGINEERING

LA DPW ENGINEERING TRANSFORMING LOS ANGELES

| NO. | REVISIONS | DATE | BY: |
|---|---|---|---|

CIP NO. AS-BID

INDEX NO.

| | | DATE |
|---|---|---|
| CITY ENGINEER | GARY LEE MOORE, P.E. | |
| DESIGN GROUP | | |
| ENGINEER: | SEAN ZAHEDI/DARSHNA PATEL LIC. NO. C-75974 | 07-14 |
| DESIGNED BY: | DARSHNA PATEL, CAN CHOW | 07-14 |
| DRAWN BY: | CAN CHOW, HIEP LAM | 07-14 |
| CHECKED BY: | ABID CHOWDHRY, P.E. | 07-14 |
| APPROVED BY: | BRAD JENSON, P.E. | 07-14 |

VERTICAL CONTROL: NGVD29, 1985 ADJ.
HORIZONTAL CONTROL: NAD83, EPOCH 1991.5

SHEET TITLE:
PLAN AND PROFILE (STA. 70+50 TO STA. 75+00)

PROJECT: VENICE DUAL FORCE MAIN

ADDRESS: MARINA DEL REY, CALIFORNIA

WORK ORDER NO.
SZC11631

DRAWING NO.
C-17

SHEET 23

NOT FOR CONSTRUCTION

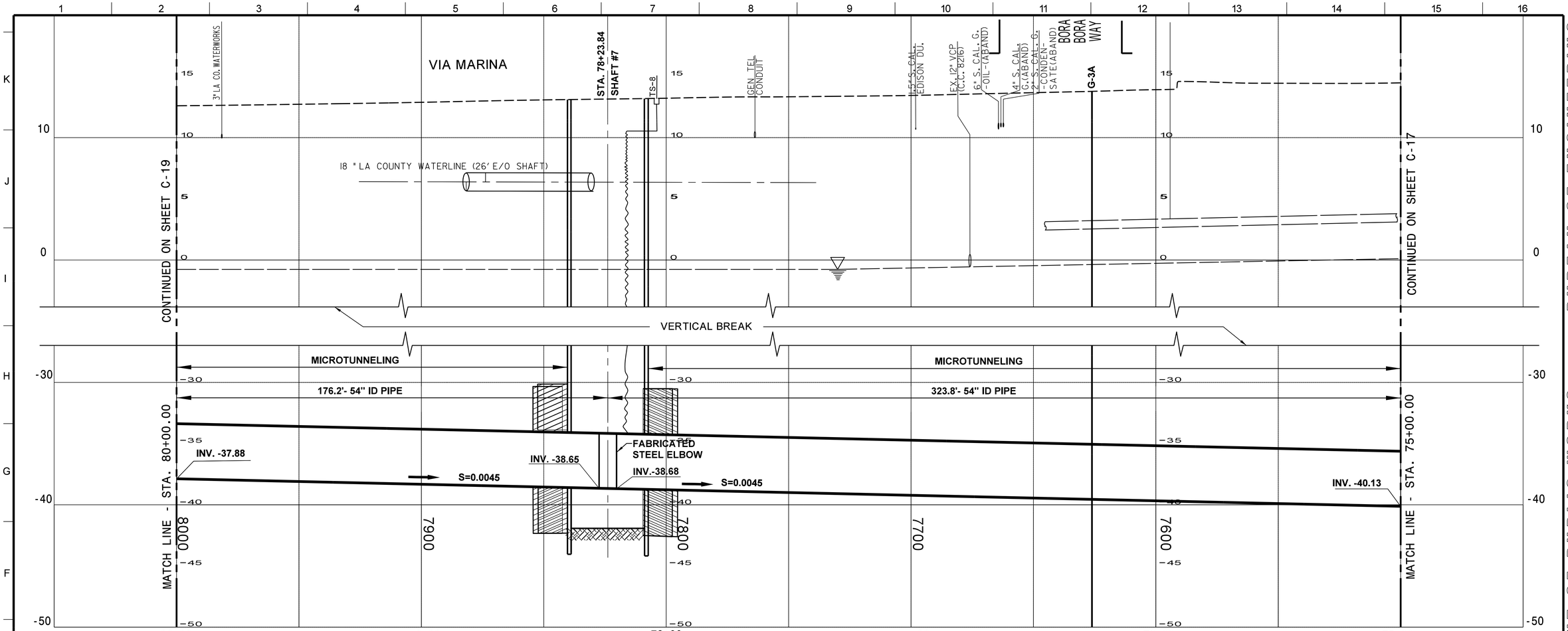


## PROFILE

SCALE:
HORIZ.: 1" = 20'
VERT.: 1" = 4'

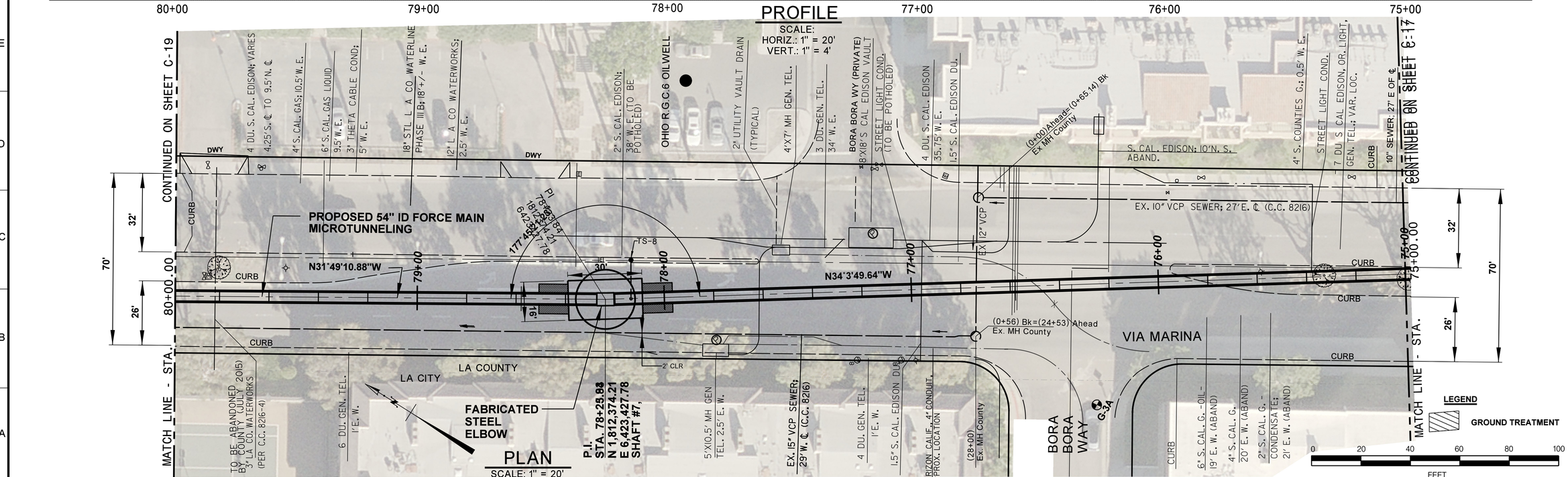


## PLAN

SCALE: 1" = 20'

LA DPW ENGINEERING TRANSFORMING LOS ANGELES

BUREAU OF ENGINEERING

| NO. | REVISIONS | DATE | BY |
|---|---|---|---|

CIP NO. AS-BID

NOT FOR CONSTRUCTION

CITY OF LOS ANGELES • DEPARTMENT OF PUBLIC WORKS

| | | | |
|---|---|---|---|
| CITY ENGINEER | | | DATE |
| ENGINEER: | DARSHNA PATEL, LIC. NO. C-76697 | | 03-14 |
| DESIGNED BY: | DARSHNA PATEL, CAN CHOW | | 03-14 |
| DRAWN BY: | CAN CHOW, HIEP LAM | | 03-14 |
| CHECKED BY: | ABID CHOWDHRY, P.E. | | 03-14 |
| APPROVED BY: | BRAD JENSON, P.E. | | 03-14 |

DESIGN GROUP

VERTICAL CONTROL: NGVD29, 1955 ADJ.
HORIZONTAL CONTROL: NAD83, EPOCH 1991.5

SHEET TITLE: PLAN AND PROFILE (STA. 75+00 TO STA. 80+00)

PROJECT: VENICE DUAL FORCE MAIN

ADDRESS: MARINA DEL REY, CALIFORNIA

WORK ORDER NO. SZC11631

DRAWING NO. C-18

SHEET 24

REVISION DATES (DESIGN STAGE ONLY)

FILE: Q:\CAD DATA\SZCxxxxx\szc11631\civil\asbid\vdfmDc18.dgn
DATE: 09-Jul-14 09:42

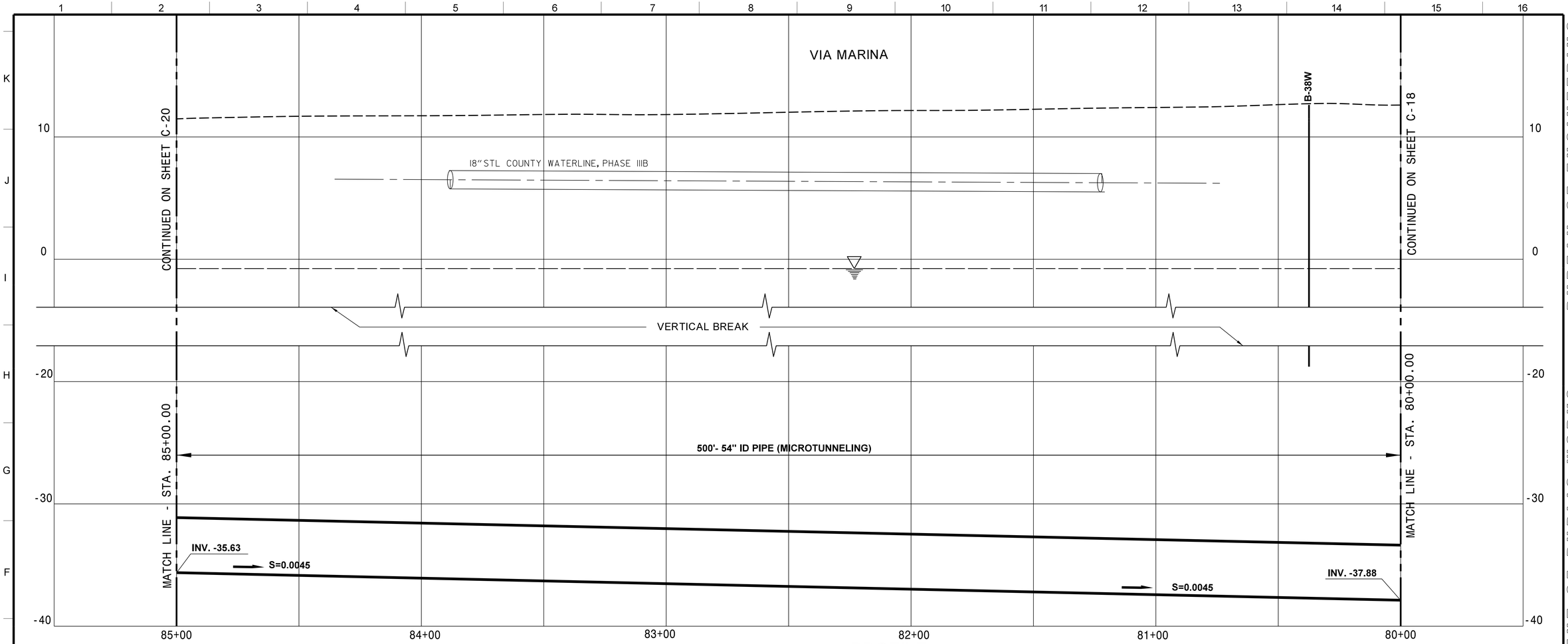


PROFILE

SCALE:
HORIZ.: 1" = 20'
VERT.: 1" = 4'

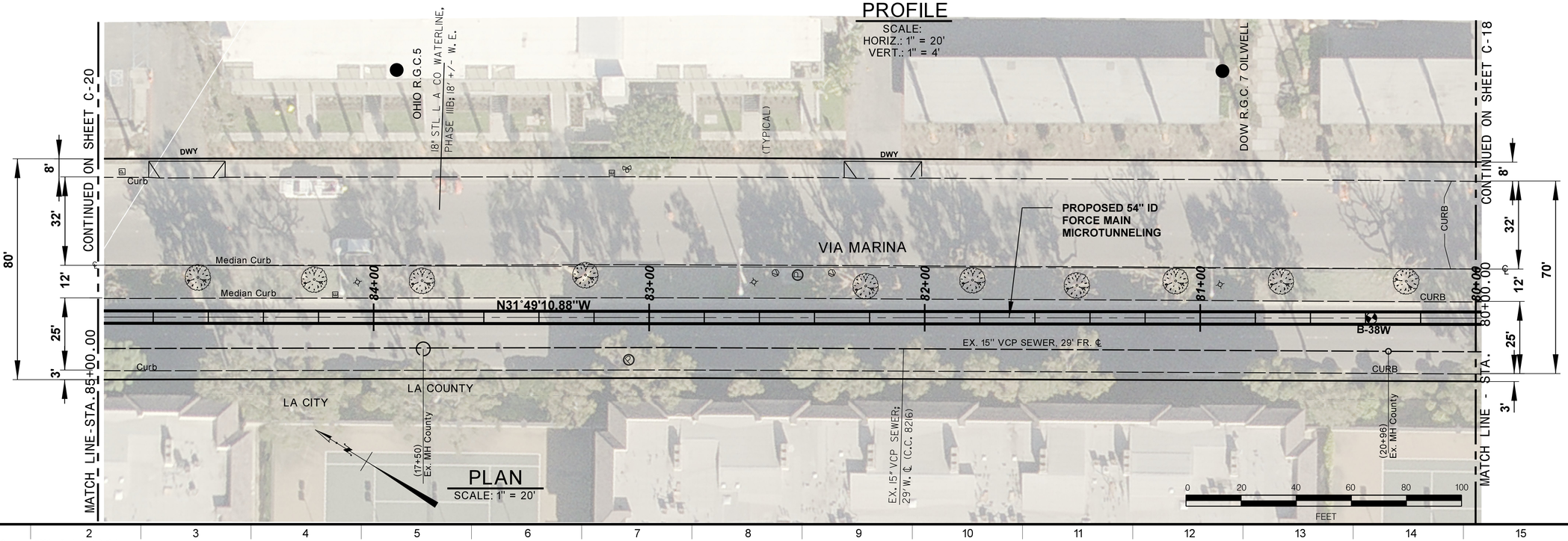


PLAN
SCALE: 1" = 20'

REVISION DATES (DESIGN STAGE ONLY)

FILE: Q:\CAD DATA\SZCxxxxx\szc11631\civil\asbid\vdfmDc19.dgn
DATE: 09-Jul-14 09:43

CITY OF LOS ANGELES • DEPARTMENT OF PUBLIC WORKS • BUREAU OF ENGINEERING

LA DPW ENGINEERING TRANSFORMING LOS ANGELES

REVISIONS

| NO. | DATE | BY: |
|---|---|---|
| | | |

CIP NO. AS-BID

INDEX NO.

| | | DATE |
|---|---|---|
| CITY ENGINEER | GARY LEE MOORE, P.E. | |
| DESIGN GROUP | | |
| ENGINEER: | SEAN ZAHEDI/DARSHNA PATEL, LIC. NO. C-75974 | 07-14 |
| DESIGNED BY: | DARSHNA PATEL, CAN CHOW | 07-14 |
| DRAWN BY: | CAN CHOW, HIEP LAM | 07-14 |
| CHECKED BY: | ABID CHOWDHRY, P.E. | 07-14 |
| APPROVED BY: | BRAD JENSON, P.E. | 07-14 |

VERTICAL CONTROL: NGVD29, 1985 ADJ
HORIZONTAL CONTROL: NAD83, EPOCH 1991.5

SHEET TITLE: PLAN AND PROFILE (STA. 80+00 TO STA. 85+00)

PROJECT: VENICE DUAL FORCE MAIN

ADDRESS: MARINA DEL REY, CALIFORNIA

WORK ORDER NO. SZC11631

DRAWING NO. C-19

SHEET 25

NOT FOR CONSTRUCTION

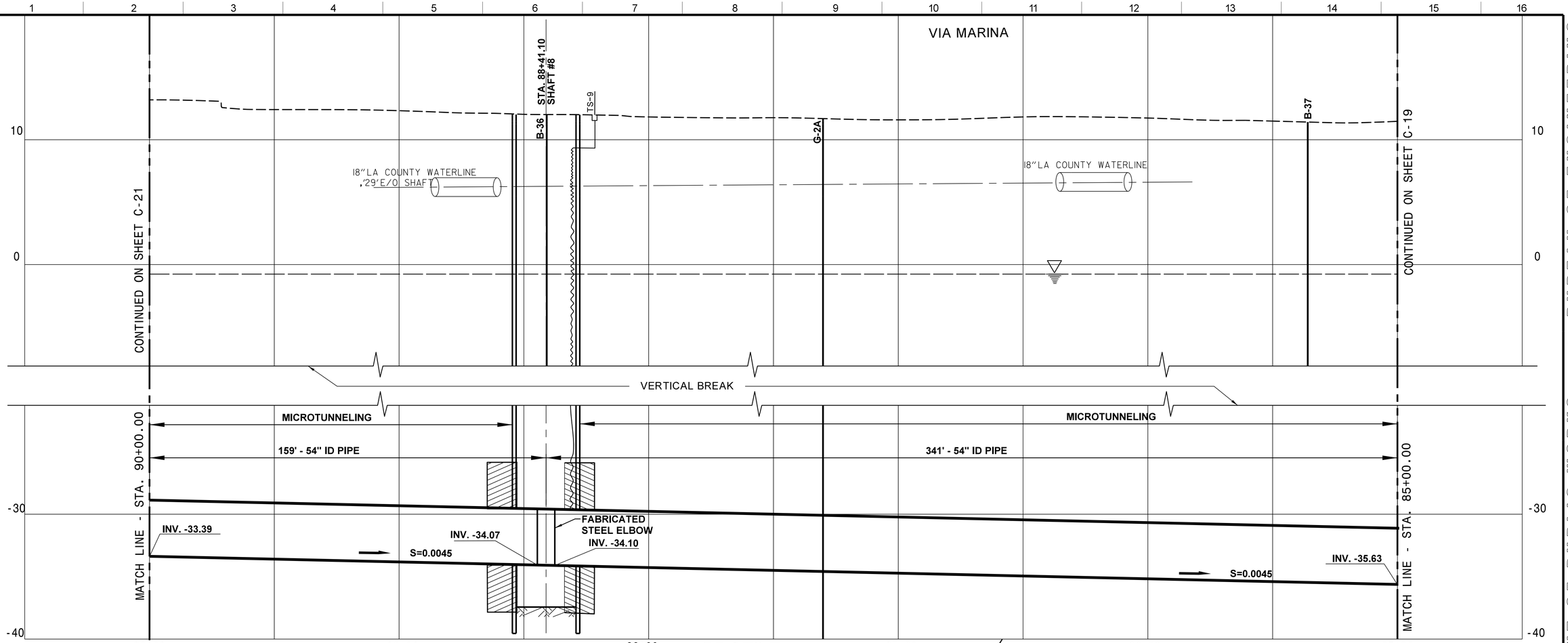


## PROFILE

SCALE:
HORIZ.: 1" = 20'
VERT.: 1" = 4'

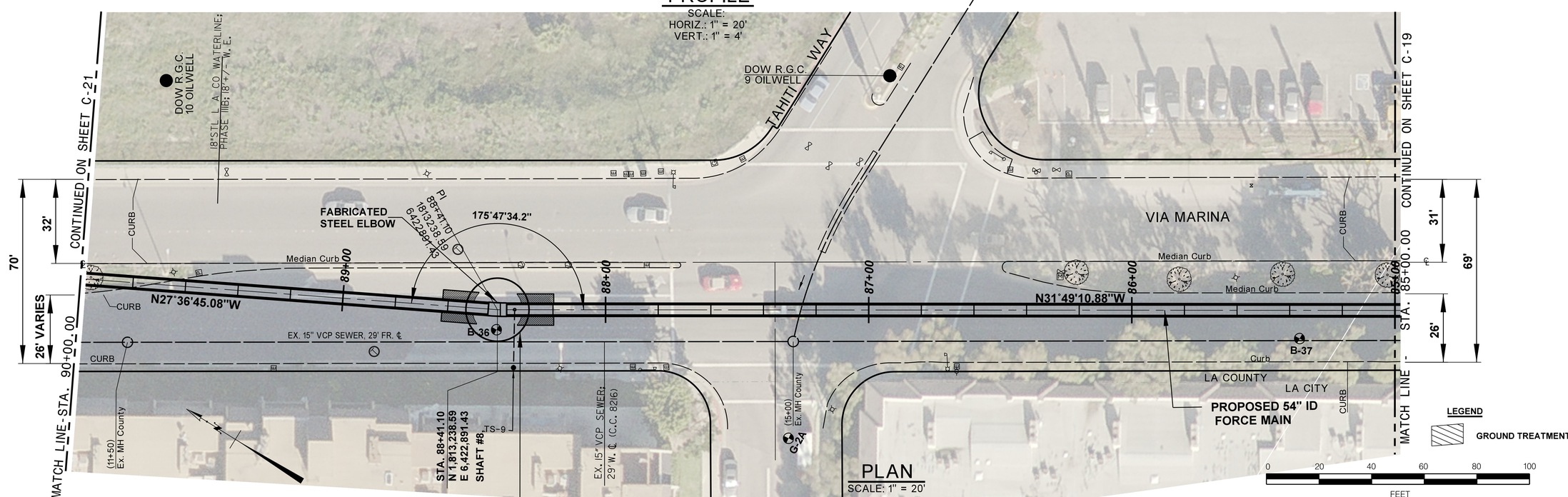


## PLAN

SCALE: 1" = 20'

REVISION DATES (DESIGN STAGE ONLY)

CITY OF LOS ANGELES • DEPARTMENT OF PUBLIC WORKS • BUREAU OF ENGINEERING

LA DPW ENGINEERING TRANSFORMING LOS ANGELES

| NO. | REVISIONS | DATE | BY: |
|---|---|---|---|

CIP NO. AS-BID

INDEX NO.

| | | DATE |
|---|---|---|
| CITY ENGINEER | GARY LEE MOORE, P.E. | |
| LIC. NO. | C-75974 | 07-14 |
| DESIGN GROUP | | |
| ENGINEER: | SEAN ZAHEDI/DARSHNA PATEL | 07-14 |
| DESIGNED BY: | DARSHNA PATEL, CAN CHOW | 07-14 |
| DRAWN BY: | CAN CHOW, HIEP LAM | 07-14 |
| CHECKED BY: | ABID CHOWDHRY, P.E. | 07-14 |
| APPROVED BY: | BRAD JENSON, P.E. | |

VERTICAL CONTROL: NGVD29, 1955 ADJ.
HORIZONTAL CONTROL: NAD83, EPOCH:1991.5

SHEET TITLE: PLAN AND PROFILE (STA. 85+00 TO STA. 90+00)

PROJECT: VENICE DUAL FORCE MAIN

ADDRESS: MARINA DEL REY, CALIFORNIA

WORK ORDER NO. SZC11631

DRAWING NO. C-20

SHEET 26

NOT FOR CONSTRUCTION

FILE: Q:\CAD DATA\SZCxxxxx\szc11631\civil\asbid\vdfmDc20.dgn
DATE: 09-Jul-14 09:45

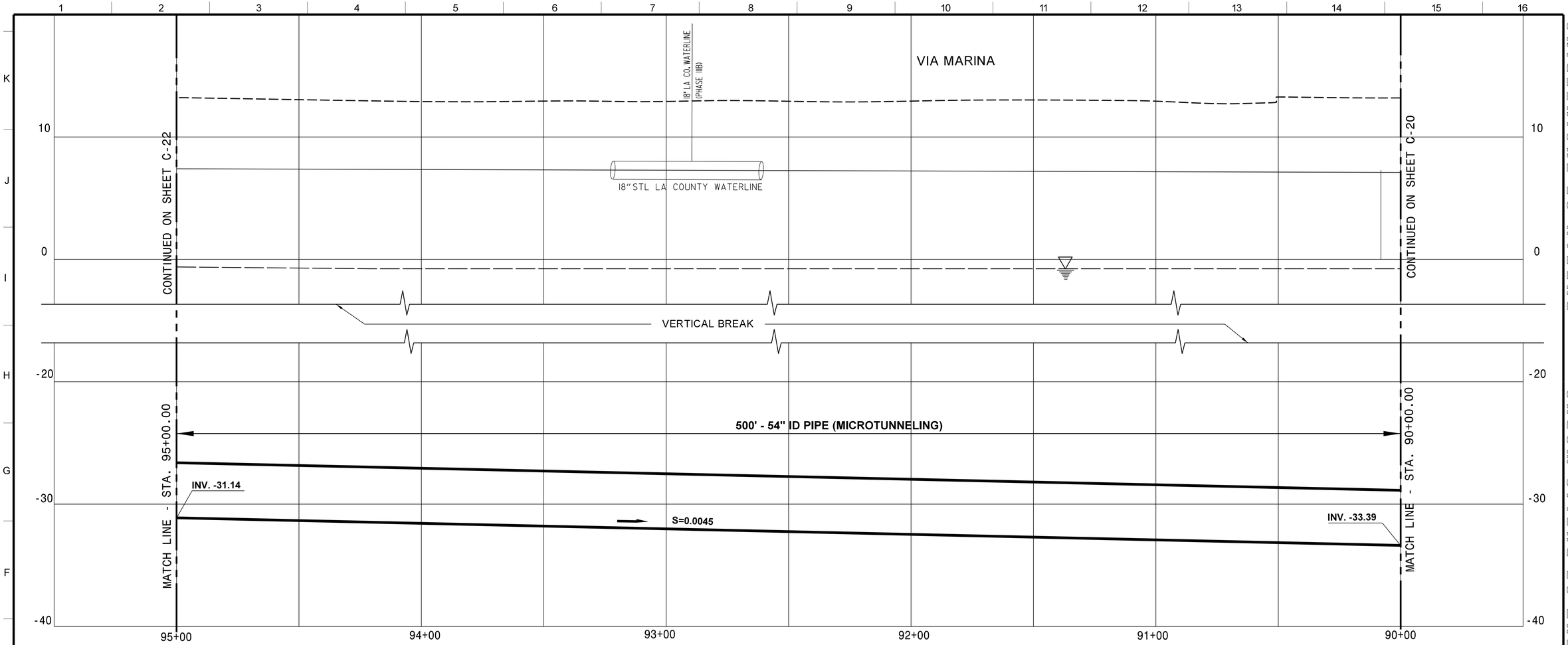


## PROFILE

SCALE:
HORIZ.: 1" = 20'
VERT.: 1" = 4'

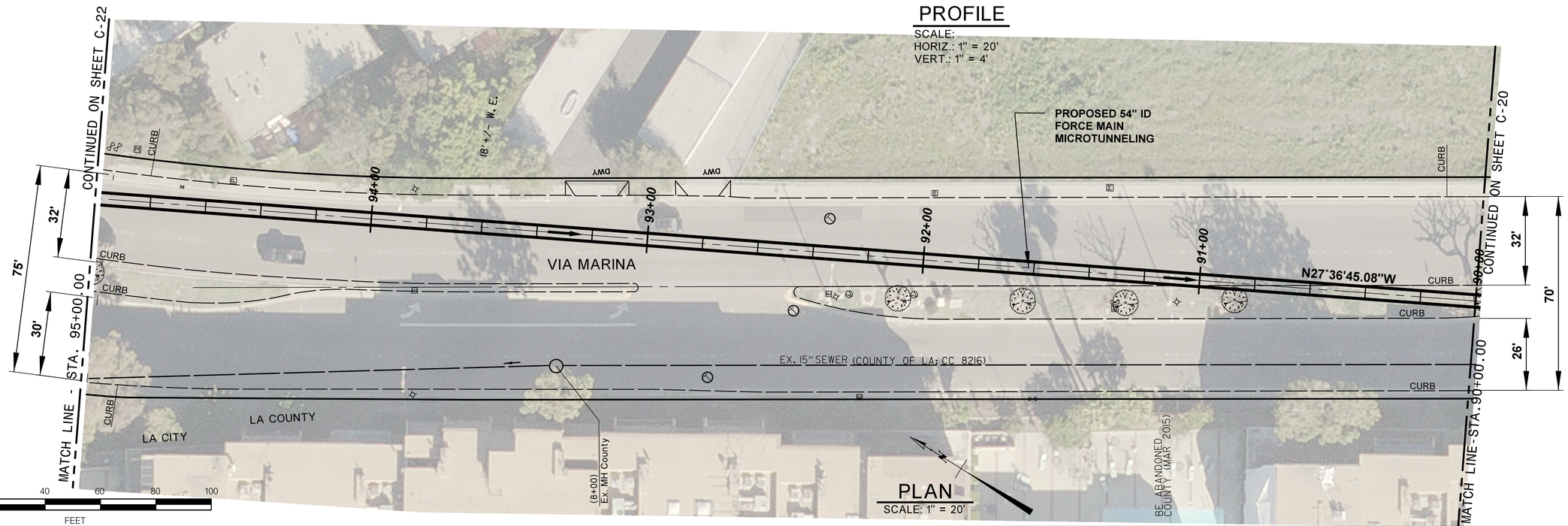


## PLAN

SCALE: 1" = 20'

REVISION DATES (DESIGN STAGE ONLY)

CITY OF LOS ANGELES • DEPARTMENT OF PUBLIC WORKS • BUREAU OF ENGINEERING

LA DPW ENGINEERING TRANSFORMING LOS ANGELES

| NO. | REVISIONS | DATE | BY: |
|---|---|---|---|

CIP NO. AS-BID

INDEX NO.

| | | DATE |
|---|---|---|
| CITY ENGINEER | GARY LEE MOORE, P.E. | |
| DESIGN GROUP | | |
| ENGINEER: | SEAN ZAHEDI/DARSHNA PATEL LIC. NO. C-75974 | 07-14 |
| DESIGNED BY: | DARSHNA PATEL, CAN CHOW | 07-14 |
| DRAWN BY: | CAN CHOW, HIEP LAM | 07-14 |
| CHECKED BY: | ABID CHOWDHRY, P.E. | 07-14 |
| APPROVED BY: | BRAD JENSON, P.E. | 07-14 |

VERTICAL CONTROL: NGVD29, 1995 ADJ.
HORIZONTAL CONTROL: NAD83, EPOCH 1991.5

SHEET TITLE: PLAN AND PROFILE (STA. 90+00 TO STA. 95+00)
PROJECT: VENICE DUAL FORCE MAIN
ADDRESS: MARINA DEL REY, CALIFORNIA

WORK ORDER NO. SZC11631
DRAWING NO. C-21
SHEET 27

NOT FOR CONSTRUCTION

FILE: Q:\CAD DATA\SZCxxxxx\szc11631\civil\asbid\vdfmDc21.dgn
DATE: 09-Jul-14 09:47

NOTES:

1. THE CONTRACTOR SHALL RELOCATE EXISTING 10" WATER LINE AS INDICATED ON DETAIL DRAWING C-46. 10" WATER LINE IS OWNED BY THE LOS ANGELES (LA) COUNTY.
2. THE CONTRACTOR SHALL CONTACT THE RESPECTIVE LOS ANGELES COUNTY WATERWORKS DISTRICT TO COORDINATE 10" WATER RELOCATION WORK.
3. THE CONTRACTOR SHALL, AT THE DIRECTION OF THE LA COUNTY, ISOLATE 10" WATER CONDUIT TO MINIMIZE WATER LEAKS WHEN CUTTING PIPE FOR RELOCATION.
4. WATER LINE SHALL BE RELOCATED AROUND CONTRACTOR'S PROPOSED MICROTUNNELING SHAFT (AS SHOWN ON DETAIL DRAWING C-46), OR SUBMIT ITS PROPOSED RELOCATION FOR REVIEW AND APPROVAL OF THE ENGINEER AND THE LA COUNTY WATERWORKS DISTRICT.
5. THE CONTRACTOR SHALL CONFIRM EXISTING 10" WATER LINE MATERIAL AND INSTALL LIKE FITTINGS APPROPRIATE FOR CONNECTION TO EXISTING CONDUIT.
6. PROPOSED 10" WATER LINE SHALL BE EXCAVATED AT SAME DEPTH OF EXISTING CONDUIT. TRENCH EXCAVATION SHALL BE BACKFILLED WITH CONTROLLED LOW STRENGTH MATERIAL (CLSM) OR AS APPROVED BY THE LA COUNTY WATERWORKS DISTRICT.
7. TRENCH SHALL BE PAVED AS REQUIRED BY THE LA COUNTY WATERWORKS DISTRICT.
8. THE CONTRACTOR SHALL SUBMIT ITS PROPOSED TRAFFIC MANAGEMENT CONTROL PLAN FOR WATER RELOCATION TO THE ENGINEER AND LA COUNTY FOR REVIEW AND APPROVAL.
9. THE CONTRACTOR SHALL BE RESPONSIBLE FOR RESTORING THE 10" WATER LINE ONCE THE CONSTRUCTION OF VDFM IS COMPLETED.

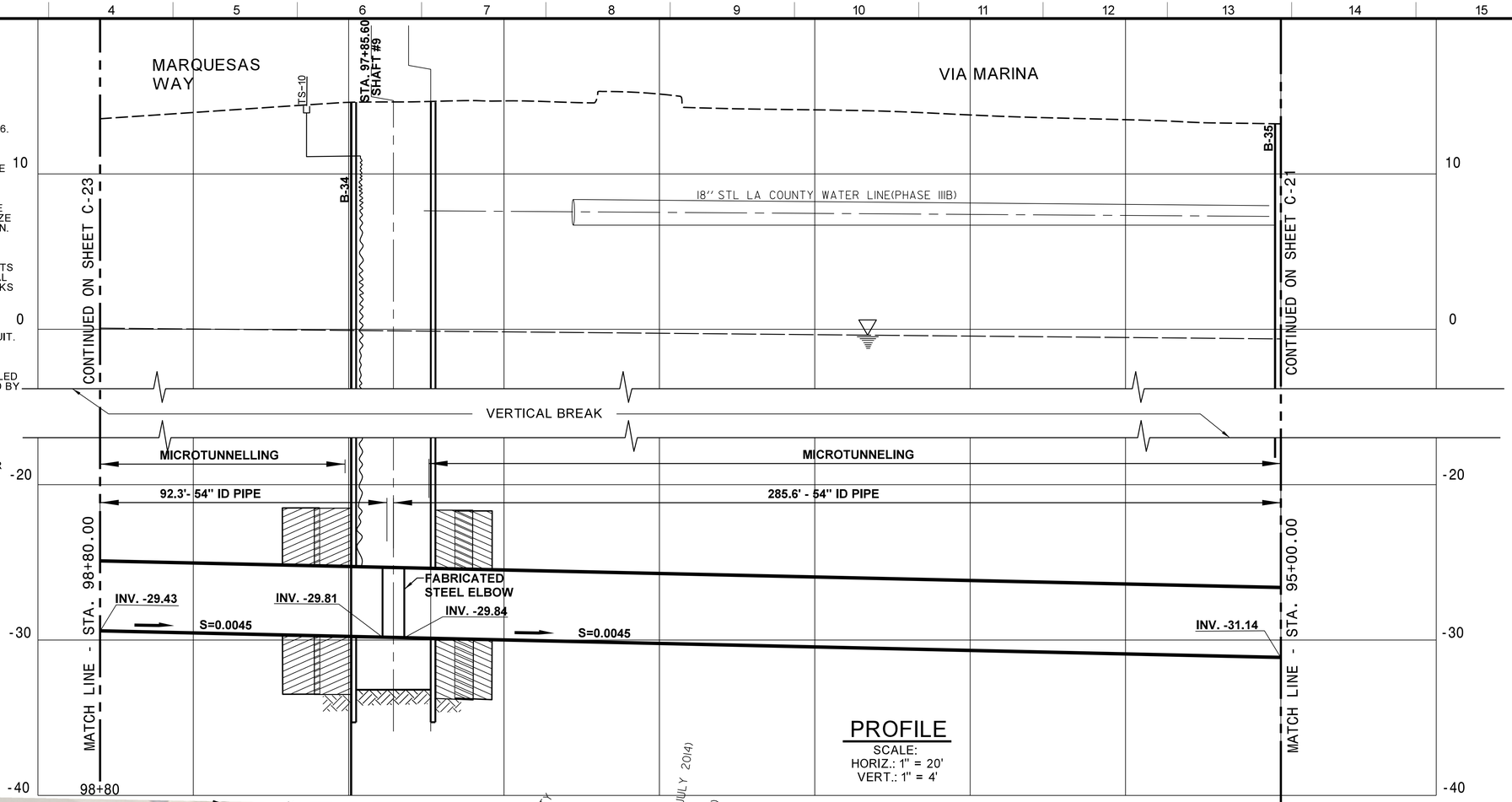


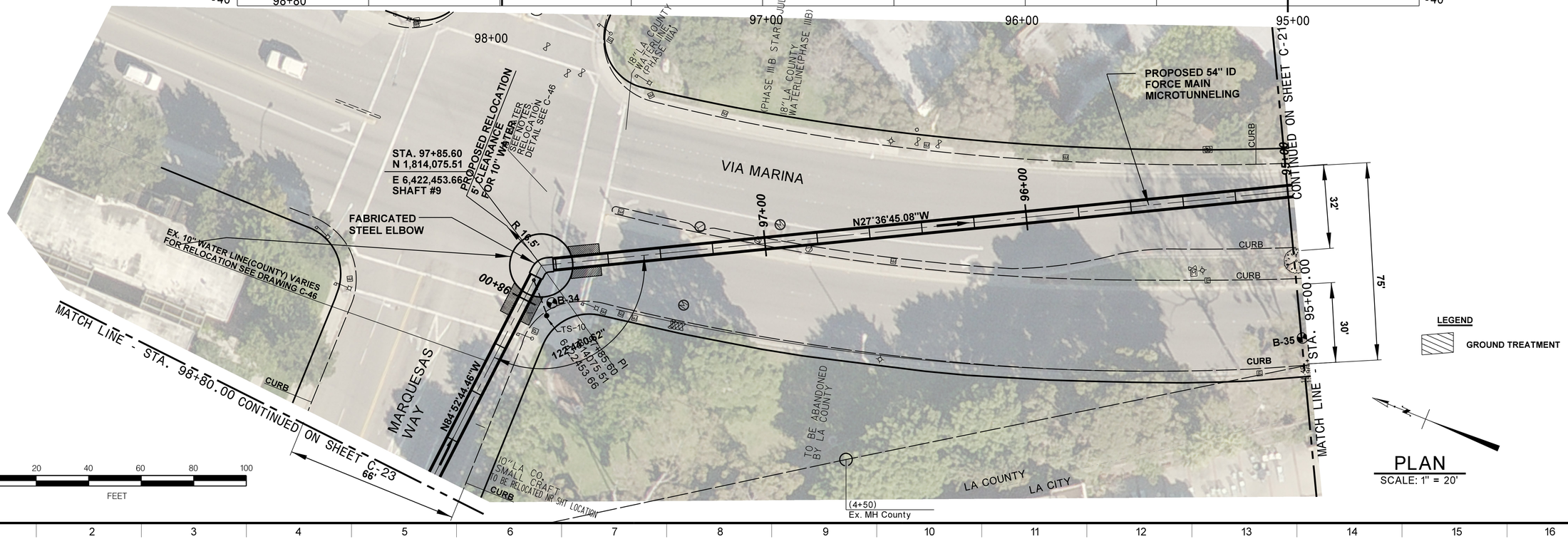


LEGEND

GROUND TREATMENT

PLAN
SCALE: 1" = 20'

CITY OF LOS ANGELES • DEPARTMENT OF PUBLIC WORKS • BUREAU OF ENGINEERING

LA DPW ENGINEERING TRANSFORMING LOS ANGELES

| NO. | REVISIONS | DATE | BY: |
|---|---|---|---|

CIP NO. AS-BID

INDEX NO.

GARY LEE MOORE, P.E. — CITY ENGINEER

| DESIGN GROUP | | DATE |
|---|---|---|
| ENGINEER: SEAN ZAHEDI/DARSHNA PATEL | LIC. NO. C-75974 | 07-14 |
| DESIGNED BY: DARSHNA PATEL | | 07-14 |
| DRAWN BY: CAN CHOW, HIEP LAM | | 07-14 |
| CHECKED BY: ABID CHOWDHRY, P.E. | | 07-14 |
| APPROVED BY: BRAD JENSON, P.E. | | 07-14 |

VERTICAL CONTROL: NGVD29, 1955 ADJ
HORIZONTAL CONTROL: NAD83, EPOCH 1991.5

SHEET TITLE: PLAN AND PROFILE (STA. 95+00 TO STA. 98+80)

PROJECT: VENICE DUAL FORCE MAIN

ADDRESS: MARINA DEL REY, CALIFORNIA

WORK ORDER NO. SZC11631

DRAWING NO. C-22

SHEET 28

NOT FOR CONSTRUCTION

REVISION DATES (DESIGN STAGE ONLY)

FILE: Q:\CAD DATA\SZCxxxxx\szc11631\civil\asbid\vdfmDc22.dgn
DATE: 18-Sep-14 13:49

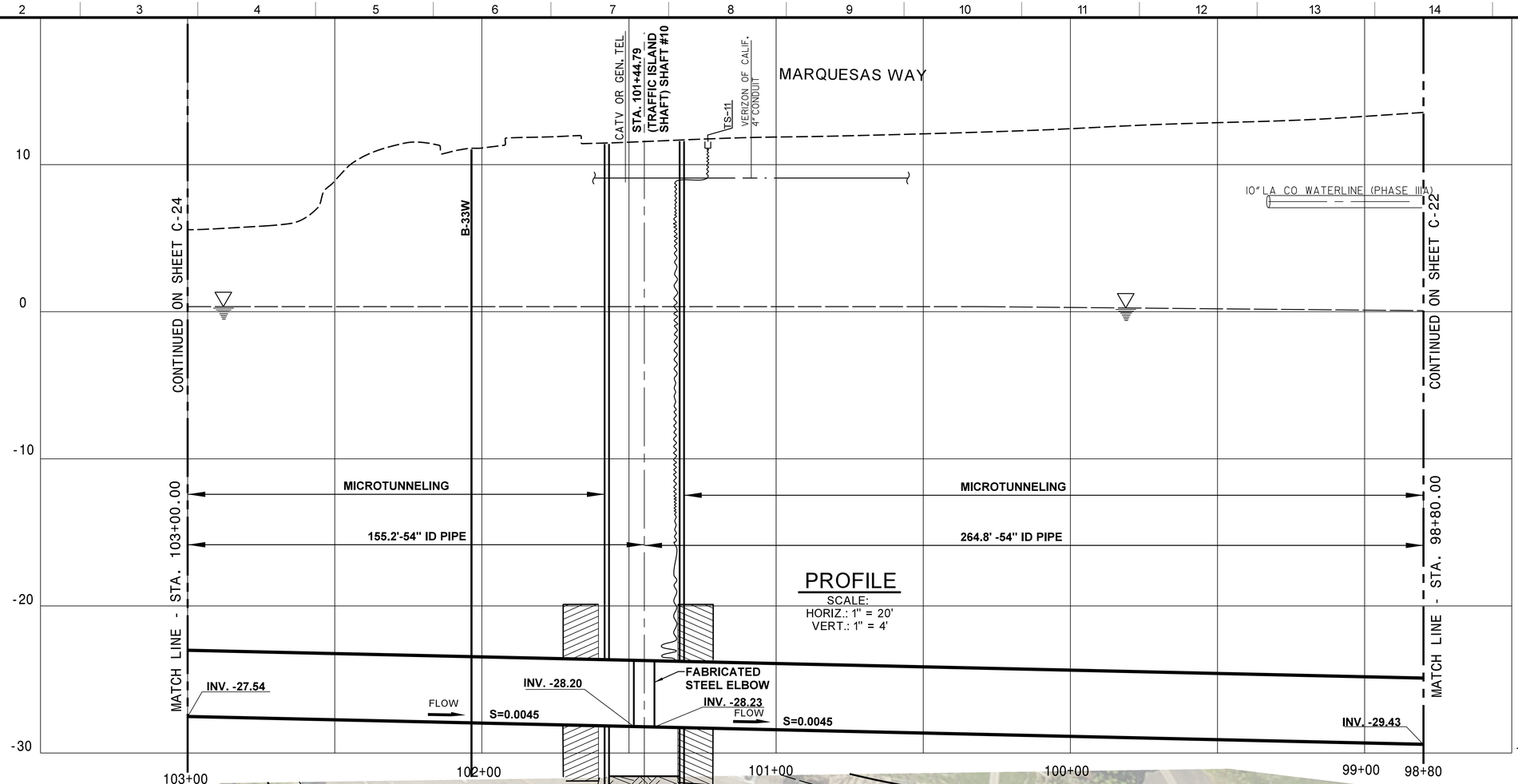


## PROFILE

SCALE:
HORIZ.: 1" = 20'
VERT.: 1" = 4'

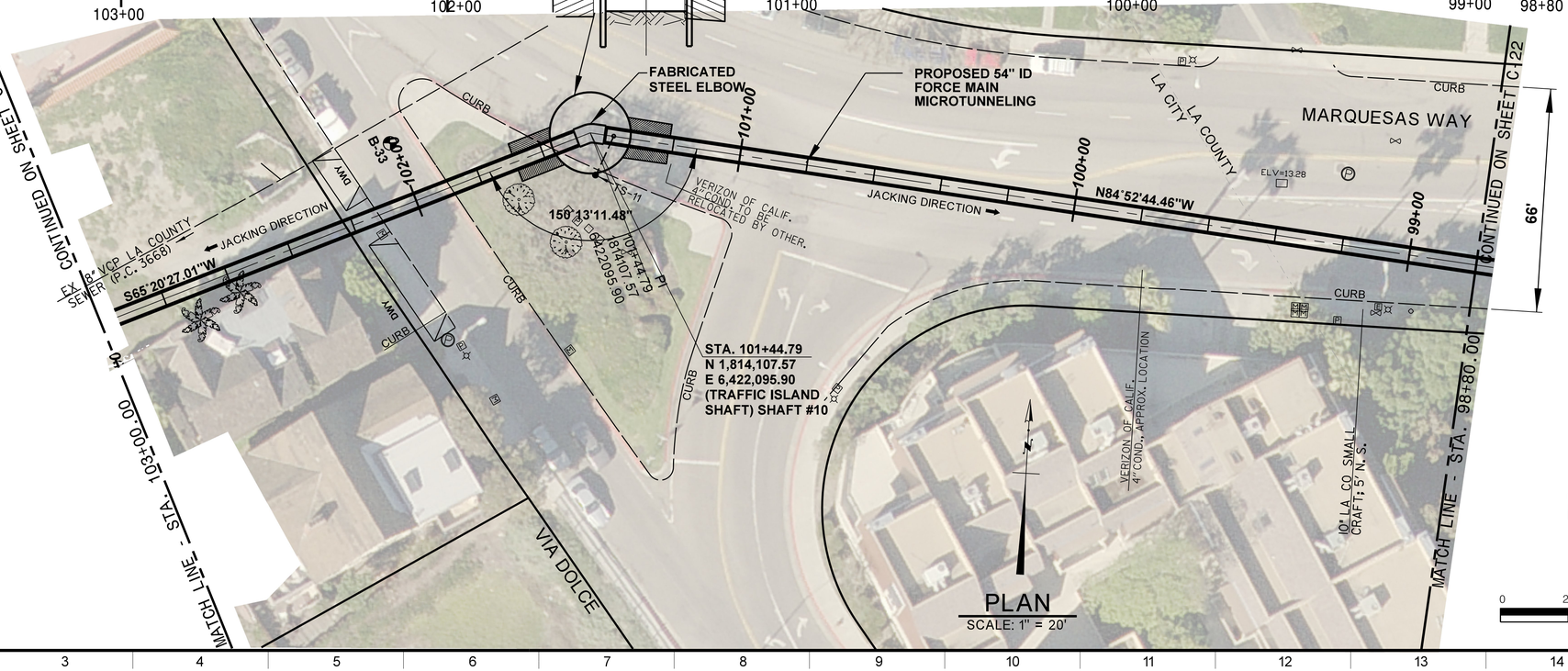


## PLAN

SCALE: 1" = 20'

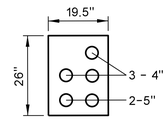


## DUCT BANK DETAIL

NOT TO SCALE

**NOTE:**

1. FOR DETAIL SITE LAYOUT AND OTHER PROJECT REQUIREMENT SEE SHEET C-25.

**LEGEND**

- GROUND TREATMENT
- FLOW ARROW
- ANTICIPATED JACKING DIRECTION

0 20 40 60 80 100
FEET

NOT FOR CONSTRUCTION

LA DPW ENGINEERING TRANSFORMING LOS ANGELES

CIP NO. AS-BID

INDEX NO.

| NO. | REVISIONS | DATE | BY: |
|---|---|---|---|

CITY OF LOS ANGELES • DEPARTMENT OF PUBLIC WORKS • BUREAU OF ENGINEERING

GARY LEE MOORE, P.E. CITY ENGINEER

| DESIGN GROUP | | DATE |
|---|---|---|
| ENGINEER: | SEAN ZAHEDI/DARSHNA PATEL LIC. NO. C-75974 | 07-14 |
| DESIGNED BY: | DARSHNA PATEL, CAN CHOW | 07-14 |
| DRAWN BY: | CAN CHOW, HIEP LAM | 07-14 |
| CHECKED BY: | ABID CHOWDHRY, P.E. | 07-14 |
| APPROVED BY: | BRAD JENSON, P.E. | 07-14 |

VERTICAL CONTROL: NGVD29, 1985 ADJ
HORIZONTAL CONTROL: NAD83, EPOCH 1991.5

SHEET TITLE: PLAN AND PROFILE (STA. 98+80 TO STA. 103+00)

PROJECT: VENICE DUAL FORCE MAIN

ADDRESS: MARINA DEL REY, CALIFORNIA

WORK ORDER NO. SZC11631

DRAWING NO. C-23

SHEET 29

REVISION DATES (DESIGN STAGE ONLY)

FILE: O:\CAD DATA\SZCxxxxx\szc11631\civil\asbid\vdfmDc23.dgn
DATE: 09-Jul-14 09:50

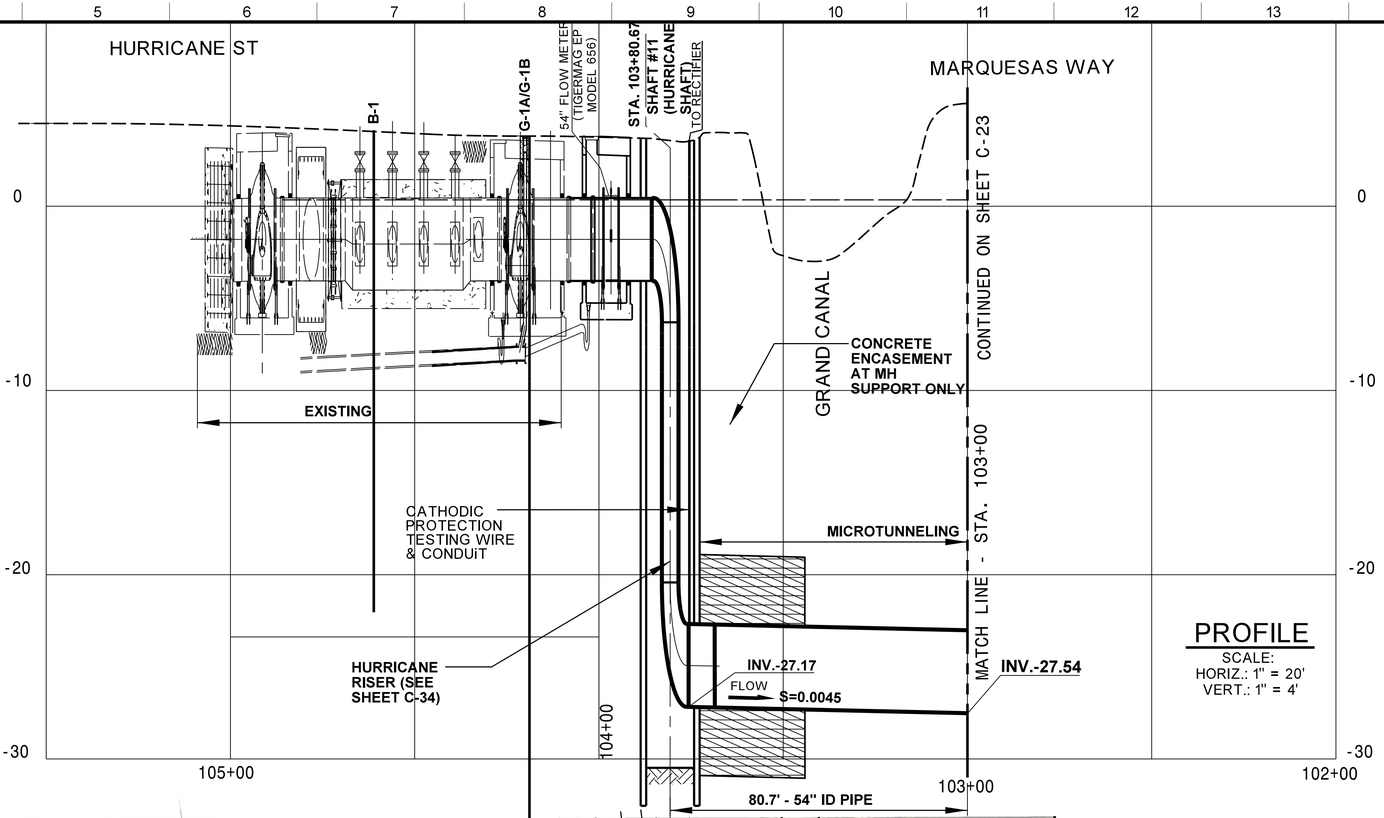


## PROFILE

SCALE:
HORIZ.: 1" = 20'
VERT.: 1" = 4'

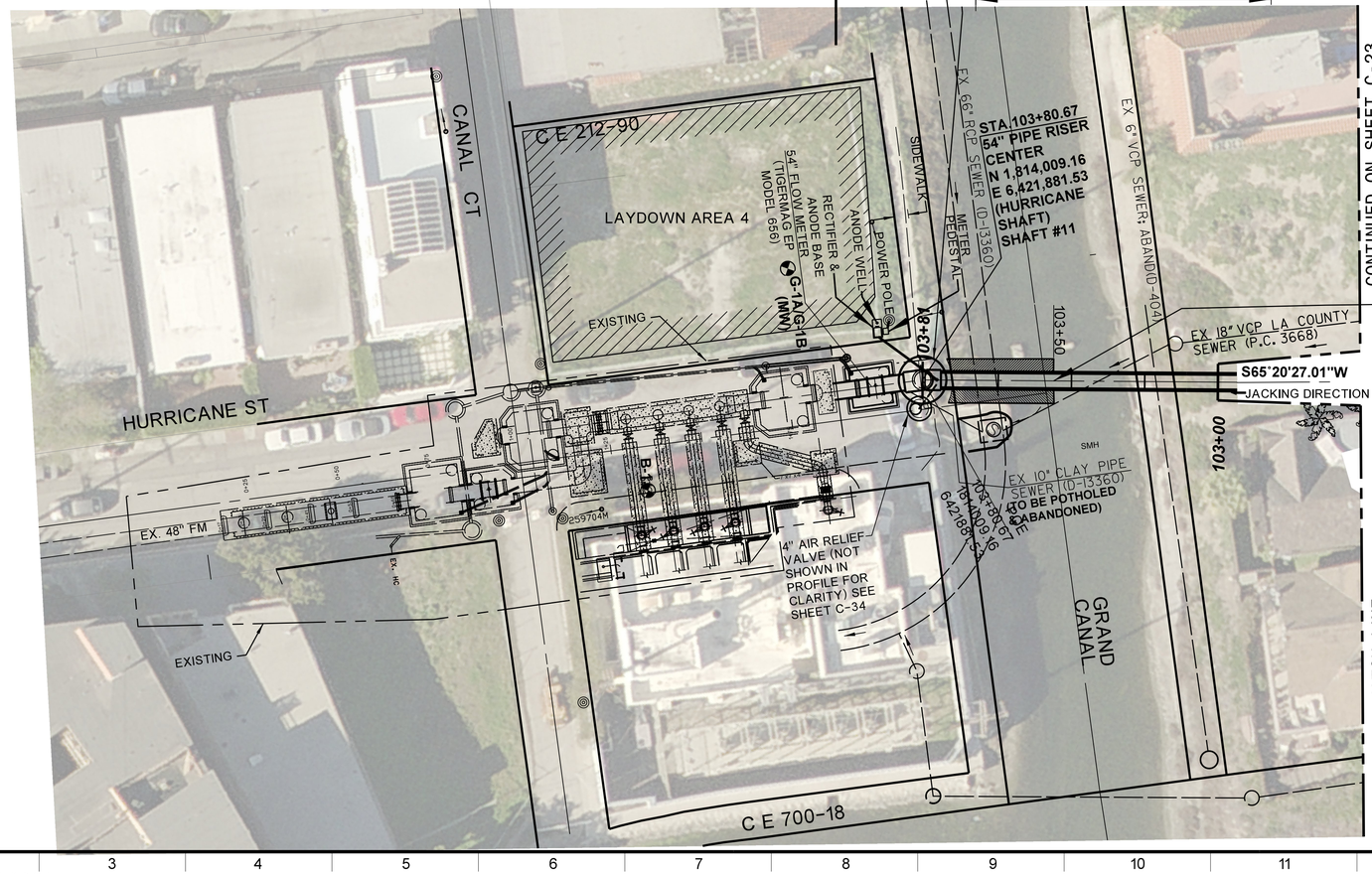


## PLAN

SCALE: 1" = 20'

**LEGEND**

GROUND TREATMENT

NOTES:

1. THE FINAL METER PEDESTAL LOCATION NEEDS TO BE APPROVED BY LADWP'S SERVICE PLANNING OFFICE. SEE SPECIFICATION SECTION 13110
2. FOR DETAIL SITE LAYOUT AND OTHER PROJECT REQUIREMENTS, SEE SHEET C-25, C-26 AND C-27.

0 20 40 60 80 100
FEET

NOT FOR CONSTRUCTION

LA DPW ENGINEERING TRANSFORMING LOS ANGELES

CIP NO. AS-BID

INDEX NO.

| NO. | REVISIONS | DATE | BY |
|---|---|---|---|

CITY OF LOS ANGELES • DEPARTMENT OF PUBLIC WORKS • BUREAU OF ENGINEERING

CITY ENGINEER: GARY LEE MOORE, P.E.

| DESIGN GROUP | | DATE |
|---|---|---|
| ENGINEER: | SEAN ZAHEDI/DARSHNA PATEL LIC. NO. C-75974 | 07-14 |
| DESIGNED BY: | DARSHNA PATEL, CAN CHOW | 07-14 |
| DRAWN BY: | CAN CHOW, HIEP LAM | 07-14 |
| CHECKED BY: | ABID CHOWDHRY, P.E. | 07-14 |
| APPROVED BY: | BRAD JENSON, P.E. | 07-14 |

VERTICAL CONTROL: NGVD29, 1985 ADJ
HORIZONTAL CONTROL: NAD83, EPOCH 1991.5

SHEET TITLE: PLAN AND PROFILE (STA. 103+00 TO STA. 103+93.95)
PROJECT: VENICE DUAL FORCE MAIN
ADDRESS: MARINA DEL REY, CALIFORNIA

WORK ORDER NO. SZC11631

DRAWING NO. C-24

SHEET 30

REVISION DATES (DESIGN STAGE ONLY)

FILE: Q:\CAD DATA\SZCxxxxx\szc11631\civil\asbid\vdfmDc24.dgn
DATE: 09-Jul-14 09:52

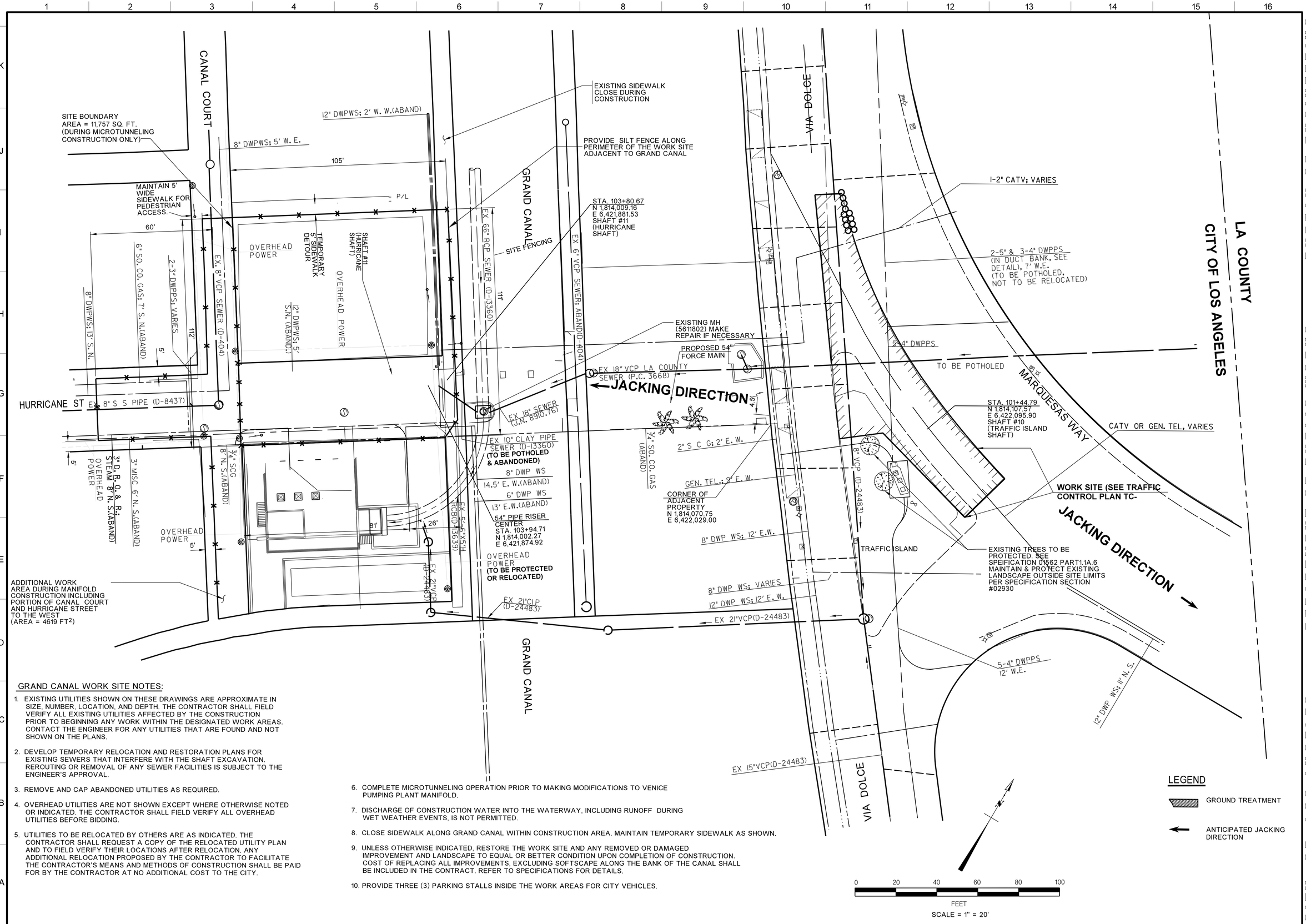


## GRAND CANAL WORK SITE NOTES:

1. EXISTING UTILITIES SHOWN ON THESE DRAWINGS ARE APPROXIMATE IN SIZE, NUMBER, LOCATION, AND DEPTH. THE CONTRACTOR SHALL FIELD VERIFY ALL EXISTING UTILITIES AFFECTED BY THE CONSTRUCTION PRIOR TO BEGINNING ANY WORK WITHIN THE DESIGNATED WORK AREAS. CONTACT THE ENGINEER FOR ANY UTILITIES THAT ARE FOUND AND NOT SHOWN ON THE PLANS.
2. DEVELOP TEMPORARY RELOCATION AND RESTORATION PLANS FOR EXISTING SEWERS THAT INTERFERE WITH THE SHAFT EXCAVATION. REROUTING OR REMOVAL OF ANY SEWER FACILITIES IS SUBJECT TO THE ENGINEER'S APPROVAL.
3. REMOVE AND CAP ABANDONED UTILITIES AS REQUIRED.
4. OVERHEAD UTILITIES ARE NOT SHOWN EXCEPT WHERE OTHERWISE NOTED OR INDICATED. THE CONTRACTOR SHALL FIELD VERIFY ALL OVERHEAD UTILITIES BEFORE BIDDING.
5. UTILITIES TO BE RELOCATED BY OTHERS ARE AS INDICATED. THE CONTRACTOR SHALL REQUEST A COPY OF THE RELOCATED UTILITY PLAN AND TO FIELD VERIFY THEIR LOCATIONS AFTER RELOCATION. ANY ADDITIONAL RELOCATION PROPOSED BY THE CONTRACTOR TO FACILITATE THE CONTRACTOR'S MEANS AND METHODS OF CONSTRUCTION SHALL BE PAID FOR BY THE CONTRACTOR AT NO ADDITIONAL COST TO THE CITY.
6. COMPLETE MICROTUNNELING OPERATION PRIOR TO MAKING MODIFICATIONS TO VENICE PUMPING PLANT MANIFOLD.
7. DISCHARGE OF CONSTRUCTION WATER INTO THE WATERWAY, INCLUDING RUNOFF DURING WET WEATHER EVENTS, IS NOT PERMITTED.
8. CLOSE SIDEWALK ALONG GRAND CANAL WITHIN CONSTRUCTION AREA. MAINTAIN TEMPORARY SIDEWALK AS SHOWN.
9. UNLESS OTHERWISE INDICATED, RESTORE THE WORK SITE AND ANY REMOVED OR DAMAGED IMPROVEMENT AND LANDSCAPE TO EQUAL OR BETTER CONDITION UPON COMPLETION OF CONSTRUCTION. COST OF REPLACING ALL IMPROVEMENTS, EXCLUDING SOFTSCAPE ALONG THE BANK OF THE CANAL SHALL BE INCLUDED IN THE CONTRACT. REFER TO SPECIFICATIONS FOR DETAILS.
10. PROVIDE THREE (3) PARKING STALLS INSIDE THE WORK AREAS FOR CITY VEHICLES.

## LEGEND

GROUND TREATMENT

ANTICIPATED JACKING DIRECTION

REVISION DATES (DESIGN STAGE ONLY)

CITY OF LOS ANGELES • DEPARTMENT OF PUBLIC WORKS • BUREAU OF ENGINEERING

LA DPW ENGINEERING TRANSFORMING LOS ANGELES

| NO. | REVISIONS | DATE | BY: |
|---|---|---|---|

CIP NO. AS-BID

INDEX NO.

REGISTERED PROFESSIONAL ENGINEER SEAN ZAHEDI No. C046372 Exp. 12/31/15 CIVIL STATE OF CALIFORNIA

| | | DATE |
|---|---|---|
| CITY ENGINEER | GARY LEE MOORE, P.E. | 07-14 |
| DESIGN GROUP | | |
| ENGINEER: | SEAN ZAHEDI/DARSHNA PATEL LIC. NO. C-75974 | 07-14 |
| DESIGNED BY: | DARSHNA PATEL, CAN CHOW | 07-14 |
| DRAWN BY: | CAN CHOW, HIEP LAM | 07-14 |
| CHECKED BY: | ABID CHOWDHRY, P.E. | 07-14 |
| APPROVED BY: | BRAD JENSON, P.E. | 07-14 |

VERTICAL CONTROL: NGVD29, 1955 ADJ.
HORIZONTAL CONTROL: NAD83, EPOCH 1991.5

SHEET TITLE: GRAND CANAL WORK SITE

PROJECT: VENICE DUAL FORCE MAIN

ADDRESS: MARINA DEL REY, CALIFORNIA

WORK ORDER NO. SZC11631

DRAWING NO. C-25

SHEET 31

NOT FOR CONSTRUCTION

FILE: Q:\CAD DATA\SZCxxxx\szc11631\civil\asbld\vdfmDc25 grandcanal.dgn
DATE: 09-Jul-14 09:53

## NORTH BANK WORK SITE NOTES:

1. EXISTING UTILITIES SHOWN ON THESE DRAWINGS ARE APPROXIMATE IN SIZE, NUMBER, LOCATION, AND DEPTH. THE CONTRACTOR SHALL FIELD VERIFY ALL EXISTING UTILITIES PRIOR TO BEGINNING ANY WORK WITHIN THE DESIGNATED CONSTRUCTION AREAS. CONTACT THE ENGINEER FOR ANY UTILITIES THAT ARE FOUND AND NOT SHOWN ON THE PLANS.

2. REMOVE LANDSCAPING & IMPROVEMENTS AS INDICATED OR PER WRITTEN PERMISSION FROM THE ENGINEER. RESTORE THE WORK SITE AND ANY REMOVED OR DAMAGED IMPROVEMENT TO EQUAL OR BETTER CONDITION UPON COMPLETION OF CONSTRUCTION. COST FOR REPLACING ALL IMPROVEMENTS AND HARDSCAPE SHALL BE INCLUDED IN THE CONTRACT. REPLACEMENT OF ALL AFFECTED SOFTSCAPE SHALL BE PAID FOR BY ALLOWANCE ITEM IN THE CONTRACT.

3. MAINTAIN ACCESS TO COUNTY OF LOS ANGELES PARKING LOT OUTSIDE OF THE WORK AREA.

4. OVERHEAD UTILITIES ARE NOT SHOWN EXCEPT WHERE OTHERWISE NOTED OR INDICATED. THE CONTRACTOR SHALL FIELD VERIFY ALL OVERHEAD UTILITIES BEFORE BIDDING.

5. ALL OTHER TREES INSIDE WORK AREA NOT INDICATED FOR REMOVAL SHALL BE PROTECTED. THE CONTRACTOR SHALL ERECT TREE PROTECTION FENCES AND RECONNECT TEMPORARY IRRIGATION SYSTEM DURING CONSTRUCTION. SEE SPECIFICATIONS 01562 PART 1.1.A6 FOR ADDITIONAL REQUIREMENTS.

6. INSTALL 10-FT HIGH SOUND BARRIER WALL AS INDICATED.THE CONTRACTOR SHALL MODIFY WALL ALIGNMENT AS REQUIRED TO AVOID DAMAGING EXISTING TREES AND LANDSCAPING. THE CONTRACTOR SHALL DESIGN, INSTALL, MAINTAIN AND REMOVE ANY ADDITIONAL SHAFT SOUND BARRIER WALLS ENCLOSING THE SHAFT FOR ANY WORK TO BE PERFORMED DURING EXTENDED WORK HOURS, AS DESCRIBED IN SECTION 01562 PART 1.1.B. REMOVE ALL SOUND BARRIER WALLS AND THEIR FOUNDATION UPON COMPLETION OF CONSTRUCTION.

7. MAINTAIN TEMPORARY SIDE WALK AS SHOWN OR MODIFY PER FIELD CONDITIONS. PROVIDE CRUSHED STONE BASE WALKING SURFACE. PROVIDE TEMPORARY LIGHTING ALONG SIDEWALK DURING HOURS FROM 7 PM TO 7 AM. REMOVE SIDEWALK AT END OF CONSTRUCTION & RETURN SITE TO ORIGINAL CONDITIONS.

8. REPLACE ANY DAMAGED OR CRACKED ASPHALT PAVING OF THE PARKING LOT WITHIN THE WORK AREA. REFER TO "NOTE TO CONTRACTOR" ON R-SERIES DRAWINGS FOR REQUIREMENTS. REPLACE ANY DAMAGED CURB AND GUTTER PER SSPWC STANDARD.

9. DESIGN OF THE SACRIFICIAL ANODE SYSTEM SHALL BE COMPLETED BY CONTRACTOR'S CORROSION ENGINEER PER REQUIREMENTS IN SECTION 13110 & CP-3 DRAWING.

10. MAINTAIN & PROTECT EXISTING LANDSCAPE OUTSIDE SITE LIMITS PER SPECIFICATION SECTION 02930.

## LEGEND

- TREES TO BE REMOVED BY THE CONTRACTOR
- CHAIN LINK FENCING AND WORK SITE BOUNDARY
- 10' HIGH PERMETER SOUND BARRIER WALL
- ANTICIPATED JACKING DIRECTION
- LANDSCAPED AREA TO BE REMOVED BY CONTRACTOR
- JET GROUT ZONE, (SEE DRAWING C-15)

0 20 40 60 80 100
FEET
SCALE = 1" = 20'

NOT FOR CONSTRUCTION

CITY OF LOS ANGELES • DEPARTMENT OF PUBLIC WORKS • BUREAU OF ENGINEERING

LA DPW ENGINEERING INNOVATING FOR LOS ANGELES

| √ NO. | REVISIONS | DATE | BY: |
|---|---|---|---|
| | | | |

INDEX NO.

CIP NO. AS-BID

GARY LEE MOORE, P.E. CITY ENGINEER

| DESIGN GROUP | | DATE |
|---|---|---|
| ENGINEER: | SEAN ZAHEDI/DARSHNA PATEL LIC. NO. C-75974 | 07-14 |
| DESIGNED BY: | DARSHNA PATEL, CAN CHOW | 07-14 |
| DRAWN BY: | CAN CHOW, HIEP LAM | 07-14 |
| CHECKED BY: | ABID CHOWDHRY, P.E. | 07-14 |
| APPROVED BY: | BRAD JENSON, P.E. | 07-14 |

VERTICAL CONTROL: NGVD29, 1985 ADJ
HORIZONTAL CONTROL: NAD83, EPOCH 1991.5

SHEET TITLE: NORTH BANK WORK SITE
PROJECT: VENICE DUAL FORCE MAIN
ADDRESS: MARINA DEL REY, CALIFORNIA

WORK ORDER NO. SZC11631

DRAWING NO. C-26

SHEET 32

FILE: Q:\CAD DATA\SZCxxxxx\szc11631\civil\asbid\vdfmDc26 north bank.dgn
DATE: 09-Jul-14 09:55

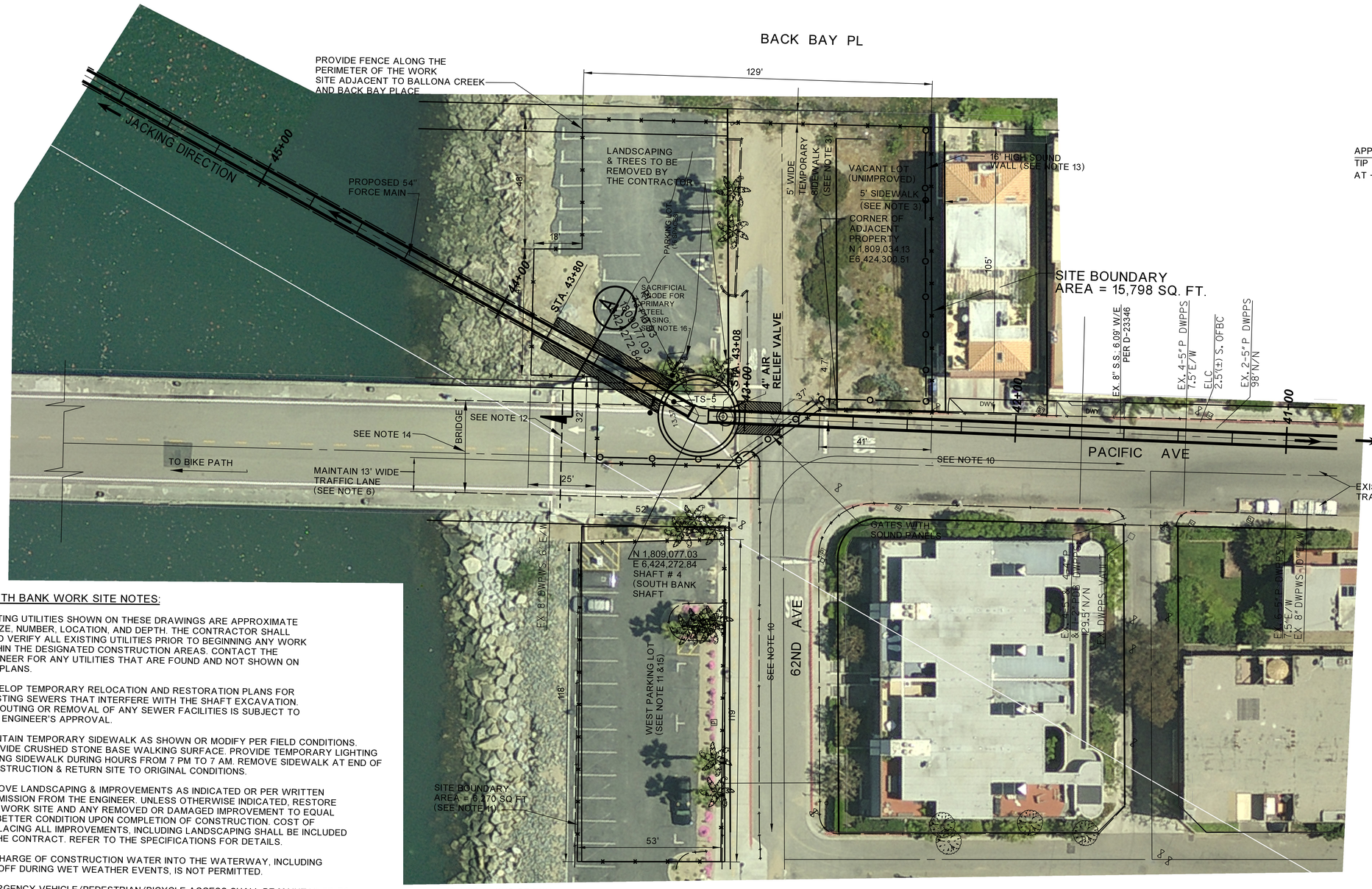


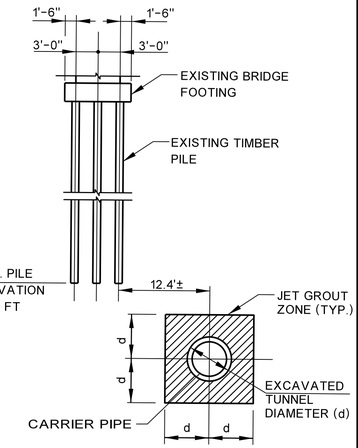


SECTION A
SCALE: NTS

## SOUTH BANK WORK SITE NOTES:

1. EXISTING UTILITIES SHOWN ON THESE DRAWINGS ARE APPROXIMATE IN SIZE, NUMBER, LOCATION, AND DEPTH. THE CONTRACTOR SHALL FIELD VERIFY ALL EXISTING UTILITIES PRIOR TO BEGINNING ANY WORK WITHIN THE DESIGNATED CONSTRUCTION AREAS. CONTACT THE ENGINEER FOR ANY UTILITIES THAT ARE FOUND AND NOT SHOWN ON THE PLANS.
2. DEVELOP TEMPORARY RELOCATION AND RESTORATION PLANS FOR EXISTING SEWERS THAT INTERFERE WITH THE SHAFT EXCAVATION. REROUTING OR REMOVAL OF ANY SEWER FACILITIES IS SUBJECT TO THE ENGINEER'S APPROVAL.
3. MAINTAIN TEMPORARY SIDEWALK AS SHOWN OR MODIFY PER FIELD CONDITIONS. PROVIDE CRUSHED STONE BASE WALKING SURFACE. PROVIDE TEMPORARY LIGHTING ALONG SIDEWALK DURING HOURS FROM 7 PM TO 7 AM. REMOVE SIDEWALK AT END OF CONSTRUCTION & RETURN SITE TO ORIGINAL CONDITIONS.
4. REMOVE LANDSCAPING & IMPROVEMENTS AS INDICATED OR PER WRITTEN PERMISSION FROM THE ENGINEER. UNLESS OTHERWISE INDICATED, RESTORE THE WORK SITE AND ANY REMOVED OR DAMAGED IMPROVEMENT TO EQUAL OR BETTER CONDITION UPON COMPLETION OF CONSTRUCTION. COST OF REPLACING ALL IMPROVEMENTS, INCLUDING LANDSCAPING SHALL BE INCLUDED IN THE CONTRACT. REFER TO THE SPECIFICATIONS FOR DETAILS.
5. DISCHARGE OF CONSTRUCTION WATER INTO THE WATERWAY, INCLUDING RUNOFF DURING WET WEATHER EVENTS, IS NOT PERMITTED.
6. EMERGENCY VEHICLE/PEDESTRIAN/BICYCLE ACCESS SHALL BE MAINTAINED TO BIKE PATH AT ALL TIMES.
7. THE CONTRACTOR SHALL REMOVE BURIED, ABANDONED RAILROAD TRACKS, RAILROAD TIES AND RAILROAD BALLAST AS REQUIRED TO PERFORM THE WORK.
8. OVERHEAD UTILITIES ARE NOT SHOWN EXCEPT WHERE OTHERWISE NOTED OR INDICATED. THE CONTRACTOR SHALL FIELD VERIFY ALL OVERHEAD UTILITIES BEFORE BIDDING.
9. UNLESS OTHERWISE INDICATED, PROTECT AND MAINTAIN LANDSCAPING, TREES, GUARD POSTS FROM CONSTRUCTION ACTIVITIES. ANY EXISTING FACILITIES INCLUDING, BUT NOT LIMITED TO SIGNS, PARKING METERS AND PAVEMENT THAT ARE REMOVED OR DAMAGED SHALL BE RESTORED UPON COMPLETION OF CONSTRUCTION.
10. NO STREET PARKING ALONG 62nd AVE WILL BE PERMITTED DURING CONSTRUCTION AS INDICATED.
11. WORK SITE TO THE WEST OF SHAFT IN THE WEST PARKING LOT WILL BE USED AS STORAGE ONLY AND SHALL BE RETURNED FOR PUBLIC USE DURING SUMMER FROM JUNE 1 TO SEPTEMBER 30.
12. LOCATIONS OF EXISTING BRIDGE EXPANSION JOINT AND FOUNDATIONS SHOWN FOR THE PACIFIC AVE. BRIDGE ARE APPROXIMATE. THE CONTRACTOR SHALL FIELD VERIFY THE LOCATIONS OF THE BRIDGE EXPENSION JOINT AND EXPOSED PORTIONS OF THE BRIDGE FOUNDATION PRIOR TO CONSTRUCTION.
13. INSTALL SOUND BARRIER WALL AS INDICATED. THE CONTRACTOR SHALL DESIGN, INSTALL, MAINTAIN AND REMOVE ANY ADDITIONAL SHAFT SOUND BARRIER WALLS ENCLOSING THE SHAFT FOR ANY WORK TO BE PERFORMED DURING EXTENDED WORK HOURS, AS DESCRIBED IN SECTION 01562 PART 1.1.B. REMOVE ALL SOUND BARRIER WALLS AND THEIR FOUNDATION WHEN COMPLETION OF CONSTRUCTION.
14. DO NOT STOCKPILE CONSTRUCTION MATERIAL OR DRIVE CONSTRUCTION EQUIPMENT ONTO THE BRIDGE. THE BRIDGE IS RATED FOR PEDESTRIAN TRAFFIC ONLY.
15. REPLACE ANY DAMAGED OR CRACKED ASPHALT PAVING OF PARKING LOT WITHIN THE WORK AREA. REFER TO "NOTE TO CONTRACTOR" OR R-SERIES DRAWINGS FOR REQUIREMENT. REPLACE ANY DAMAGED CURB AND GUTTER PER SSPWL STARDARD.
16. DESIGN OF THE SACRIFICIAL ANODE SYSTEM SHALL BE COMPLETED BY CONTRACTOR'S CORROSION ENGINEER PER REQUIREMENTS IN SECTION 13110 & CP-3 DRAWING.

## LEGEND

- CHAIN LINK FENCING AND WORK SITE BOUNDARY
- 16' HIGH PERMETER SOUND BARRIER WALL
- ANTICIPATED JACKING DIRECTION
- JET GROUT ZONE SEE DRAWING C-11

0 20 40 60 80 100
FEET
SCALE = 1" = 20'

NOT FOR CONSTRUCTION

LA DPW ENGINEERING TRANSFORMING LOS ANGELES

| NO. | REVISIONS | DATE | BY. |
|---|---|---|---|
| | | | |

CIP NO. AS-BID

INDEX NO.

REGISTERED PROFESSIONAL ENGINEER SEAN ZAHEDI No. C046372 Exp. 12/31/15 CIVIL STATE OF CALIFORNIA

CITY OF LOS ANGELES • DEPARTMENT OF PUBLIC WORKS • BUREAU OF ENGINEERING

| | | DATE |
|---|---|---|
| CITY ENGINEER | GARY LEE MOORE, P.E. | |
| DESIGN GROUP | | |
| ENGINEER: | SEAN ZAHEDI/DARSHNA PATEL LIC. NO. C-75974 | 07-14 |
| DESIGNED BY: | DARSHNA PATEL, CAN CHOW | 07-14 |
| DRAWN BY: | CAN CHOW, HIEP LAM | 07-14 |
| CHECKED BY: | ABID CHOWDHRY, P.E. | 07-14 |
| APPROVED BY: | BRAD JENSON, P.E. | 07-14 |

VERTICAL CONTROL: NGVD29, 1985 ADJ
HORIZONTAL CONTROL: NAD83, EPOCH 1991.5

SHEET TITLE: SOUTH BANK WORK SITE
PROJECT: VENICE DUAL FORCE MAIN
ADDRESS: MARINA DEL REY, CALIFORNIA

WORK ORDER NO. SZC11631
DRAWING NO. C-27
SHEET 33

REVISION DATES (DESIGN STAGE ONLY)

FILE: Q:\CAD DATA\SZCxxxxx\szct11631\civil\asbid\vdfmDc27south bank.dgn
DATE: 09-Jul-14 09:57

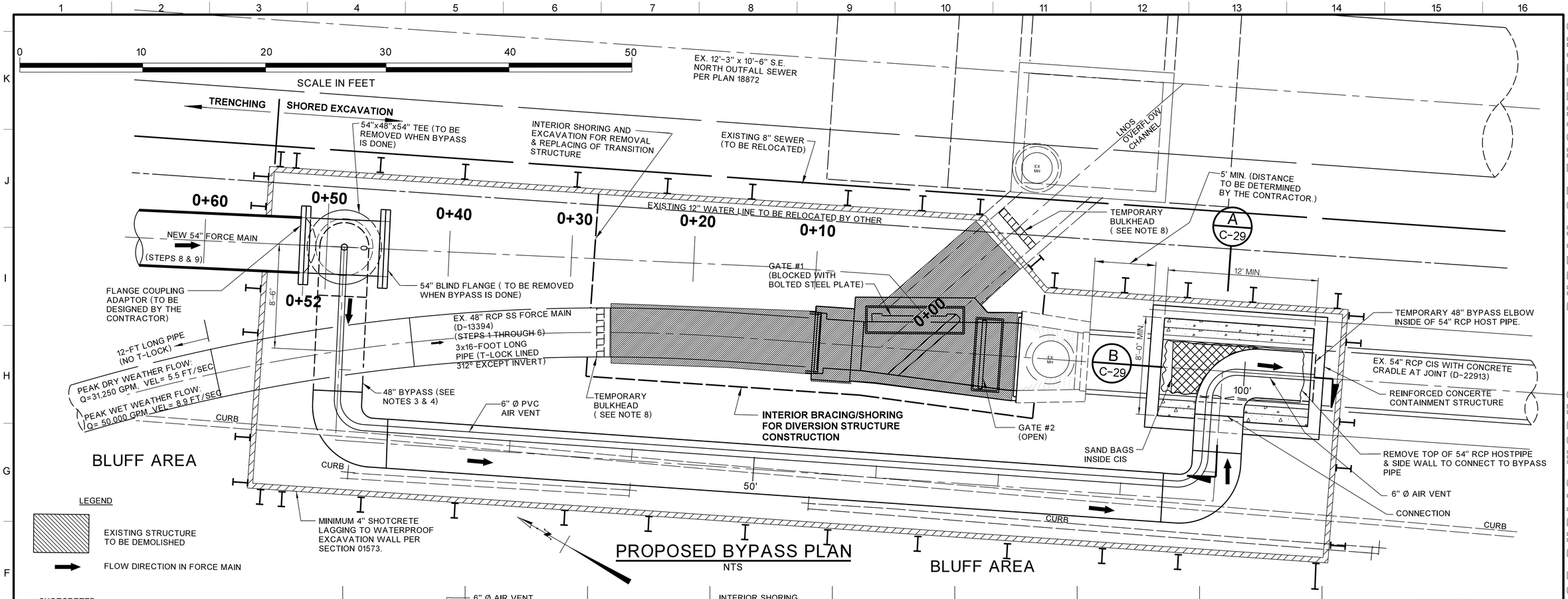


## PROPOSED BYPASS PLAN

NTS

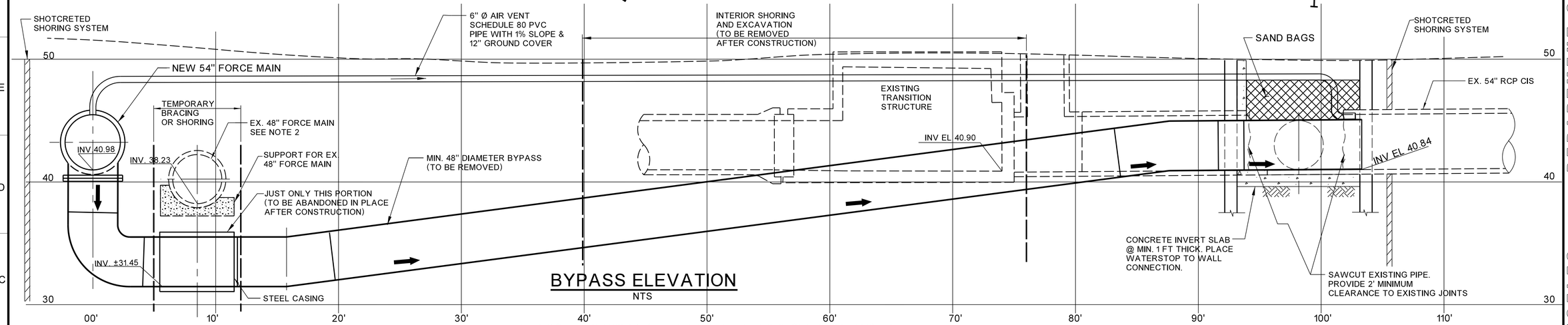


## BYPASS ELEVATION

NTS

### SEQUENCE FOR BYPASSING THE EXISTING CIS JUNCTION STRUCTURE: (PART I)

NOTES:

1. COMPLETE CONSTRUCTION OF THE NEW 54" FORCE MAIN TO STATION 0+52 OF THE ALIGNMENT. COMPLETE PRESSURE TESTING OF THE LINE TO THE HURRICANE MANIFOLD.
2. AT THE TERMINATION OF THE 54" FORCE MAIN ESTABLISHED IN STEP 1, CONSTRUCT A "TEE" CONFIGURATION WITH A BLIND FLANGE THAT ALLOWS FOR DIVERTED FLOW ONCE BYPASS IS CONSTRUCTED. EXPOSE EXISTING RCP PIPELINE & FOUNDATION AT BYPASS CROSSING ERECT STEEL CASING PROTECTION.
3. CONSTRUCT A MININUM 48" DIAMETERTEMPORARY BYPASS FROM THE "TEE" CONFIGURATION TO THE WATER TIGHT REINFORCED CONCRETE CONTAINMENT STRUCTURE WHERE THE TOP AND SIDEWALL OF 54" RCP CIS WILL BE REMOVED. EXACT ALIGNMENT AND DETAILS DESIGN OF THE PIPE AND ALIGNMENT TO BE DETERMINED BY THE CONTRACTOR. INVERT OF THE UPSTREAM AND DOWSTREAM ENDS OF THE BYPASS HEAD TO BE MORE THAN 0.1 FT APART.
4. DESIGN THE BYPASS PIPE & TEE PER REQUIREMENT IN SECTION 15720 OR APPROVED EQUIVALENT. PROVIDE PIPE RESTRAINT SUCH AS THRUST BLOCK , WELDED JOINTS, CONCRETE ENCASEMENT, AND ANCHORS WHERE APPLICABLE. PERFORM PRESSURE TEST OF THE TEMPORARY BYPASS PER SPECIFICATION 15042. REPAIR AND SEAL ALL LEAKAGE.
5. DIVERT EXISTING FLOW AWAY FROM DOWNSTREAM CIS TO LNOS OVERFLOW CHANNEL. REMOVE EXISTING CONCRETE PANEL BLOCKING GATE #1 (CONCRETE PANEL IS BOLTED IN PLACE USING MULTIPLE LEVEL STAINLESS STEEL BARS) DURING LOW FLOW CONDITION, FURNISH TIMBER STOPLOG PER DESIGN AS INDICATED ON D-22913 SHEET #18 OR APPROVED EQUIVALENT AND INSERT INTO GATE #2 TO STOP FLOW DOWNSTREAM. COORDINATE WITH THE CITY AT LEAST 48 HOURS IN ADVANCE BEFORE MAKING ANY ADJUSTMENTS TO STOP LOGS.
6. HAND EXCAVATE AND EXPOSE EXISTING CIS STRUCTURE AT TIE IN LOCATION. EXPOSE AND EVALUATE EXISTING JOINT CONDITIONS. CAST CONCRETE WALLS AND CRADLE TO ENCASE THE OPENING FOR CONTAINMENT PURPOSE. THE CONTRACTOR SHALL REMOVE PORTION OF CIS PIPE STRUCTURE. CONNECTING THE ELBOW TO THE BYPASS PIPE. STAY AT LEAST 2' CLEAR FROM EXISTING PIPE JOINT.
7. INSTALL TEMPORARY ELBOW CONNECTING THE BYPASS TO THE CIS. PUT THE SAND BAGS BEHIND AND ON TOP OF 48" ELBOW TO SECURE THE CONNECTION. SEAL LEAKAGE WITH GROUT. COMPLETE 6" Ø AIR VENT AS SHOWN.
8. AT VENICE PUMPING PLANT, BEGIN DIVERTING FLOW INTO THE NEW 54" FORCE MAIN AND CEASE FLOW FROM THE EXISTING 48" FORCE MAIN.

9*. EXCAVATE AND REMOVE EXISTING STRUCTURE AS INDICATED. ERECT TEMPORARY BULKHEAD AT THE OPENINGS OF THE EXISTING 48" FORCE MAIN AND THE OVERFLOW CHANNEL TO LNOS.

* SEE LEGEND ON SHEET C-29.

CITY OF LOS ANGELES • DEPARTMENT OF PUBLIC WORKS • BUREAU OF ENGINEERING

LA DPW ENGINEERING TRANSFORMING LOS ANGELES

| REVISIONS | | | |
|---|---|---|---|
| NO. | | DATE | BY |

CIP NO. AS-BID

INDEX NO.

REGISTERED PROFESSIONAL ENGINEER SEAN ZAHEDI No. C046372 Exp. 12/31/15 CIVIL STATE OF CALIFORNIA

| CITY ENGINEER | | DATE |
|---|---|---|
| DESIGN GROUP | GARY LEE MOORE, P.E. | |
| ENGINEER: | SEAN ZAHEDI/DARSHNA PATEL LIC. NO. C-75974 | 07-14 |
| DESIGNED BY: | DARSHNA PATEL, CAN CHOW | 07-14 |
| DRAWN BY: | CAN CHOW, HIEP LAM | 07-14 |
| CHECKED BY: | ABID CHOWDHRY, P.E. | 07-14 |
| APPROVED BY: | BRAD JENSON, P.E. | 07-14 |

VERTICAL CONTROL: NGVD29, 1985 ADJ.
HORIZONTAL CONTROL: NAD83, EPOCH 1991.5

SHEET TITLE: BYPASS AT WATERVIEW

PROJECT: VENICE DUAL FORCE MAIN

ADDRESS: MARINA DEL REY, CALIFORNIA

WORK ORDER NO. SZC11631

DRAWING NO. C-28

SHEET 34

NOT FOR CONSTRUCTION

REVISION DATES (DESIGN STAGE ONLY)

FILE: Q:\CAD DATA\SZCxxxxx\szc11631\civil\asbid\vdfmDc28.dgn
DATE: 09-Jul-14 09:58

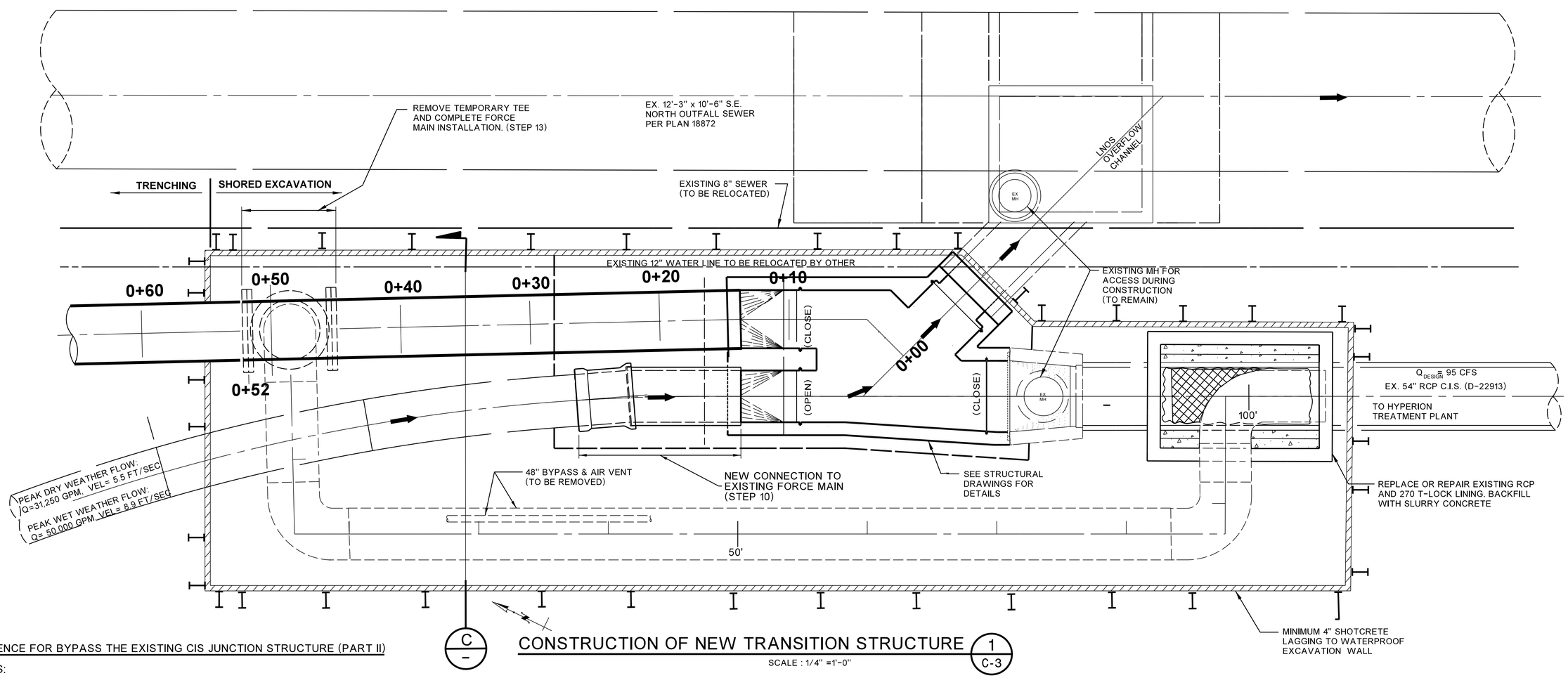


## CONSTRUCTION OF NEW TRANSITION STRUCTURE (1 / C-3)

SCALE : 1/4" =1'-0"

## SEQUENCE FOR BYPASS THE EXISTING CIS JUNCTION STRUCTURE (PART II)

NOTES:

10*. CONSTRUCT NEW DIVERSION STRUCTURE AND MAKE NEW CONNECTION TO EXISTING FORCE MAIN.

11*. CLOSE SLIDE GATES TO THE DOWNSTREAM 54" CIS PIPE AND THE LAST SECTION OF THE 54" FORCE MAIN. REMOVE ALL TEMPORARY BULKHEADS INSTALLED IN STEP 9.

12*. HAND EXCAVATE TO EXPOSE EXISTING 48" RCP.PLACE IN CONCRETE ENCASEMENT FOR ADDITIONAL RESTRAINT. DIVERT THE UPSTREAM FLOW FROM THE 54" TO THE EXISTING 48" FORCE MAIN AT VENICE PUMPING PLANT. FLOW WILL BE ROUTED THROUGH THE NEW DIVERSION STRUCTURE, VIA THE OVERFLOW CHANNEL TO LNOS.

13*. REMOVE "TEE" INSTALLED IN STEP NO. 2. COMPLETE LAST SECTION OF 54" FORCE MAIN TO THE NEW DIVERSION STRUCTURE. MAKE REPAIR TO THE 54" CIS PIPELINEAND PROTECTIVE LINING.

14 SEE SHEET C-30 FOR FINAL FLOW CONDITIONS SCHEMATIC PIPELINE DESIGN AND SETTING OF STOP LOGS. RE-DIVERT EXISTING FLOW VIA NEW 54-INCH FORCE MAIN.

15. REMOVE ALL SECTIONS OF THE TEMPORARY BYPASS PIPE. SECTION OF BYPASS PIPE UNDERNEATH EXISTING 48" RCP WILL BE ABANDONED IN PLACE & BACKFILL WITH SLURRY CONCRETE.

16. BACKFILL THE ENTIRE EXCAVATION AND RESTORE THE STREET TO ORIGINAL GRADE.

LEGEND

FLOW DIRECTION IN FORCE MAIN

* CONSTRUCTION ACTIVITIES TO BE COMPLETED DURING DRY SEASON ONLY.

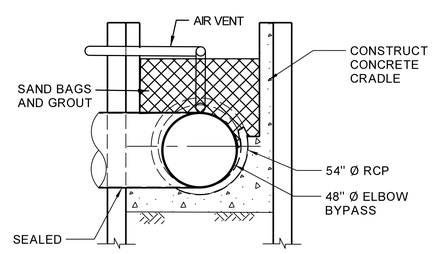


## SECTION (A / C-28)

NTS

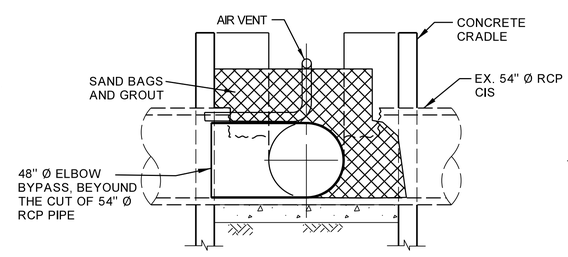


## SECTION (B / C-28)

NTS

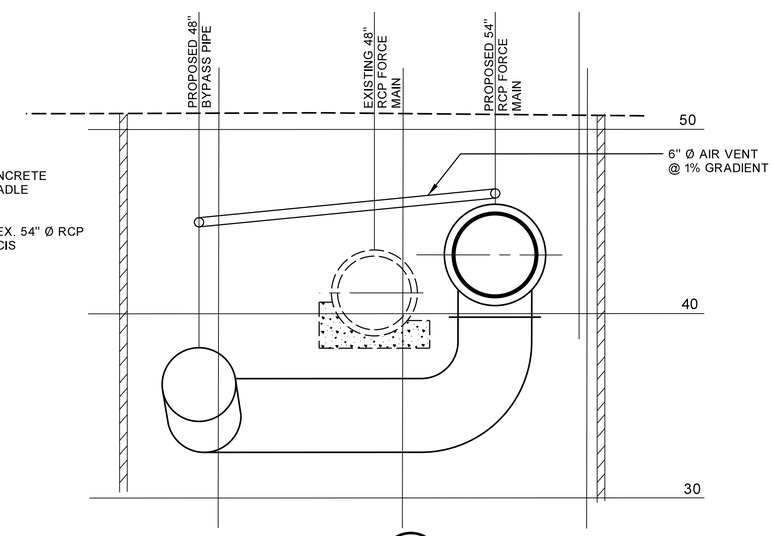


## SECTION (C / -)

NTS

REVISION DATES (DESIGN STAGE ONLY)

CITY OF LOS ANGELES • DEPARTMENT OF PUBLIC WORKS • BUREAU OF ENGINEERING

LA DPW ENGINEERING TRANSFORMING LOS ANGELES

| NO. | REVISIONS | DATE | BY: |
|---|---|---|---|

CIP NO. AS-BID

REGISTERED PROFESSIONAL ENGINEER SEAN ZAHEDI No. C046372 Exp. 12/31/15 CIVIL STATE OF CALIFORNIA

| | | |
|---|---|---|
| CITY ENGINEER | GARY LEE MOORE, P.E. | DATE |
| DESIGN GROUP | | |
| ENGINEER: | SEAN ZAHEDI/DARSHNA PATEL LIC. NO. C-75974 | 07-14 |
| DESIGNED BY: | DARSHNA PATEL, CAN CHOW | 07-14 |
| DRAWN BY: | CAN CHOW, HIEP LAM | 07-14 |
| CHECKED BY: | ABID CHOWDHRY, P.E. | 07-14 |
| APPROVED BY: | BRAD JENSON, P.E. | 07-14 |

VERTICAL CONTROL: NGVD29, 1985 ADJ.
HORIZONTAL CONTROL: NAD83, EPOCH 1991.5

SHEET TITLE: BYPASS AT WATERVIEW & SECTIONS

PROJECT: VENICE DUAL FORCE MAIN

ADDRESS: MARINA DEL REY, CALIFORNIA

WORK ORDER NO. SZC11631

DRAWING NO. C-29

SHEET 35

NOT FOR CONSTRUCTION

FILE: Q:\CAD DATA\SZCxxxx\szc11631\civil\asbid\vdfmDc29.dgn
DATE: 09-Jul-14 09:59

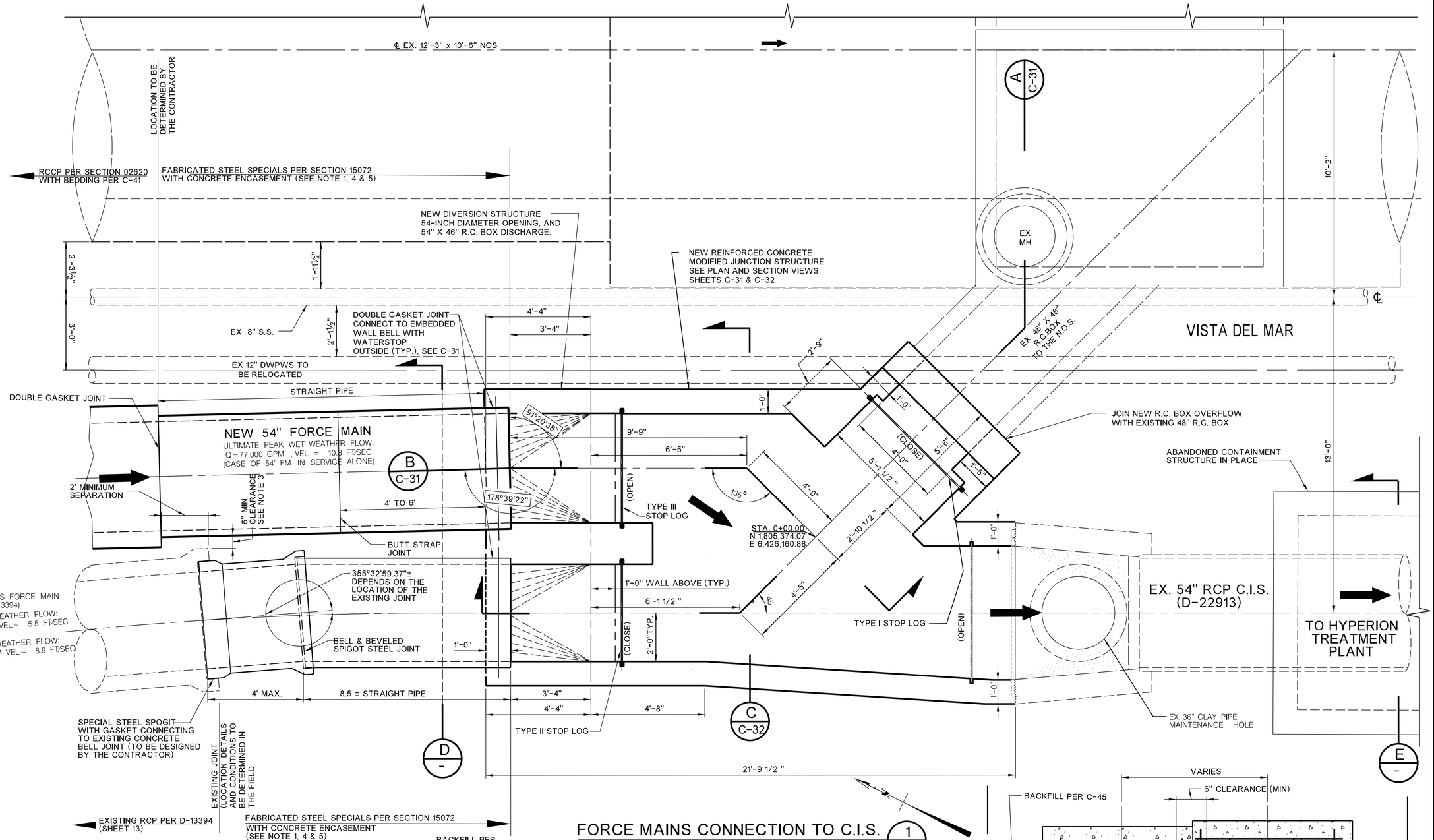


## FORCE MAINS CONNECTION TO C.I.S. (1 / C-2)

SCALE : ½" =1'-0"

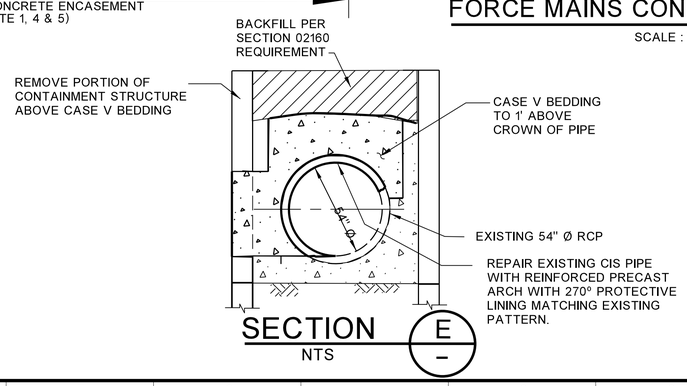


## SECTION (E / -)

NTS

## LEGEND

FLOW DIRECTION IN FORCE MAIN

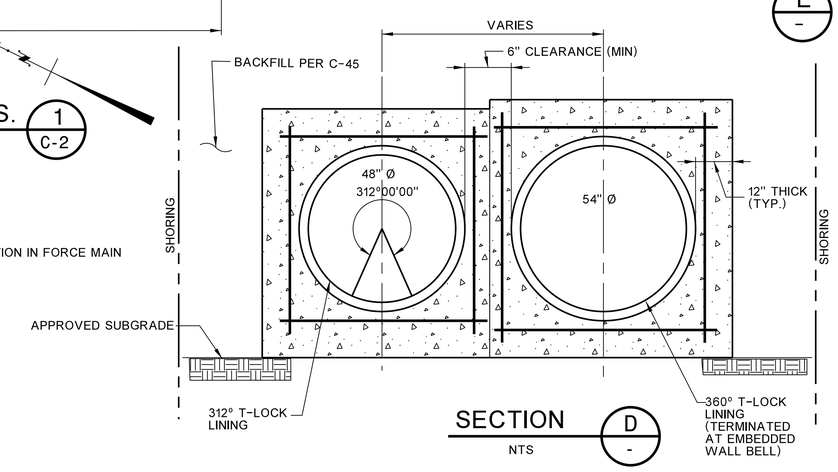


## SECTION (D / -)

NTS

## NOTES :

1. ALIGN CONSTRUCTION JOINT OF THE CONCRETE ENCASEMENT AT PIPE JOINT LOCATIONS.
2. JOINT TYPES SHOWN ARE FOR CONTRACTOR'S INFORMATION ONLY. SUBMIT DETAILS FOR ENGINEER'S APPROVAL.
3. MAINTAIN MINIMUM CLEARANCE OF 6 INCHES BETWEEM THE NEW AND OLD FORCE MAINS.
4. ADD BUTT STRAP JOINT FOR CLOSURE IF NOT CONSTRUCT TOGETHER WITH THE DIVERSION STRUCTURE.
5. INSTALL CATHODIC PROTECTION SYSTEM FOR STEEL PIPELINES SUBMIT DETAILS FOR ENGINEER APPROVAL.

REVISION DATES (DESIGN STAGE ONLY)

CITY OF LOS ANGELES • DEPARTMENT OF PUBLIC WORKS • BUREAU OF ENGINEERING

LA DPW ENGINEERING TRANSFORMING LOS ANGELES

| NO. | REVISIONS | DATE | BY: |
|---|---|---|---|

CIP NO. AS-BID

REGISTERED PROFESSIONAL ENGINEER SEAN ZAHEDI No. C046372 Exp. 12/31/15 CIVIL STATE OF CALIFORNIA

| | | DATE |
|---|---|---|
| CITY ENGINEER | GARY LEE MOORE, P.E. | |
| DESIGN GROUP | | |
| ENGINEER: | SEAN ZAHEDI/DARSHNA PATEL LIC. NO. C-75974 | 07-14 |
| DESIGNED BY: | DARSHNA PATEL, CAN CHOW | 07-14 |
| DRAWN BY: | CAN CHOW, HIEP LAM | 07-14 |
| CHECKED BY: | ABID CHOWDHRY, P.E. | 07-14 |
| APPROVED BY: | BRAD JENSON, P.E. | 07-14 |

VERTICAL CONTROL: NGVD29, 1985 ADJ
HORIZONTAL CONTROL: NAD83, EPOCH 1991.5

SHEET TITLE: DIVERSION STRUCTURE AT WATERVIEW - PLAN
PROJECT: VENICE DUAL FORCE MAIN
ADDRESS: MARINA DEL REY, CALIFORNIA

WORK ORDER NO. SZC11631
DRAWING NO. C-30
SHEET 36

NOT FOR CONSTRUCTION

FILE: Q:\CAD DATA\SZCxxxxx\szc11631\civil\asbid\vdfmDc30.dgn
DATE: 09-Jul-14 10:01

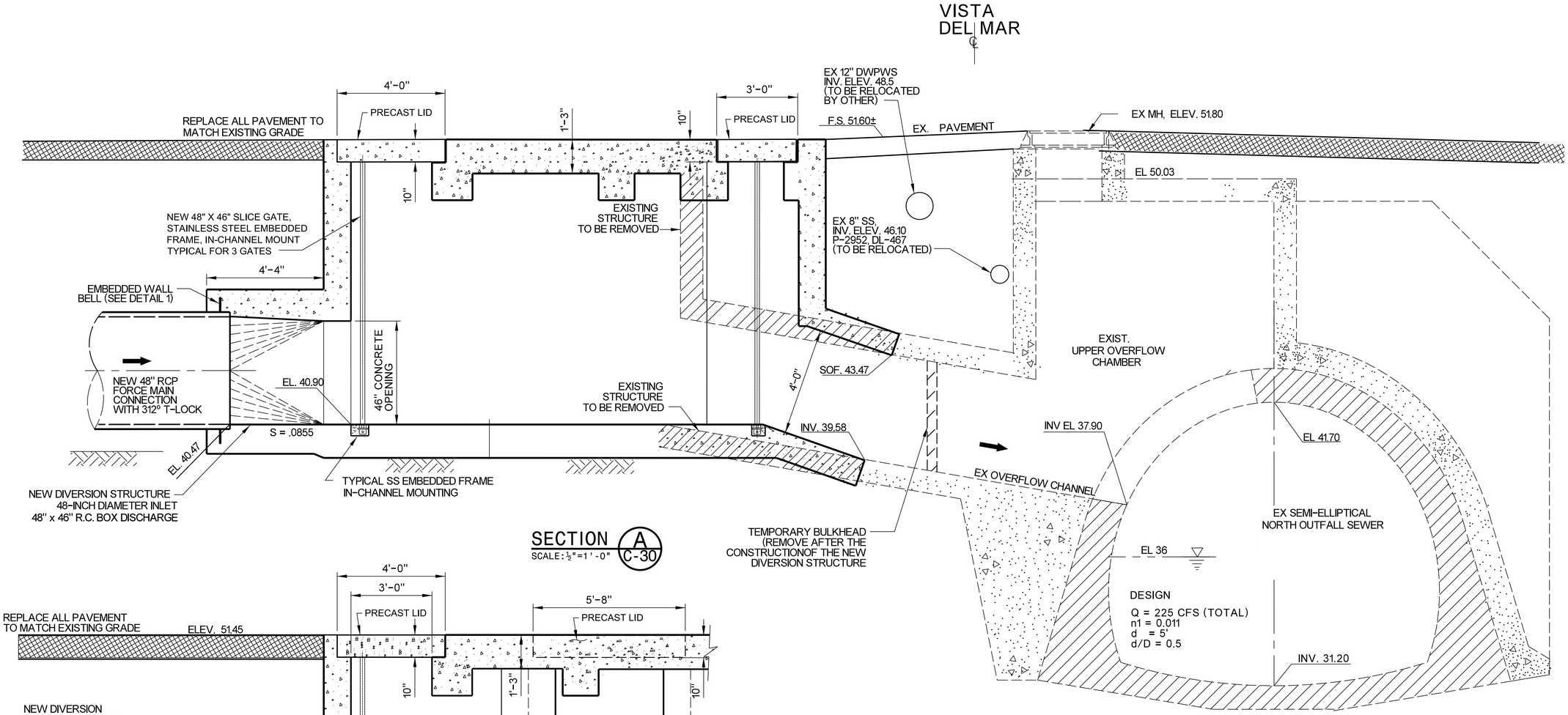


SECTION A C-30
SCALE: 1/2"=1'-0"

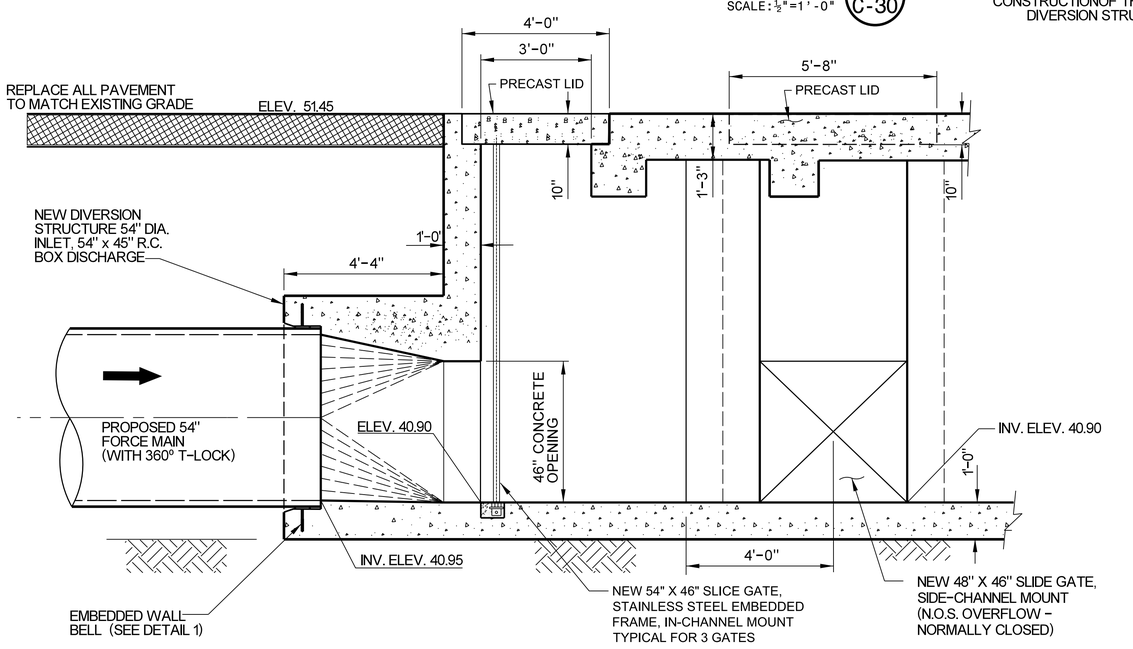


SECTION B C-30
SCALE: 1/2"=1'-0"

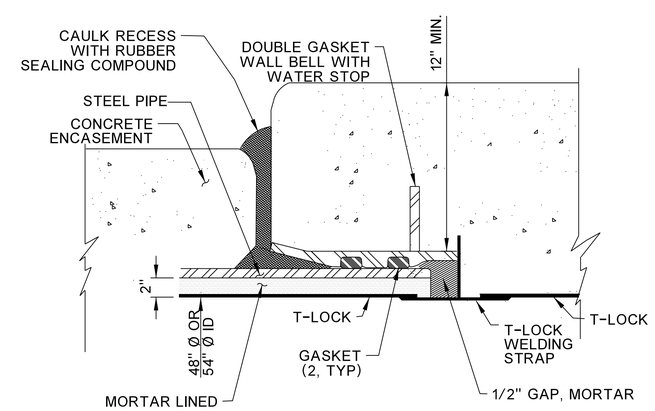


DETAIL 1
NTS

NOTE:

1. FOR PRECAST LID DETAILS SEE STRUCTURAL DRAWING S-10.

0 1 2 3 4 6 8 10
FEET

REVISION DATES (DESIGN STAGE ONLY)

FILE: Q:\CAD DATA\SZCxxxxx\szc11631\civil\asbid\vdfmdc31.dgn
DATE: 05-Jun-14 10:44

CITY OF LOS ANGELES • DEPARTMENT OF PUBLIC WORKS • BUREAU OF ENGINEERING

LA DPW ENGINEERING TRANSFORMING LOS ANGELES

| NO. | REVISIONS | DATE | BY. |
|---|---|---|---|

CIP NO. AS-BID

REGISTERED PROFESSIONAL ENGINEER SEAN ZAHEDI No. C046372 Exp. 12/31/15 CIVIL STATE OF CALIFORNIA

CITY ENGINEER: GARY LEE MOORE, P.E.

| DESIGN GROUP | LIC. NO. | DATE |
|---|---|---|
| ENGINEER: SEAN ZAHEDI/DARSHNA PATEL | C-75974 | 07-14 |
| DESIGNED BY: OSCAR GUTIERREZ, CAN CHOW | | 07-14 |
| DRAWN BY: CAN CHOW, HIEP LAM | | 07-14 |
| CHECKED BY: ABID CHOWDHRY, P.E. | | 07-14 |
| APPROVED BY: BRAD JENSON, P.E. | | |

VERTICAL CONTROL: NGVD29, 1985 ADJ
HORIZONTAL CONTROL: NAD83, EPOCH 1991.5

SHEET TITLE: DIVERSION STRUCTURE AT WATERVIEW-SECTIONS
PROJECT: VENICE DUAL FORCE MAIN
ADDRESS: MARINA DEL REY, CALIFORNIA

WORK ORDER NO. SZC11631
DRAWING NO. C-31
SHEET 37

NOT FOR CONSTRUCTION

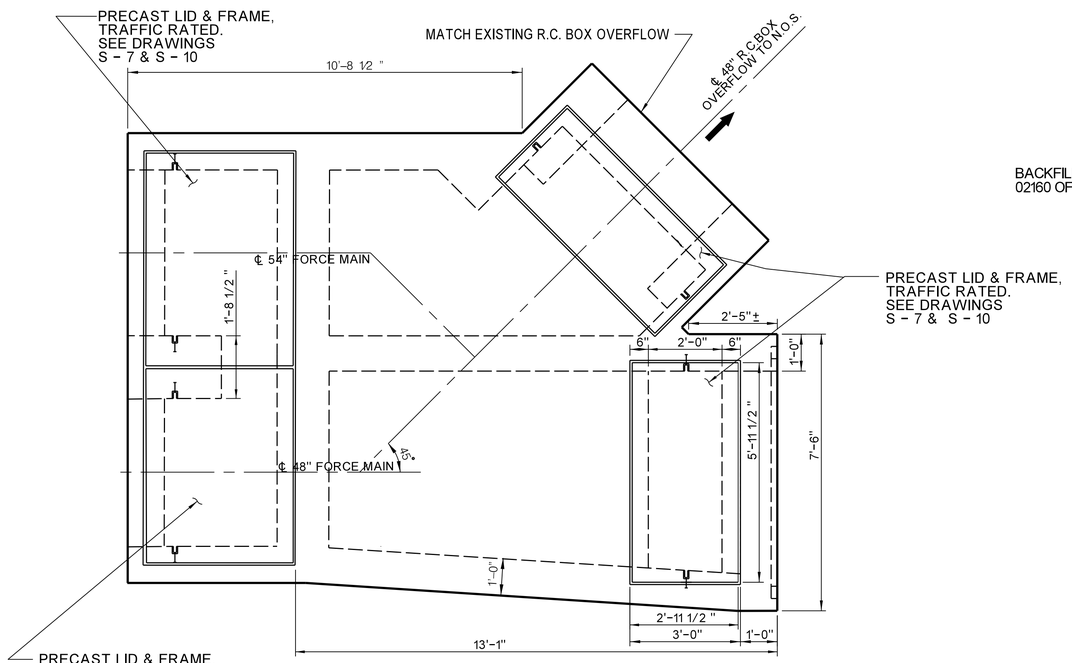


TOP SLAB OF NEW JUNCTION STRUCTURE INCLUDING OVERFLOW BOX TO N.O.S.

## PLAN VIEW

SCALE: ½" = 1'-0"

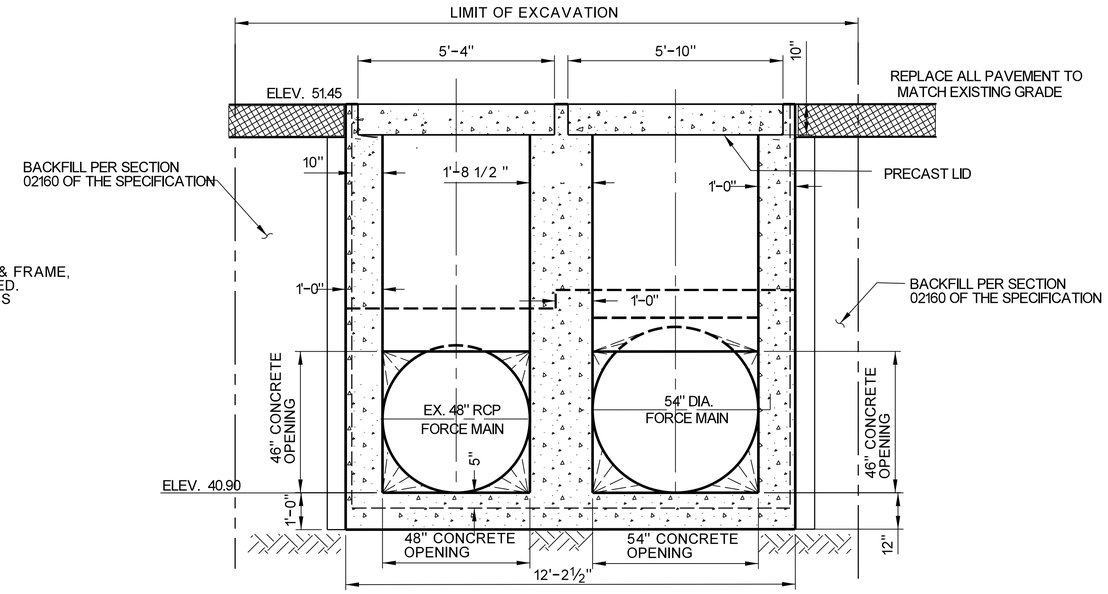


## SECTION C / C-30

SCALE: ½"=1'-0"

NOTE:

THE SLIDE GATES ARE NOT SHOWN FOR CLEARITY.

0 1 2 3 4 6 8 10
FEET

CITY OF LOS ANGELES • DEPARTMENT OF PUBLIC WORKS • BUREAU OF ENGINEERING

LA DPW ENGINEERING TRANSFORMING LOS ANGELES

| NO. | REVISIONS | DATE | BY. |
|---|---|---|---|

CIP NO. AS-BID

REGISTERED PROFESSIONAL ENGINEER SEAN ZAHEDI No. C046372 Exp. 12/31/15 CIVIL STATE OF CALIFORNIA

| CITY ENGINEER | | DATE |
|---|---|---|
| GARY LEE MOORE, P.E. | | |
| DESIGN GROUP | | |
| ENGINEER: | SEAN ZAHEDI/DARSHNA PATEL LIC. NO. C-75974 | 07-14 |
| DESIGNED BY: | OSCAR GUTIERREZ, CAN CHOW | 07-14 |
| DRAWN BY: | CAN CHOW, HIEP LAM | 07-14 |
| CHECKED BY: | ABID CHOWDHRY, P.E. | 07-14 |
| APPROVED BY: | BRAD JENSON, P.E. | 07-14 |

VERTICAL CONTROL: NGVD29, 1985 ADJ.
HORIZONTAL CONTROL: NAD83, EPOCH 1991.5

SHEET TITLE: DIVERSION STRUCTURE AT WATERVIEW-SECTION & TOP SLAB

PROJECT: VENICE DUAL FORCE MAIN

ADDRESS: MARINA DEL REY, CALIFORNIA

WORK ORDER NO. SZC11631

DRAWING NO. C-32

SHEET 38

NOT FOR CONSTRUCTION

REVISION DATES (DESIGN STAGE ONLY)

FILE: Q:\CAD DATA\SZCxxxxx\szc11631\civil\asbid\vdfmdc32.dgn
DATE: 09-Jul-14 10:10

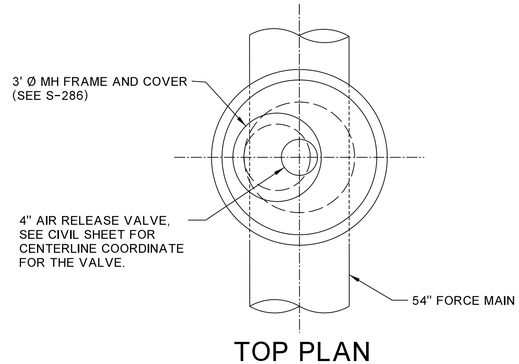


## TOP PLAN
NTS

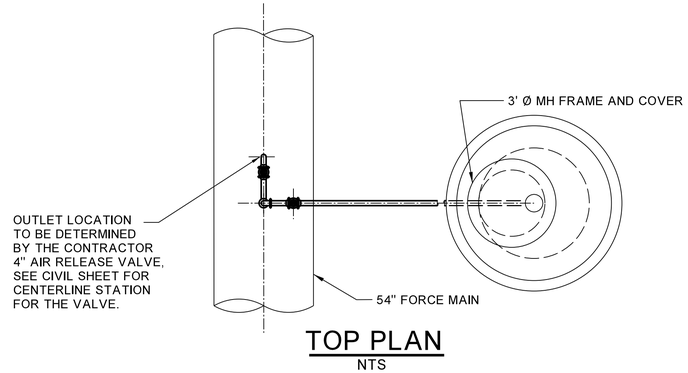


## TOP PLAN
NTS

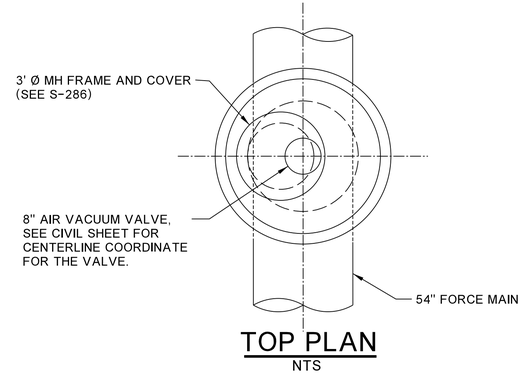


## TOP PLAN
NTS

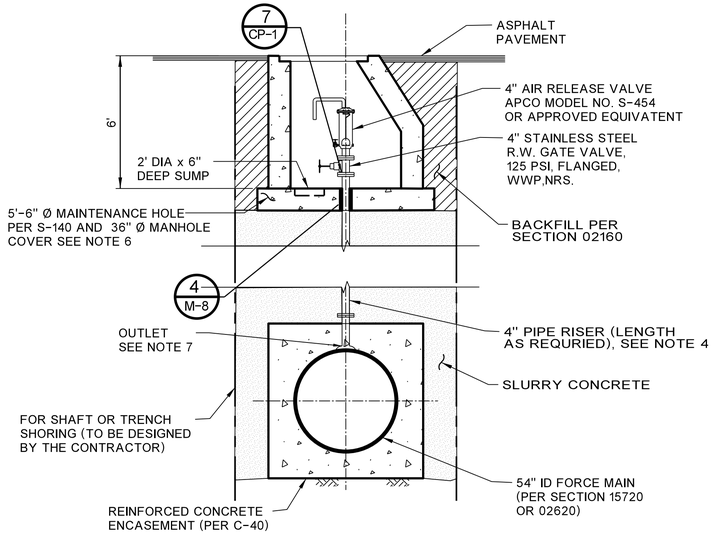


## 4" AIR RELEASE VALVE & MAINTENANCE VAULT
NTS

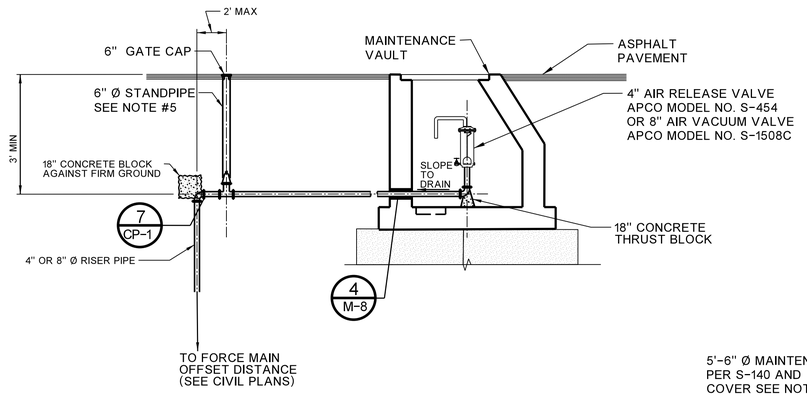


## VALVE INSTALLED AT OFFSET DISTANCE
NTS

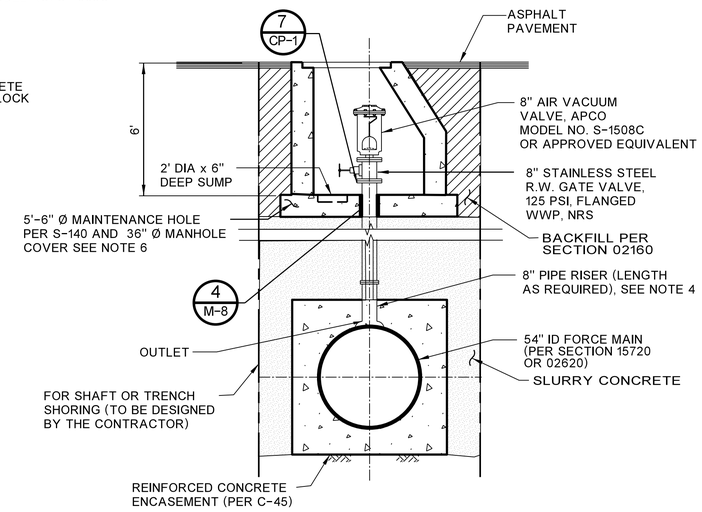


## 8" AIR VACUUM VALVE & MAINTENANCE VAULT
NTS

NOTE:

1. SEE PLAN AND PROFILE SHEETS , C-2 TO C-24 FOR LOCATIONS OF THESE FACILITIES.
2. RISER PIPE SHALL BE CEMENT MORTAR COATED AND EPOXY LINED STEEL PIPE OR CEMENT MORTAR COATED AND POLYURETHANE LINED STEEL PIPE.
3. TEMPORARY SUPPORT OF THE RISER PIPE TO BE DESIGNED BY THE CONTRACTOR.
4. ADD AN INSULATING JOINT ALONG THE RISER PIPE TO ISOLATE ELECTRICALLY THE FORCE MAIN FROM THE VALVE ASSEMBLY. THE LOCATION OF THE JOINT TO BE DETERMINED BY THE CONTRACTOR'S CORROSION ENGINEER. REFER TO SECTION 13110 FOR DETAILS.
5. WHEN VALVES ARE TO BE INSTALLED AT AN OFFSET DISTANCE FROM THE RISER LOCATE THE 4" GATE VALVE ALONG HORIZONTAL PORTION OF THE RISER PIPE AND A 6" DIA STANDPIPE DIRECTLY OVER THE GATE VALVE TO GROUND SURFACE. SLOPE THE HORIZONTAL RISER PIPE TO DRAIN TO THE FORCE MAIN.
6. POSITION MH AND COVER IN AN OPTIMUM LOCATION TO ALLOW EASY ACCESS TO MAINTAIN, REPAIR AND REPLACEMENT OF THE FACILITY INSTALLED INSIDE.
7. OUTLET TO BE LOCATED AT LEAST 18" FROM PIPE JOINT.

NOT FOR CONSTRUCTION

LA DPW ENGINEERING TRANSFORMING LOS ANGELES

| NO. | REVISIONS | DATE | BY |
|---|---|---|---|

CIP NO. AS-BID

INDEX NO.

REGISTERED PROFESSIONAL ENGINEER SEAN ZAHEDI No. C046372 Exp. 12/31/15 CIVIL STATE OF CALIFORNIA

CITY OF LOS ANGELES • DEPARTMENT OF PUBLIC WORKS • BUREAU OF ENGINEERING

| | | DATE |
|---|---|---|
| CITY ENGINEER | GARY LEE MOORE, P.E. | |
| ENGINEER: | SEAN ZAHEDI/DARSHNA PATEL LIC. NO. C-75974 | 07-14 |
| DESIGNED BY: | FRANCIS FONG | 07-14 |
| DRAWN BY: | CAN CHOW, HIEP LAM | 07-14 |
| CHECKED BY: | ABID CHOWDHRY, P.E. | 07-14 |
| APPROVED BY: | BRAD JENSON, P.E. | 07-14 |

VERTICAL CONTROL: NGVD29, 1985 ADJ
HORIZONTAL CONTROL: NAD83, EPOCH 1991.5

SHEET TITLE: AIR RELIEF VALVE & VACUUM VALVE & MAINTENANCE HOLES
PROJECT: VENICE DUAL FORCE MAIN
ADDRESS: MARINA DEL REY, CALIFORNIA

WORK ORDER NO. SZC11631

DRAWING NO. C-33

SHEET 39

REVISION DATES (DESIGN STAGE ONLY)

FILE: Q:\CAD DATA\SZCxxxxx\szc11631\civil\asbid\vdfmDc33.dgn
DATE: 09-Jul-14 10:12

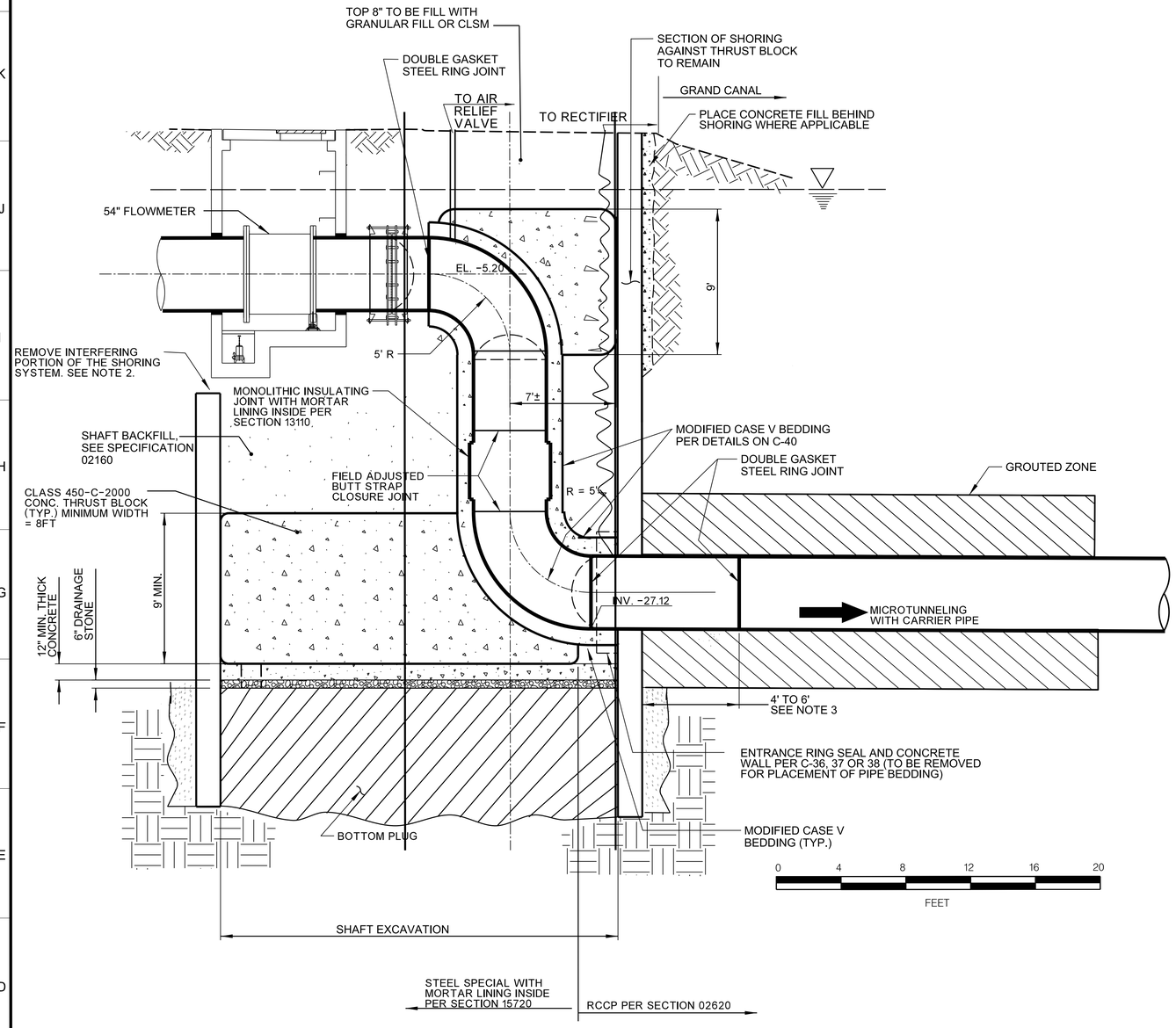


## DETAIL AT STA. 103+94.71
## SHAFT #11 (HURRICANE SHAFT)

SCALE: 1" = 4'

NOTE:

1. JOINTS AND FITTINGS DESIGN, LAYOUT AND LOCATIONS INSIDE THE SHAFT INCLUDING CLOSURE JOINT, ARE TO BE DETERMIND BY THE CONTRACTOR. THRUST BLOCK AS SHOWN IS FOR SCHEMATIC DESIGN ONLY. PROVIDE TIE DOWN OR ANCHOR TO WITHSTAND UPLIFT FORCE FROM THE RISER PIPE.
2. DEVELOP ALTERNATE WATER CONTROL SYSTEM TO MINIMIZE GROUND WATER SEEPAGE INTO THE SHAFT EXCAVATION.
3. FIRST RCCP PIPE JOINT AT 4' TO 6' AWAY FROM SHAFT WALL TO ACCOMMODATE FUTURE DIFFERENTAL MOVEMENT.
4. JOINT TYPES SHOWN ARE FOR CONTRACTOR'S INFORMATION ONLY. SUBMIT DETAILS FOR ENGINEER'S APPROVAL.

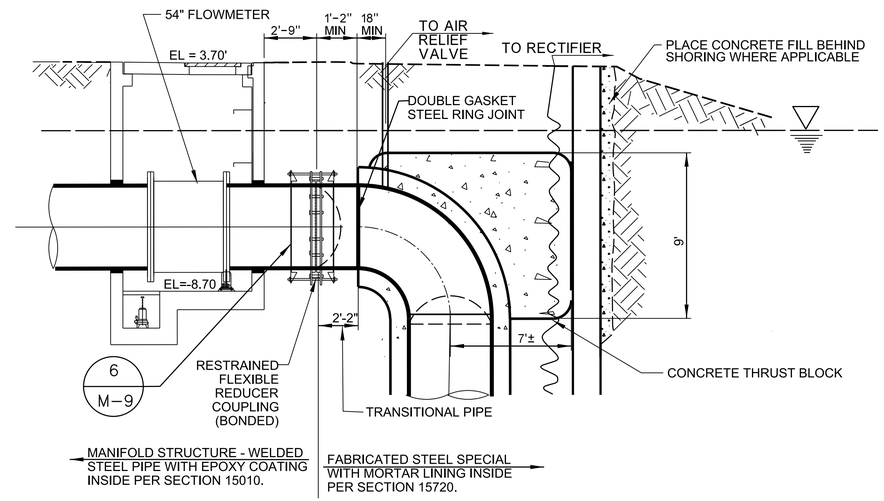


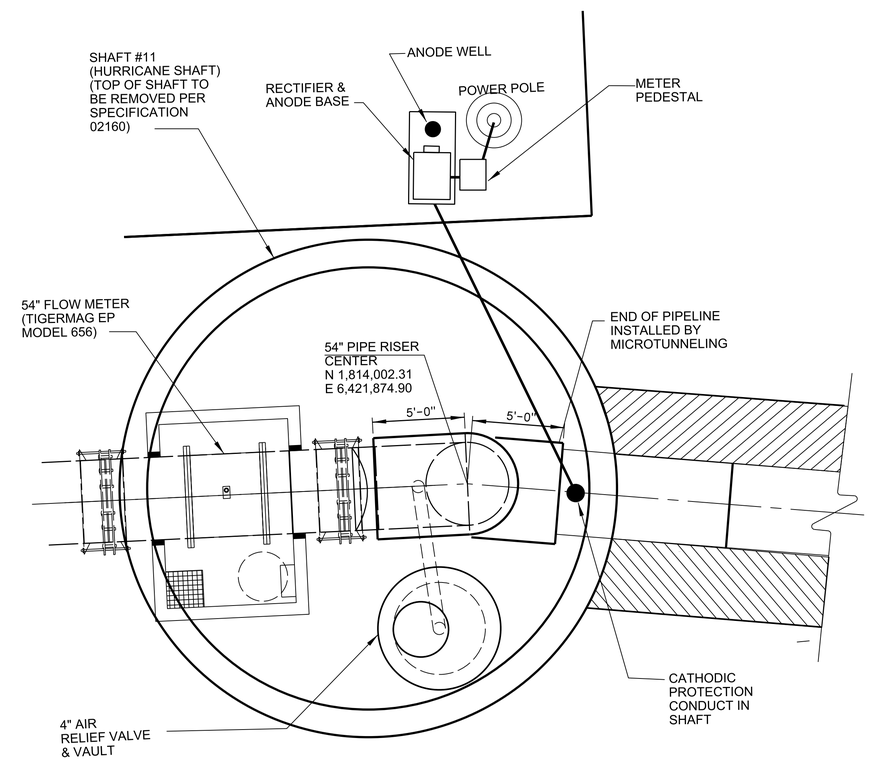


## SHAFT #11 (HURRICANE SHAFT) PLAN

NTS

NOTE:

UNDERGROUND UTILITIES ARE NOT SHOWN FOR CLARITY.

NOT FOR CONSTRUCTION

CIP NO. AS-BID

REVISIONS | DATE | BY

CITY OF LOS ANGELES • DEPARTMENT OF PUBLIC WORKS • BUREAU OF ENGINEERING

LA DPW ENGINEERING TRANSFORMING LOS ANGELES

CITY ENGINEER: GARY LEE MOORE, P.E.

DESIGN GROUP

ENGINEER: SEAN ZAHEDI/DARSHNA PATEL LIC. NO. C-75974 07-14
DESIGNED BY: DARSHNA PATE V 07-14
DRAWN BY: CAN CHOW, HIEP LAM 07-14
CHECKED BY: ABID CHOWDHRY, P.E. 07-14
APPROVED BY: BRAD JENSON, P.E. 07-14

VERTICAL CONTROL: NGVD29, 1985 ADJ.
HORIZONTAL CONTROL: NAD83, EPOCH 1991.5

SHEET TITLE: DETAILS

PROJECT: VENICE DUAL FORCE MAIN

ADDRESS: MARINA DEL REY, CALIFORNIA

WORK ORDER NO. SZC11631

DRAWING NO. C-34

SHEET 40

REVISION DATES (DESIGN STAGE ONLY)

FILE: Q:\CAD DATA\SZCxxxxx\szc11631\civil\asbid\vdfmDc34.dgn
DATE: 09-Jul-14 10:13

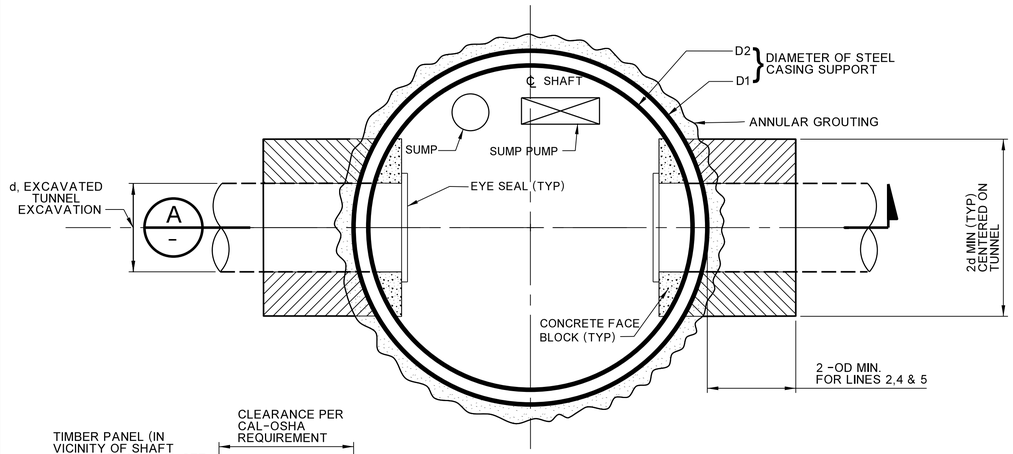


## PLAN
NTS

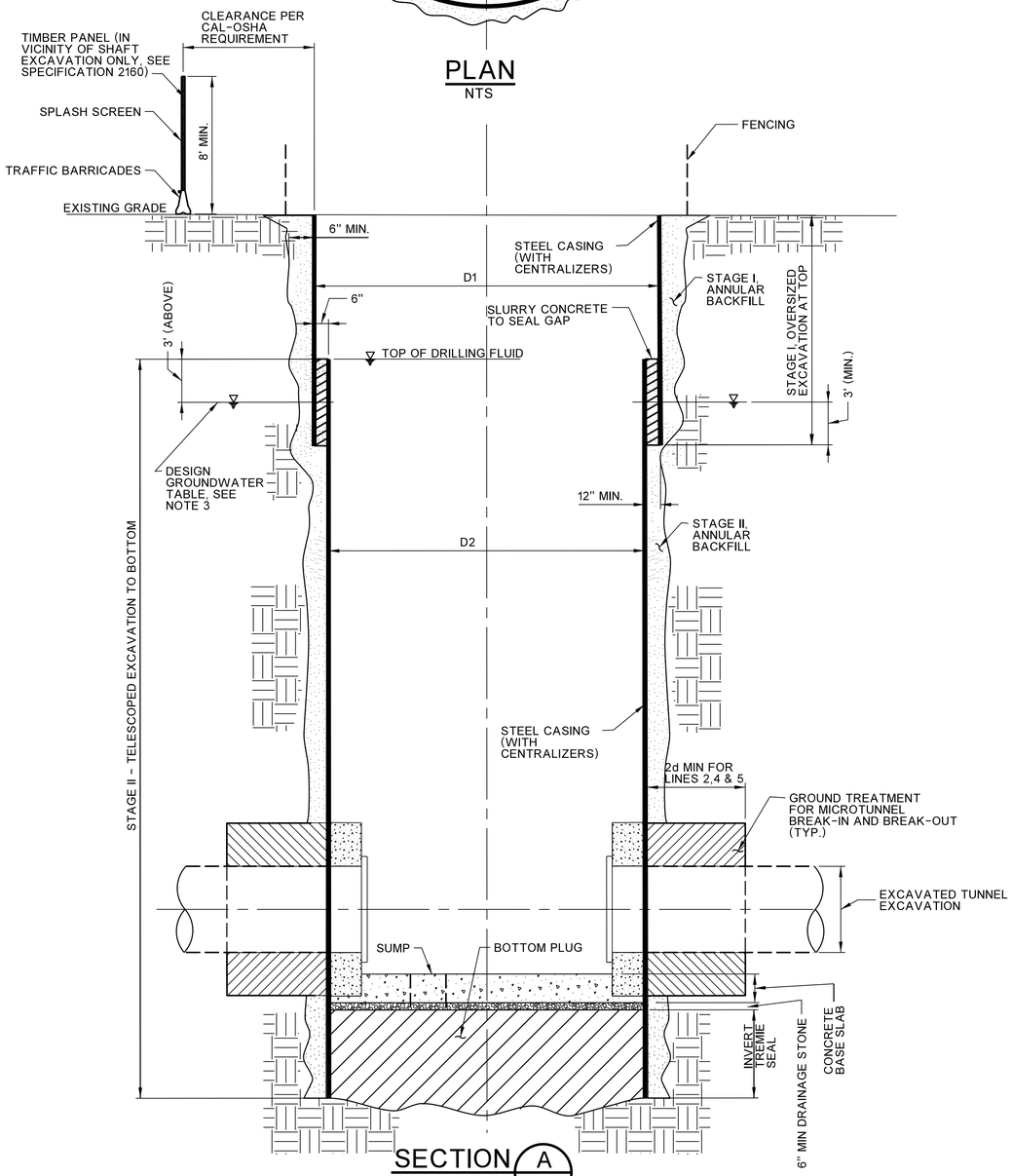


## SECTION A
NTS

NOTES:

1. LOCATIONS, DIMENSIONS AND DEPTH OF ACCESS SHAFT EXCAVATION, ARE TO BE DETERMINED BY THE CONTRACTOR BUT SHALL BE NO MORE THAN 50 FEET IN DEPTH TO FINISH INVERT. PROVIDE ACCESSES AND BARRICADES PER CAL OSHA AND LOS ANGELES DOT REQUIREMENTS. SPLASH SCREENS SHALL BE ERECTED ON TOP OF THE BARRICADES TO A MINIMUM HEIGHT OF 8-FT IN THE VICINITY OF ANY EXCAVATION TO BE PERFORMED IN THE "WET". THE CONTRACTOR SHALL REPLACE OR REPAIR ANY SPLASH SCREEN WHEN DAMAGED.

2. DESIGN THE WATER-TIGHT EXCAVATION SUPPORT SYSTEMS PER REQUIREMENTS IN THE SPECIFICATIONS. SUBMIT ALL REQUIRED DESIGN DETAILS TO THE CITY FOR APPROVAL. ALL ENGINEERING CALCULATIONS, DESIGN DRAWINGS AND WORK PLANS SHALL BE PREPARED AND STAMPED BY PROFESSIONAL CIVIL OR STRUCTURAL ENGINEER(S) REGISTERED IN THE STATE OF CALIFORNIA.

3. DESIGN GROUNDWATER TABLE ELEVATIONS SHALL BE TAKEN FROM THE GEOTECHNICAL BASELINE REPORT, PLATE NOS. 1 TO 23.

4. LEVEL BENCHES AND PROVIDE GROUND SURFACE SUPPORT FOR ANY DRILLING EQUIPMENT NEAR THE EXCAVATION.

5. STAGE I SUPPORT SYSTEM

   a. SHORE SHAFT SUPPORT SYSTEM TO AT LEAST 3 FEET BELOW THE DESIGN GROUNDWATER TABLE AS REPORTED IN THE GBR.

   b. THE CONTRACTOR MAY USE ANY OF THE CONSTRUCTION METHODS APPLICABLE IN THE "WET" CONDITIONS DESCRIBED IN SECTION 01573 OF THE SPECIFICATION.

   c. ALL VOIDS BETWEEN THE EXCAVATED SOILS AND THE BACK OF THE SHORING SUPPORT SHALL BE BACKFILLED WITH ANNULAR GROUT WITH A MINIMUM COMPRESSIVE STRENGTH OF 2,000 PSI PLACED BY TREMIE PIPES PRIOR TO STAGE II EXCAVATION.

6. STAGE II SUPPORT SYSTEM

   a. ADVANCE THE SMALLER DIAMETER SHAFT TO THE DEPTHS AND ORIENTATIONS SHOWN ON APPROVED CONTRACTOR'S WORK PLANS.

   b. EXCAVATION SHALL BE PERFORMED IN THE "WET" WITH CONTINUOUS SIDE SUPPORT USING SLURRY OR DRILLING FLUIDS. PLACE TEMPORARY STEEL CASING SUPPORT IN EXCAVATED OPENING DURING TIME OF EXCAVATION FOR WORK STOPPAGE MORE THAN 24 HOURS.

   c. PLACE FINAL STEEL CASING TO BOTTOM OF EXCAVATION. USE CENTROLIZERS TO MAINTAIN MINIMUM CLEARANCE FOR ANNULAR BACKFILL THICKNESS.

   d. INSTALL CONCRETE PLUG AT SHAFT INVERT TO DEPTH AS SHOWN ON APPROVED SUBMITTAL. USE TREMIE PIPES TO INSTALL CONCRETE PLUG IN THE "WET" FLUID AS REQUIRED. CONCRETE PLUG SHALL HAVE A MINIMUM 28-DAY COMPRESSIVE STRENGTH OF 2,000 PSI.

   e. BACKFILL ALL VOIDS BETWEEN THE EXCAVATED SOILS AND THE BACK OF THE STEEL CASING ABOVE THE CONCRETE PLUG WITH 2,000 PSI ANNULAR GROUT PLACED BY TREMIE PIPE A MAXIMUM OF 24 HOURS AFTER THE PLACEMENT OF THE PLUG.

   f. DEWATERING OF THE SHAFT INTERIOR MAY COMMENCE ONLY AFTER A MINIMUM OF SEVEN (7) DAYS CURING OF THE INVERT CONCRETE PLUG.

   g. SEAL ANY WATER LEAKAGES USING ADDITIONAL ANNULAR GROUTING.

   h. PROCEED WITH SHAFT EXCAVATION , PROVIDE ADDITIONAL SUPPORT SUCH AS RING BEAM WHERE APPLICABLE.

   i PLACE FINAL DRAINAGE STONE AND A CONCRETE BASE SLAB IN THE DRY AND ABOVE THE GROUT TREATED BOTTOM PLUG.

OPTION - 1

NOT FOR CONSTRUCTION

CITY OF LOS ANGELES • DEPARTMENT OF PUBLIC WORKS • BUREAU OF ENGINEERING

LA DPW ENGINEERING TRANSFORMING LOS ANGELES

| NO. | REVISIONS | DATE | BY |
|---|---|---|---|

CIP NO. AS-BID

REGISTERED PROFESSIONAL ENGINEER SEAN ZAHEDI No. C046372 Exp. 12/31/15 CIVIL STATE OF CALIFORNIA

| | | DATE |
|---|---|---|
| CITY ENGINEER | GARY LEE MOORE, P.E. | |
| LIC. NO. C-75974 | | 07-14 |
| | N | 07-14 |
| | | 07-14 |
| | | 07-14 |

DESIGN GROUP

ENGINEER: SEAN ZAHEDI/DARSHNA PATEL
DESIGNED BY: FRANCIS FONG
DRAWN BY: CAN CHOW, HIEP LAM
CHECKED BY: ABID CHOWDHRY, P.E.
APPROVED BY: BRAD JENSON, P.E.

VERTICAL CONTROL: NGVD29, 1985 ADJ
HORIZONTAL CONTROL: NAD83, EPOCH 1991.5

SHEET TITLE: CIRCULAR STEEL CASING SHAFT SUPPORT
PROJECT: VENICE DUAL FORCE MAIN
ADDRESS: MARINA DEL REY, CALIFORNIA

WORK ORDER NO. SZC11631

DRAWING NO. C-35

SHEET 41

REVISION DATES (DESIGN STAGE ONLY)

FILE: Q:\CAD DATA\SZCxxxxx\szc11631\civil\asbid\vdfmDc35-.dgn
DATE: 09-Jul-14 10:147/9/2014 10:15:24 AM

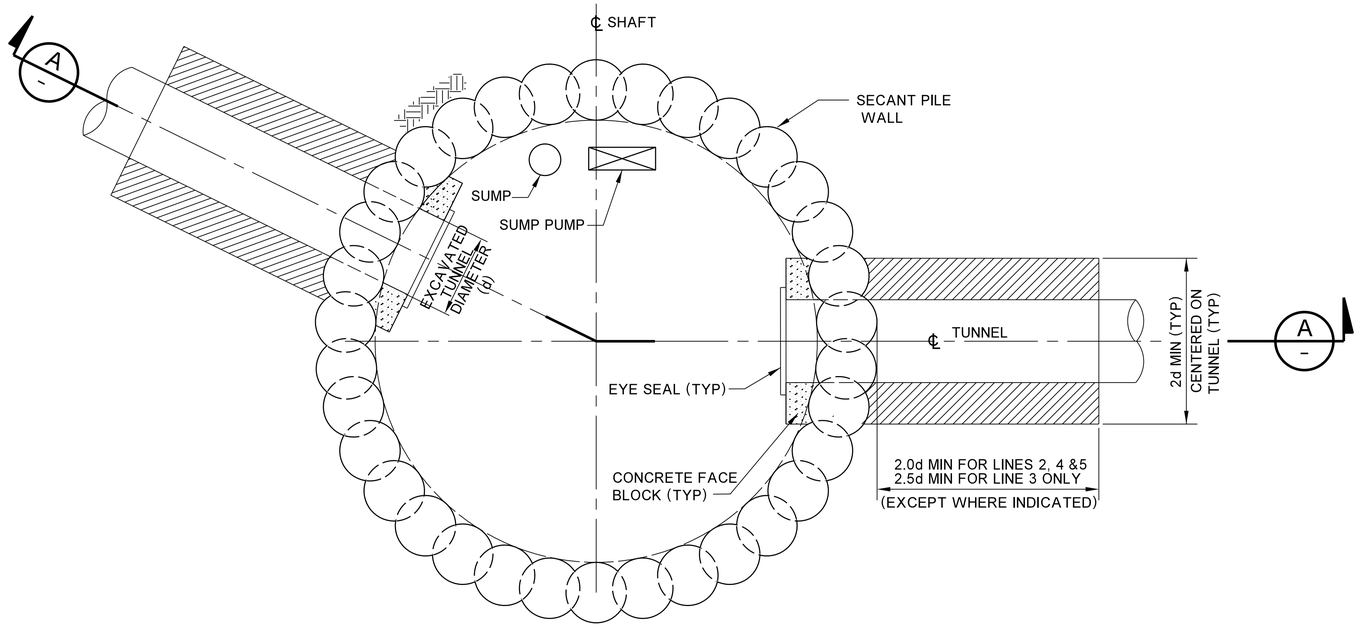


PLAN
NTS

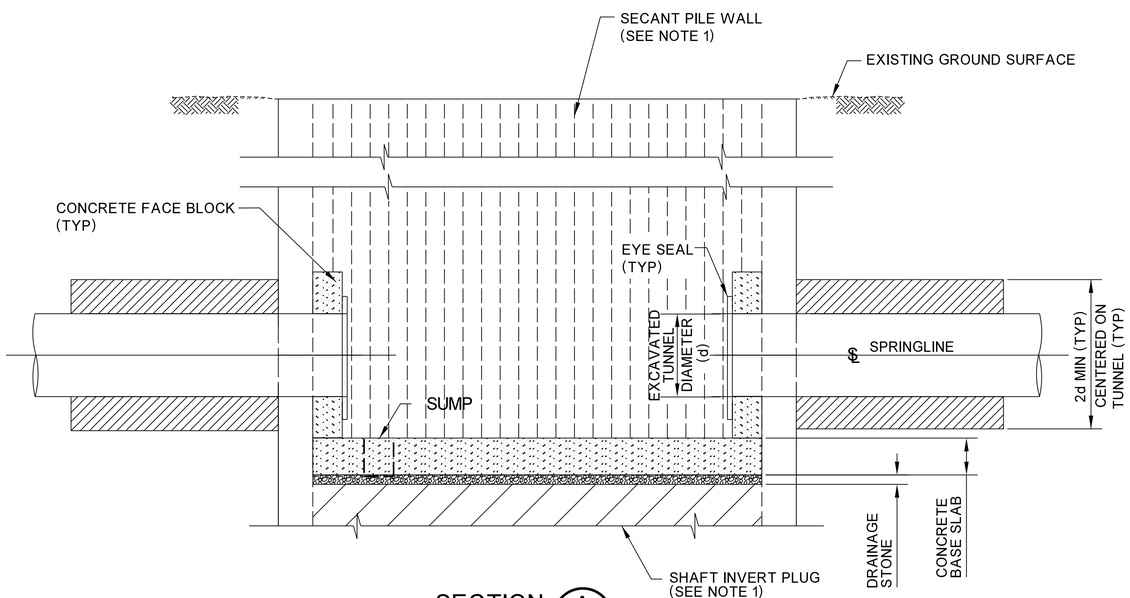


SECTION A
NTS

SECANT PILE WALL SHAFT SUPPORT

## LEGEND

GROUND IMPROVEMENT ZONE FOR SHAFT BREAK-IN AND BREAK-OUT (SEE NOTE 2)

## NOTES:

1. SHAFT SUPPORT AND INVERT DESIGN SHOWN ARE SCHEMATIC ONLY, REFER TO SPECIFICATIONS FOR DETAIL REQUIREMENTS.
2. REFER TO SPECIFICATIONS FOR GROUND IMPROVEMENT REQUIREMENTS AT SHAFT BREAK-IN AND BREAK-OUT.
3. INSIDE BRACING (IF REQUIRED) AND THRUST BLOCK NOT SHOWN FOR CLARITY.

OPTION - 2

NOT FOR CONSTRUCTION

CITY OF LOS ANGELES • DEPARTMENT OF PUBLIC WORKS • BUREAU OF ENGINEERING

LA DPW ENGINEERING TRANSFORMING LOS ANGELES

| NO. | REVISIONS | DATE | BY |
|---|---|---|---|

CIP NO. AS-BID

INDEX NO.

GARY LEE MOORE, P.E. — CITY ENGINEER

DESIGN GROUP

| | | DATE |
|---|---|---|
| ENGINEER: | SEAN ZAHEDI/DARSHNA PATEL LIC. NO. C-75974 | 07-14 |
| DESIGNED BY: | DARSHNA PATEL, CAN CHOW | 07-14 |
| DRAWN BY: | CAN CHOW, HIEP LAM | 07-14 |
| CHECKED BY: | ABID CHOWDHRY, P.E. | 07-14 |
| APPROVED BY: | BRAD JENSON, P.E. | 07-14 |

VERTICAL CONTROL: NGVD29, 1985 ADJ
HORIZONTAL CONTROL: NAD83, EPOCH 1991.5

SHEET TITLE: SECANT PILE WALL SHAFT SUPPORT

PROJECT: VENICE DUAL FORCE MAIN

ADDRESS: MARINA DEL REY, CALIFORNIA

WORK ORDER NO. SZC11631

DRAWING NO. C-36

SHEET 42

REVISION DATES (DESIGN STAGE ONLY)

FILE: Q:\CAD DATA\SZCxxxxx\szc11631\civil\asbid\vdfmDc36- SECANT PILED SUPPORT.dgn
DATE: 09-Jul-14 10:15

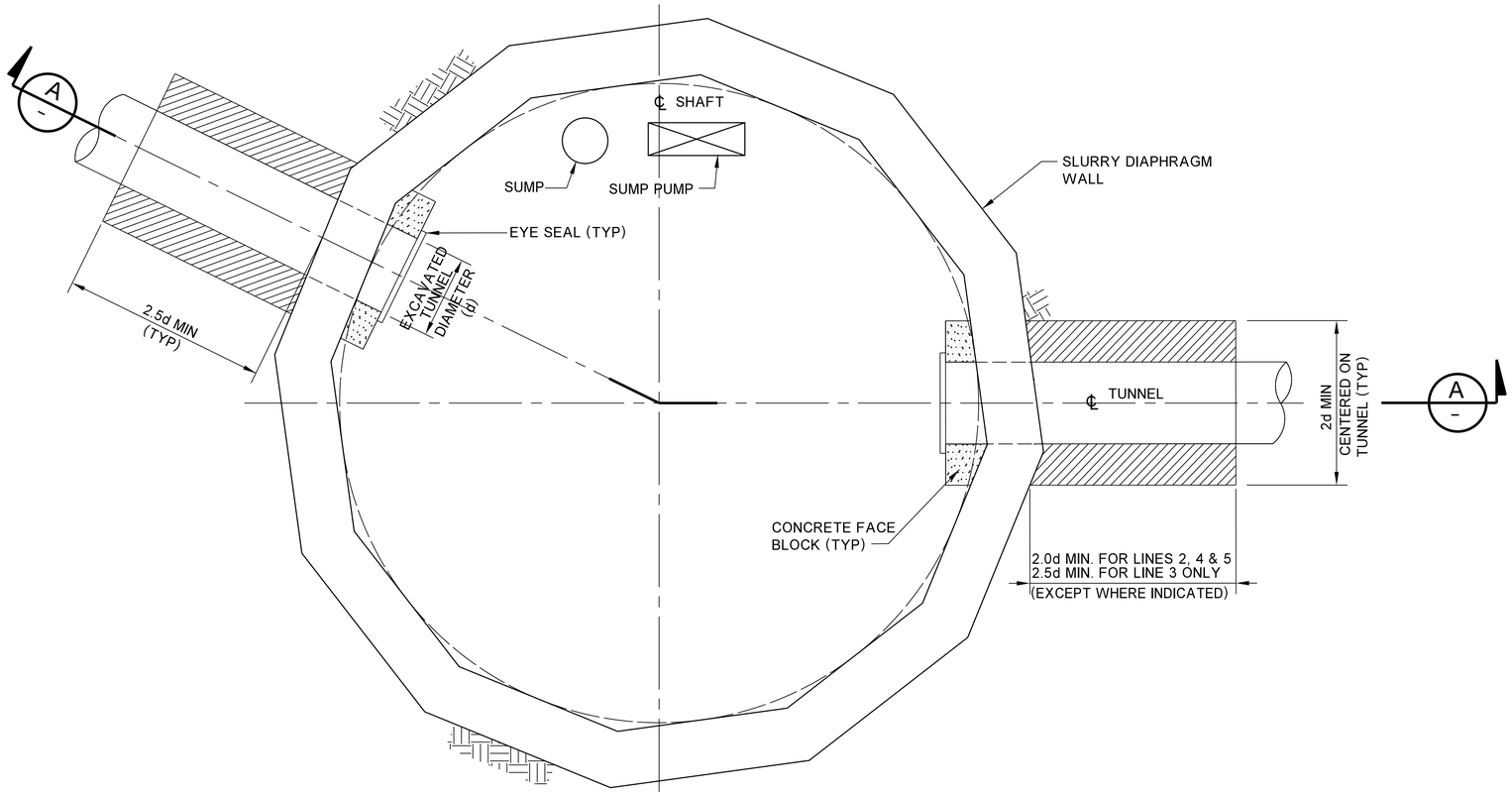


PLAN
NTS

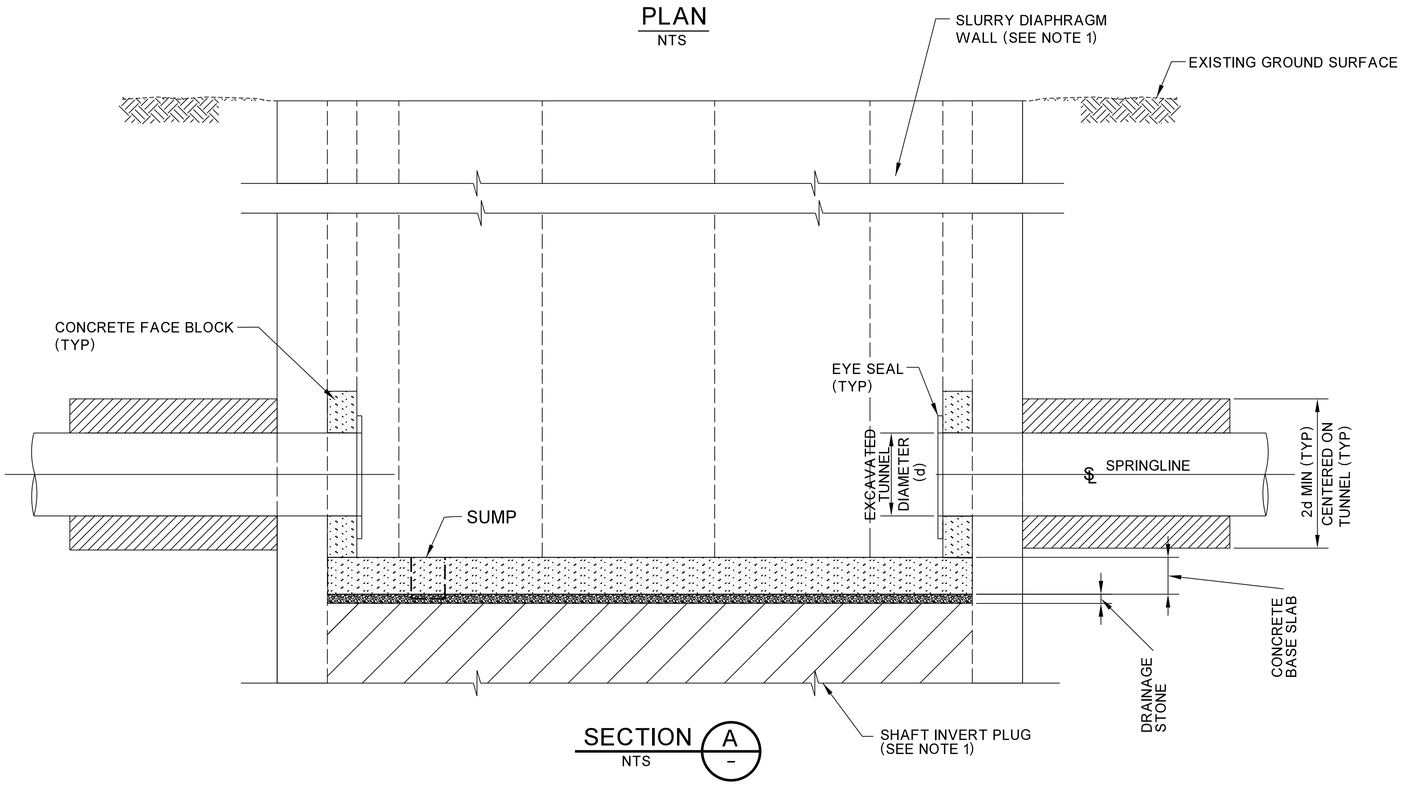


SECTION A
NTS

SLURRY DIAPHRAGM WALL SHAFT SUPPORT

## LEGEND

GROUND IMPROVEMENT ZONE FOR SHAFT BREAK-IN AND BREAK-OUT (SEE NOTE 2)

## NOTES:

1. SHAFT SUPPORT AND INVERT DESIGN SHOWN ARE SCHEMATIC ONLY, REFER TO SPECIFICATIONS FOR DETAIL REQUIREMENTS.
2. REFER TO SPECIFICATIONS FOR GROUND IMPROVEMENT REQUIREMENTS AT SHAFT BREAK-IN AND BREAK-OUT.
3. INSIDE BRACING (IF REQUIRED) AND THRUST BLOCK NOT SHOWN FOR CLARITY.

OPTION -3

NOT FOR CONSTRUCTION

CITY OF LOS ANGELES • DEPARTMENT OF PUBLIC WORKS • BUREAU OF ENGINEERING

LA DPW ENGINEERING TRANSFORMING LOS ANGELES

| NO. | REVISIONS | DATE | BY: |
|---|---|---|---|

CIP NO. AS-BID

INDEX NO.

GARY LEE MOORE, P.E. — CITY ENGINEER

| DESIGN GROUP | | DATE |
|---|---|---|
| ENGINEER: | SEAN ZAHEDI/DARSHNA PATEL LIC. NO. C-75974 | 07-14 |
| DESIGNED BY: | DARSHNA PATEL, CAN CHOW | 07-14 |
| DRAWN BY: | CAN CHOW, HIEP LAM | 07-14 |
| CHECKED BY: | ABID CHOWDHRY, P.E. | 07-14 |
| APPROVED BY: | BRAD JENSON, P.E. | 07-14 |

VERTICAL CONTROL: NGVD29, 1985 ADJ
HORIZONTAL CONTROL: NAD83, EPOCH 1991.5

SHEET TITLE: SLURRY DIAPHRAGM WALL SHAFT SUPPORT
PROJECT: VENICE DUAL FORCE MAIN
ADDRESS: MARINA DEL REY, CALIFORNIA

WORK ORDER NO. SZC11631

DRAWING NO. C-37

SHEET 43

REVISION DATES (DESIGN STAGE ONLY)

FILE: Q:\CAD DATA\SZCxxxxx\szc11631\civil\asbid\vdfmDc37- SLURRY WALL SUPPORT.dgn
DATE: 09-Jul-14 10:16

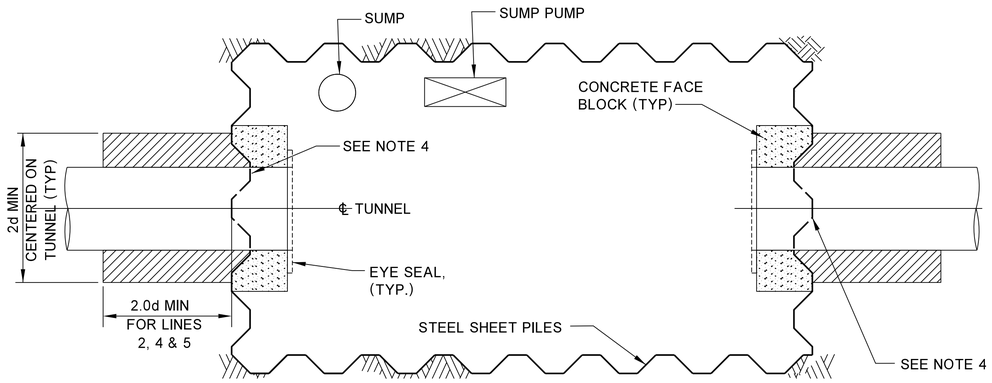


PLAN
NTS

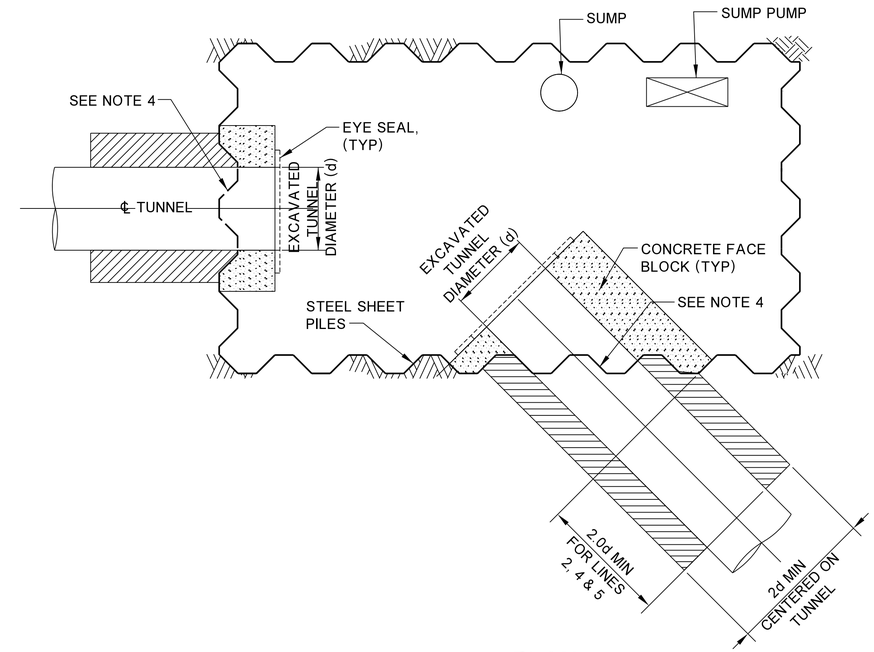


PLAN
NTS

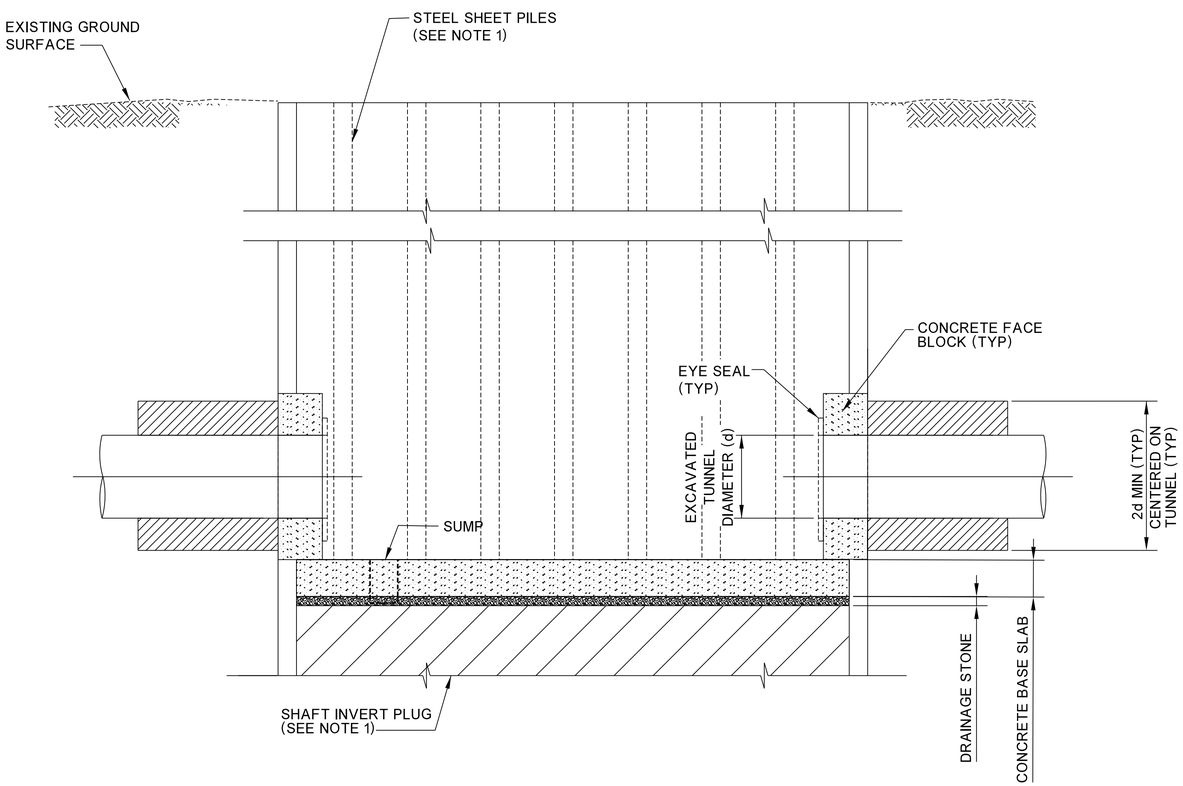


ELEVATION
NTS

STEEL SHEET PILE WALL
SHAFT SUPPORT

## LEGEND

GROUND IMPROVEMENT ZONE FOR SHAFT BREAK-IN AND BREAK-OUT (SEE NOTE 2)

## NOTES:

1. SHAFT SUPPORT AND INVERT DESIGN SHOWN ARE SCHEMATIC ONLY, REFER TO SPECIFICATIONS FOR DETAIL REQUIREMENTS.
2. REFER TO SPECIFICATIONS FOR GROUND IMPROVEMENT REQUIREMENTS AT SHAFT BREAK-IN AND BREAK-OUT.
3. INSIDE BRACING AND THRUST BLOCK NOT SHOWN FOR CLARITY.
4. CUT OPENING IN STEEL SHEETING WALL FOR MACHINE LAUNCHING OR RECOVERY OPERATION.

OPTION - 4

NOT FOR CONSTRUCTION

CITY OF LOS ANGELES • DEPARTMENT OF PUBLIC WORKS • BUREAU OF ENGINEERING

LA DPW ENGINEERING TRANSFORMING LOS ANGELES

| NO. | REVISIONS | DATE | BY |
|---|---|---|---|

CIP NO. AS-BID

INDEX NO.

CITY ENGINEER: GARY LEE MOORE, P.E.

| DESIGN GROUP | | DATE |
|---|---|---|
| ENGINEER: | SEAN ZAHEDI/DARSHNA PATEL LIC. NO. C-75974 | 07-14 |
| DESIGNED BY: | DARSHNA PATEL, CAN CHOW | 07-14 |
| DRAWN BY: | CAN CHOW, HIEP LAM | 07-14 |
| CHECKED BY: | ABID CHOWDHRY, P.E. | 07-14 |
| APPROVED BY: | BRAD JENSON, P.E. | 07-14 |

VERTICAL CONTROL: NGVD29, 1985 ADJ
HORIZONTAL CONTROL: NAD83, EPOCH 1991.5

SHEET TITLE: STEEL SHEET PILE WALL SHAFT SUPPORT

PROJECT: VENICE DUAL FORCE MAIN

ADDRESS: MARINA DEL REY, CALIFORNIA

WORK ORDER NO. SZC11631

DRAWING NO. C-38

SHEET 44

REVISION DATES (DESIGN STAGE ONLY)

FILE: Q:\CAD DATA\SZCxxxxx\szc11631\civil\asbid\vdfmDc38- STEEL PILE SUPPORT.dgn
DATE: 09-Jul-14 10:17

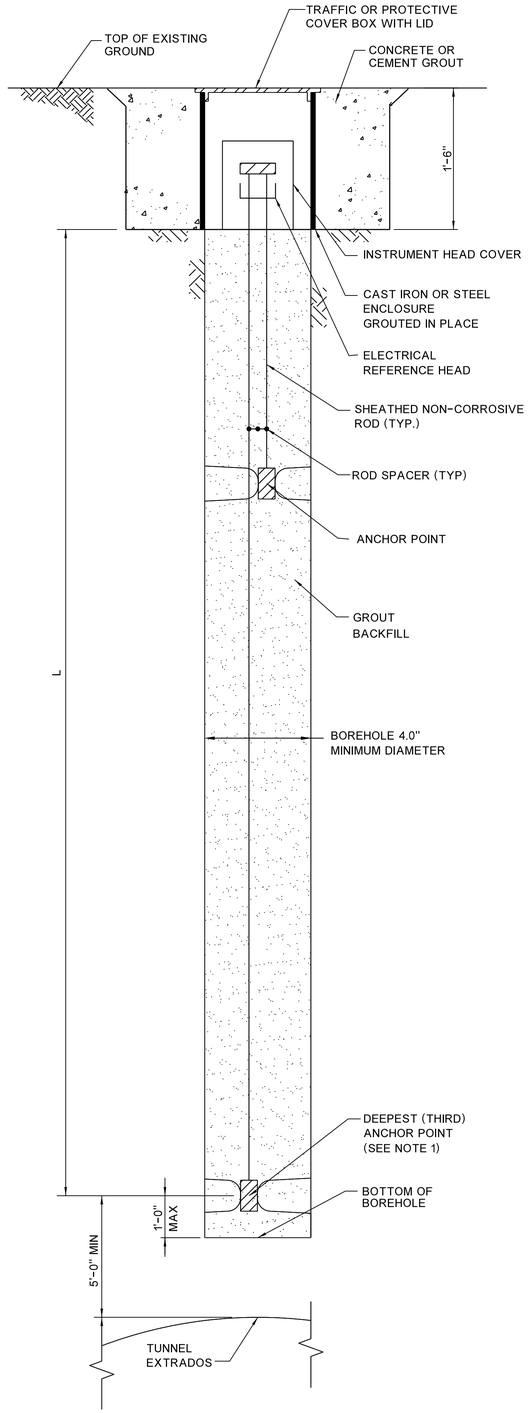


## MULTI-POINT ROD EXTENSOMETER (MPBX)

NTS

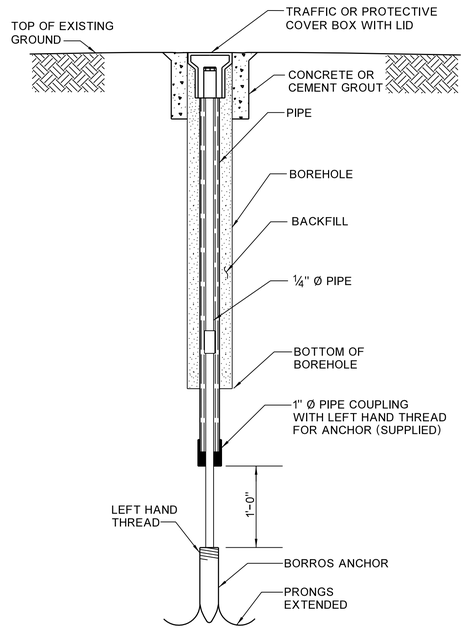


## BORROS SETTLEMENT POINTS

NTS

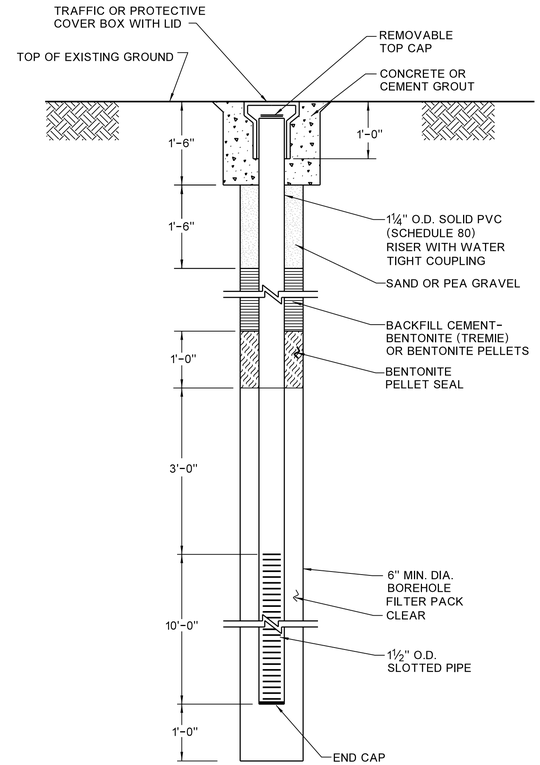


## PIEZOMETER

NTS

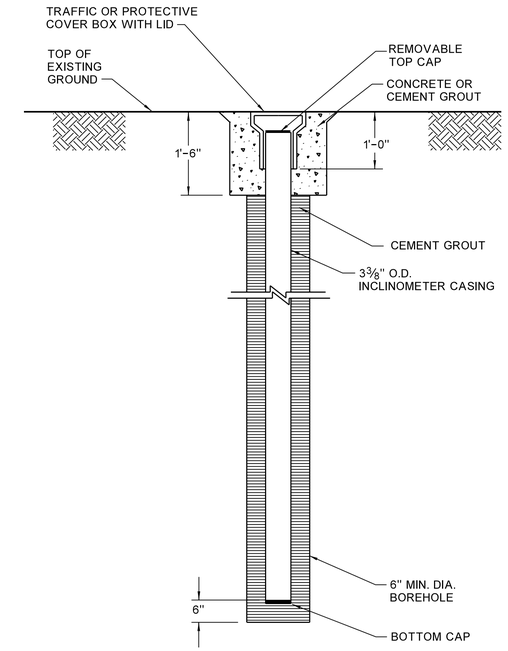


## INCLINOMETER

NTS

## NOTES:

1. SCHEMATC DESIGN OF THESE VARIOUS GEOTECHNICAL INSTRUMENTS ARE FOR CONTRACTOR'S INFORMATION ONLY. REFER TO SPECIFICATION 02496 FOR THEIR PROPOSED LOCATIONS, DETAILS AND REQUIREMENTS.

CITY OF LOS ANGELES • DEPARTMENT OF PUBLIC WORKS • BUREAU OF ENGINEERING

LA DPW ENGINEERING TRANSFORMING LOS ANGELES

| NO. | REVISIONS | DATE | BY: |
|---|---|---|---|

CIP NO. AS-BID

INDEX NO.

GARY LEE MOORE, P.E. — CITY ENGINEER — DATE

ENGINEER: SEAN ZAHEDI/DARSHNA PATEL LIC. NO. C-75974 07-14

DESIGNED BY: DARSHNA PATEL, CAN CHOW 07-14

DRAWN BY: CAN CHOW, HIEP LAM 07-14

CHECKED BY: ABID CHOWDHRY, P.E. 07-14

APPROVED BY: BRAD JENSON, P.E. 07-14

VERTICAL CONTROL: NGVD29, 1985 ADJ

HORIZONTAL CONTROL: NAD83, EPOCH 1991.5

SHEET TITLE: GEOTECHNICAL INSTRUMENTATION

PROJECT: VENICE DUAL FORCE MAIN

ADDRESS: MARINA DEL REY, CALIFORNIA

WORK ORDER NO. SZC11631

DRAWING NO. C-39

SHEET 45

NOT FOR CONSTRUCTION

REVISION DATES (DESIGN STAGE ONLY)

FILE: Q:\CAD DATA\SZCxxxxx\szc11631\civil\asbid\vdfmDc39- geo_instm.dgn
DATE: 09-Jul-14 10:18

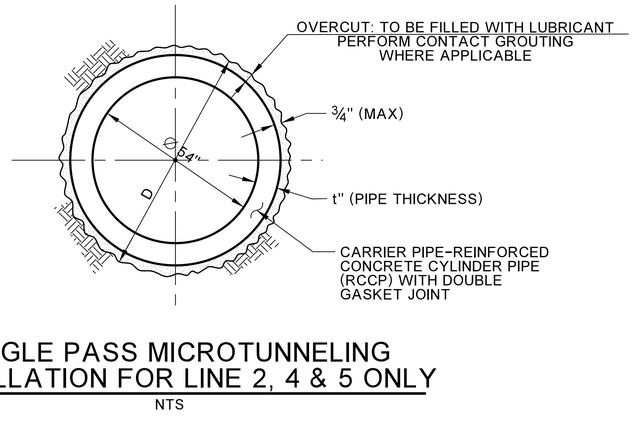


## SINGLE PASS MICROTUNNELING INSTALLATION FOR LINE 2, 4 & 5 ONLY

NTS

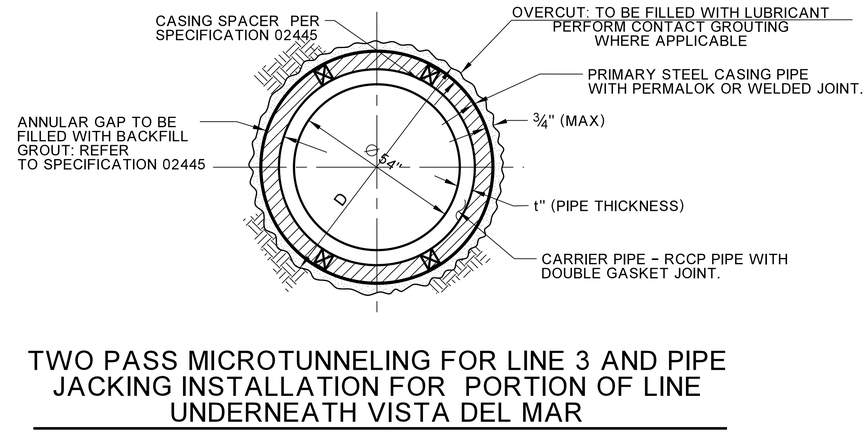


## TWO PASS MICROTUNNELING FOR LINE 3 AND PIPE JACKING INSTALLATION FOR PORTION OF LINE UNDERNEATH VISTA DEL MAR

NTS

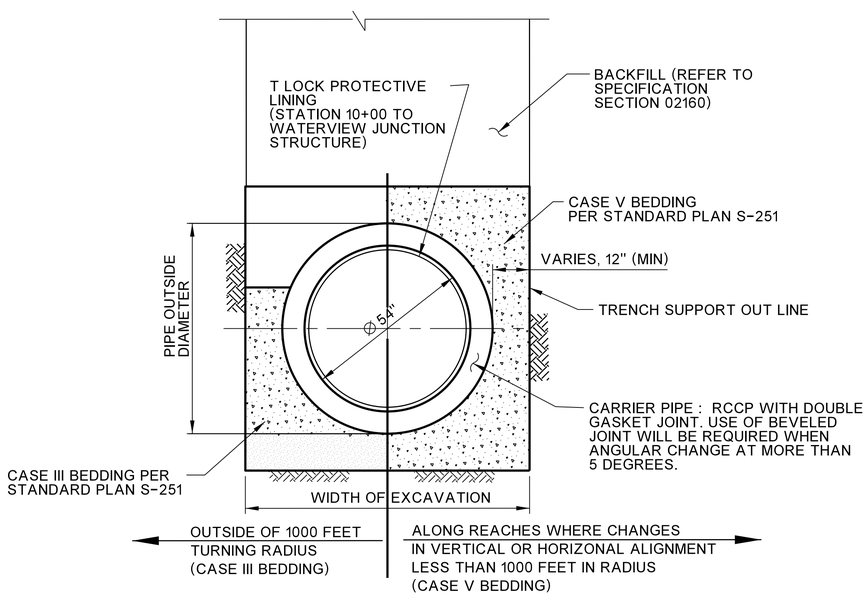


## OPEN TRENCH EXCAVATION FOR LINE 1

NTS

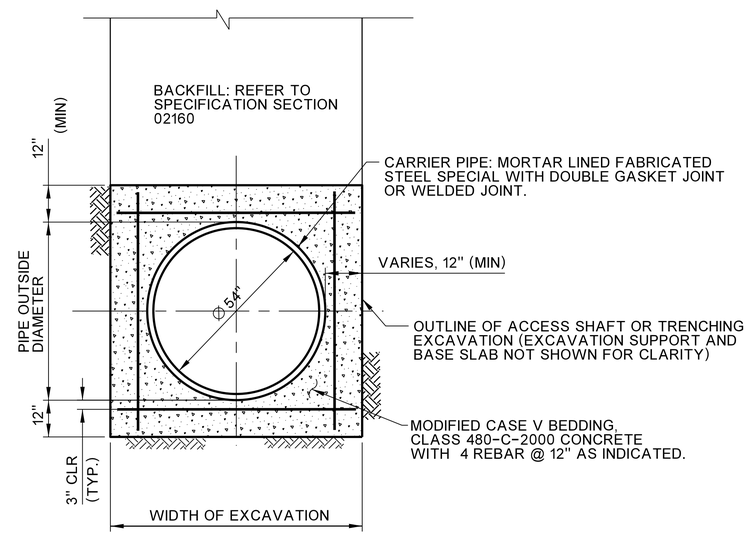


## STEEL PIPE - FABRICATED SPECIALS FOR ALL REACHES

NTS

NOTES:

1. PERFORM CONTACT GROUTING IN ACCORDANCE WITH THE SPECIFICATION 02441.
2. REFER TO THE SPECIFICATIONS FOR CARRIER PIPE, JOINT TREATMENT, LUBRICATION PORTS, SPACERS AND OTHER REQUIREMENTS.
3. SEE DRAWING C-42 FOR RCCP PIPE DETAILS.

NOT FOR CONSTRUCTION

LA DPW ENGINEERING TRANSFORMING LOS ANGELES

| NO. | REVISIONS | DATE | BY: |
|---|---|---|---|

CIP NO. AS-BID

REGISTERED PROFESSIONAL ENGINEER SEAN ZAHEDI No. C046372 Exp. 12/31/15 CIVIL STATE OF CALIFORNIA

CITY OF LOS ANGELES • DEPARTMENT OF PUBLIC WORKS • BUREAU OF ENGINEERING

GARY LEE MOORE, P.E.
CITY ENGINEER

DESIGN GROUP

| | | DATE |
|---|---|---|
| ENGINEER: | SEAN ZAHEDI//DARSHNA PATEL LIC. NO. C-75974 | 07-14 |
| DESIGNED BY: | FRANCIS FONG | 07-14 |
| DRAWN BY: | CAN CHOW, HIEP LAM | 07-14 |
| CHECKED BY: | ABID CHOWDHRY, P.E. | 07-14 |
| APPROVED BY: | BRAD JENSON, P.E. | 07-14 |

VERTICAL CONTROL: NGVD29, 1985 ADJ
HORIZONTAL CONTROL: NAD83, EPOCH 1991.5

SHEET TITLE: PIPE INSTALLATION SECTIONS
PROJECT: VENICE DUAL FORCE MAIN
ADDRESS: MARINA DEL REY, CALIFORNIA

WORK ORDER NO. SZC11631

DRAWING NO. C-40

SHEET 46

REVISION DATES (DESIGN STAGE ONLY)

FILE: Q:\CAD DATA\SZCxxxxx\szc11631\civil\asbld\vdfmDc40-.dgn
DATE: 09-Jul-14 10:19

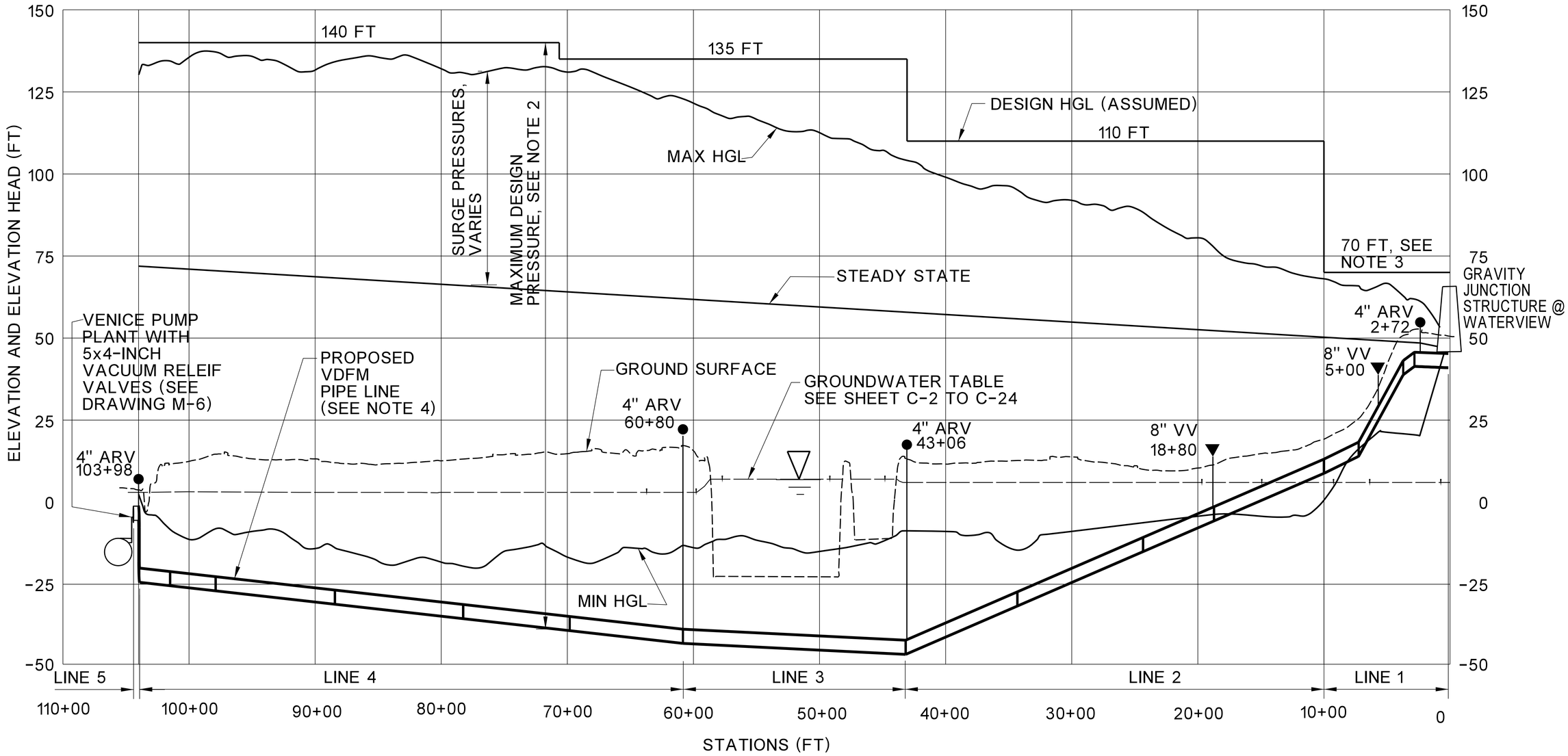


LEGEND:

ARV= AIR RELEASE VALVE (SEE DRAWING C-33)

VV = VACUUM VALVE (SEE DRAWING C-33)

NOTES:

1. HYDRAULIC GRADE LINE (HGL) FOR MAXIMUM, STEADY STATE, AND MINIMUM CONDITIONS ARE TAKEN FROM "VENICE PUMPING PLANT DUAL FORCE MAIN PROJECT - PRESSURE SURGE ANALYSIS", PREPARED BY FLOW SCIENCE, INC., MARCH 12, 2009. MINIMUM HGL CURVE IS MODIFIED PER THE REVISED LOCATIONS OF THE VACUUM RELIEF VALVES.
2. THE MAX, STEADY STATE AND MIN HGL REPRESENTS THE INTERNAL PRESSURE DISTRIBUTION ALONG THE VDFM ALIGNMENT DURING PUMPS START UP, NORMAL OPERATION AND SUDDEN LOSS OF POWER CONDITIONS. THE CONTRACTOR SHALL DESIGN THE CARRIER PIPE TO WITHSTAND THE MAXIMUM DESIGN PRESSURE UNDER THE SURGE CONDITION REPRESENTS BY THE "DESIGN HGL" CURVE.
3. END OF LINE1 NEAR WATERVIEW STRUCTURE WILL BE SUBJECTED TO INTERNAL PRESSURE WHEN FLOW IS BEING DIVERTED INTO THE TEMPORARY BYPASS AS INDICATED ON SHEET C-28.
4. THE GROUND AND VDFM PROFILES AS SHOWN ARE APPROXIMATED, REFER TO SHEET C-2 TO C-24 FOR ACTUAL INVERT ELEVATION.

LA DPW ENGINEERING TRANSFORMING LOS ANGELES

BUREAU OF ENGINEERING

| NO. | REVISIONS | DATE | BY: |
|---|---|---|---|

CIP NO. AS-BID

INDEX NO.

CITY OF LOS ANGELES • DEPARTMENT OF PUBLIC WORKS

GARY LEE MOORE, P.E. CITY ENGINEER

DESIGN GROUP

| | | DATE |
|---|---|---|
| ENGINEER: | SEAN ZAHEDI/DARSHNA PATEL LIC. NO. C-75974 | 07-14 |
| DESIGNED BY: | DARSHNA PATEL, CAN CHOW | 07-14 |
| DRAWN BY: | CAN CHOW, HIEP LAM | 07-14 |
| CHECKED BY: | ABID CHOWDHRY, P.E. | 07-14 |
| APPROVED BY: | BRAD JENSON, P.E. | 07-14 |

VERTICAL CONTROL: NGVD29, 1985 ADJ.
HORIZONTAL CONTROL: NAD83, EPOCH 1991.5

SHEET TITLE: HYDRAULIC GRADE LINE GRAPHS

PROJECT: VENICE DUAL FORCE MAIN

ADDRESS: MARINA DEL REY, CALIFORNIA

WORK ORDER NO. SZC11631

DRAWING NO. C-41

SHEET 47

NOT FOR CONSTRUCTION

REVISION DATES (DESIGN STAGE ONLY)

FILE: Q:\CAD DATA\SZCxxxxx\szc11631\civil\asbid\vdfmDc41_HGL_graph.dgn
DATE: 09-Jul-14 10:20

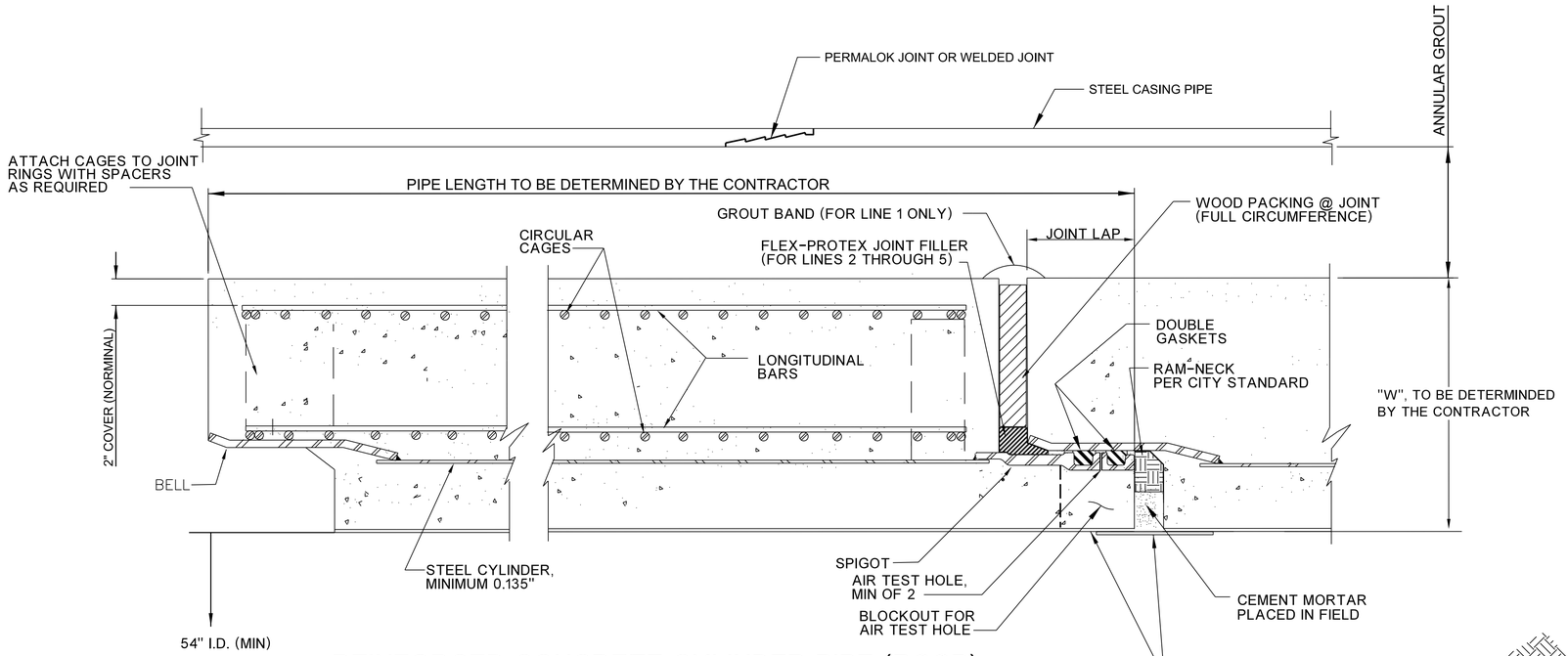


## REINFORCED CONCRETE CYLINDER PIPE (RCCP)

NTS

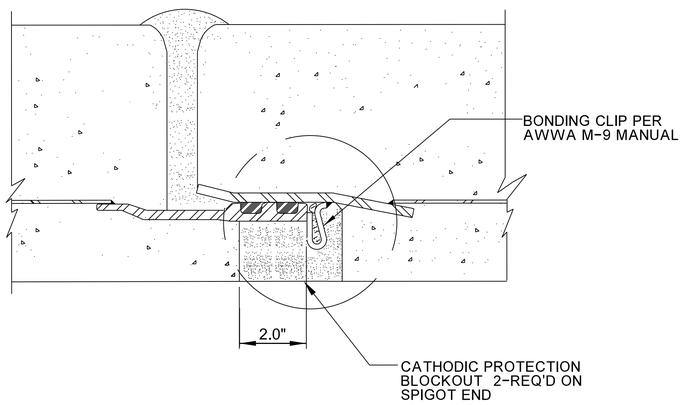


## CATHODIC PROTECTION BONDING CLIP

NTS

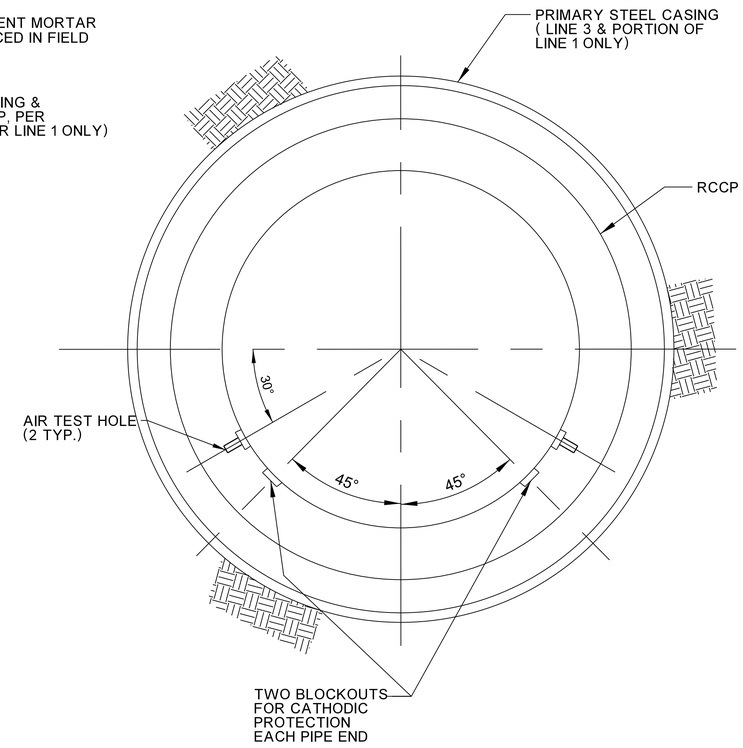


NOTE:

1. DESIGN THE RCCP CARRIER PIPE PER LOADING CONDITION DESCRIBED ON C-41 AND PER REQUIREMENTS OF THE SPECIFICATION 02620.
2. EPOXY COAT JOINT RINGS WITH ZINC RICH PRIMER FOR ALL EXPOSED STEEL RING JOINT
3. USING AIR TEST HOLE PROVIDED ON JOINT, AIR PRESSURE SHALL BE GRADUALLY APPLIED UNTIL A PRESSURE OF 40 PSI IS REACHED. IF THE AIR PRESSURE DROP IS LESS THAN 1 PSI IN 5 SECONDS, THEN THE JOINT IS ACCEPTABLE. THE AIR PRESSURE APPARATUS SHALL BE EQUIPPED WITH AN AIR PRESSURE RELIEF VALVE SET FOR 10 PSI GREATER THAN THE AIR PRESSURE REQUIRED. UPON COMPLETION OF JOINT TEST, PLUG BOTH TEST HOLES AND FILL THE BLOCKOUT WITH MORTAR AND TROWEL SMOOTH.
4. IF JOINT FAILS, THE JOINT SHALL BE EXAMINED AND SOURCES OF LEAKAGES BE DETERMINED AND REPAIRED. RE-TEST AFTER CORRECTIONS.
5. PLACE BONDING CLIPS IN INTERIOR JOINT RECESS AS SHOWN. WELD CLIPS TO BELL AND SPIGOT USING FILLET WELDS. REMOVE SLAG FROM WELD AND FILL RECESS WITH CEMENT MORTAR COVERING ALL EXPOSED STEEL.

CITY OF LOS ANGELES • DEPARTMENT OF PUBLIC WORKS • BUREAU OF ENGINEERING

LA DPW ENGINEERING TRANSFORMING LOS ANGELES

NOT FOR CONSTRUCTION

| NO. | REVISIONS | DATE | BY |
|---|---|---|---|

CIP NO. AS-BID

CITY ENGINEER: GARY LEE MOORE, P.E. — DATE

DESIGN GROUP

ENGINEER: SEAN ZAHEDI/DARSHNA PATEL LIC. NO. C-75974 — 07-14

DESIGNED BY: DARSHNA PATE — V — 07-14

DRAWN BY: CAN CHOW, HIEP LAM — 07-14

CHECKED BY: ABID CHOWDHRY, P.E. — 07-14

APPROVED BY: BRAD JENSON, P.E. — 07-14

VERTICAL CONTROL: NGVD29, 1985 ADJ.
HORIZONTAL CONTROL: NAD83, EPOCH 1991.5

SHEET TITLE: CARRIER PIPE, REINFORCED CONCRETE CYLINDRICAL PIPE

PROJECT: VENICE DUAL FORCE MAIN

ADDRESS: MARINA DEL REY, CALIFORNIA

WORK ORDER NO. SZC11631

DRAWING NO. C-42

SHEET 48

REVISION DATES (DESIGN STAGE ONLY)

FILE: Q:\CAD DATA\SZCxxxxx\szc11631\civil\asbid\vdfmDc42~.dgn
DATE: 09-Jul-14 10:20

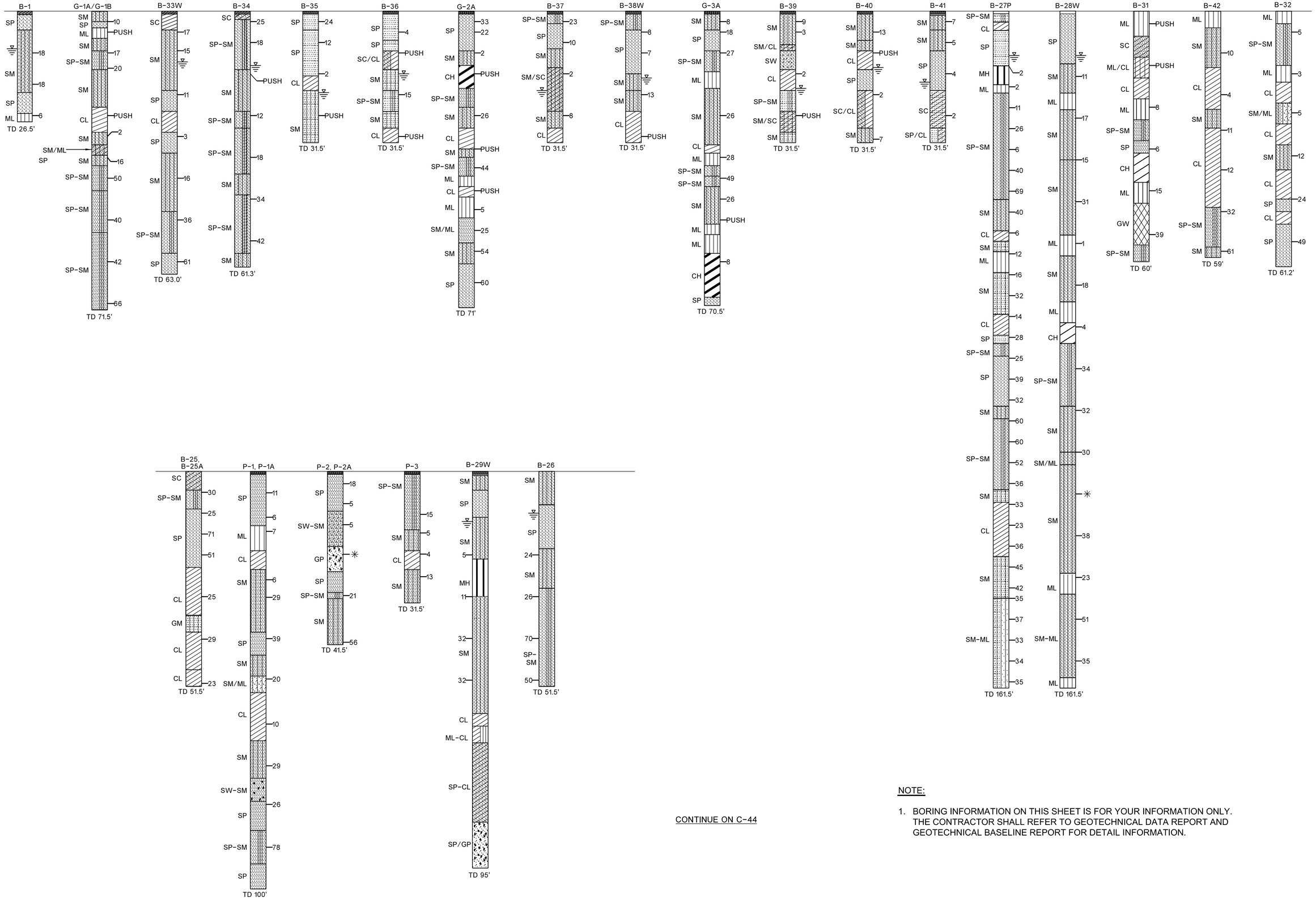


CONTINUE ON C-44

NOTE:

1. BORING INFORMATION ON THIS SHEET IS FOR YOUR INFORMATION ONLY. THE CONTRACTOR SHALL REFER TO GEOTECHNICAL DATA REPORT AND GEOTECHNICAL BASELINE REPORT FOR DETAIL INFORMATION.

CITY OF LOS ANGELES • DEPARTMENT OF PUBLIC WORKS • BUREAU OF ENGINEERING

LA DPW ENGINEERING TRANSFORMING LOS ANGELES

NOT FOR CONSTRUCTION

| NO. | REVISIONS | DATE | BY: |
|---|---|---|---|

CIP NO. AS-BID

INDEX NO.

CITY ENGINEER: GARY LEE MOORE, P.E.

| DESIGN GROUP | | DATE |
|---|---|---|
| ENGINEER: | SEAN ZAHEDI/DARSHNA PATEL LIC. NO. C-75974 | 07-14 |
| DESIGNED BY: | DARSHNA PATEL, CAN CHOW | 07-14 |
| DRAWN BY: | CAN CHOW, HIEP LAM | 07-14 |
| CHECKED BY: | ABID CHOWDHRY, P.E. | 07-14 |
| APPROVED BY: | BRAD JENSON, P.E. | 07-14 |

VERTICAL CONTROL: NGVD29, 1985 ADJ
HORIZONTAL CONTROL: NAD83, EPOCH 1991.5

SHEET TITLE: BORING LOGS

PROJECT: VENICE DUAL FORCE MAIN

ADDRESS: MARINA DEL REY, CALIFORNIA

WORK ORDER NO. SZC11631

DRAWING NO. C-43

SHEET 49

REVISION DATES (DESIGN STAGE ONLY)

FILE: Q:\CAD DATA\SZCxxxxx\szc11631\civil\asbld\vdfmDc43-.dgn
DATE: 09-Jul-14 10:21

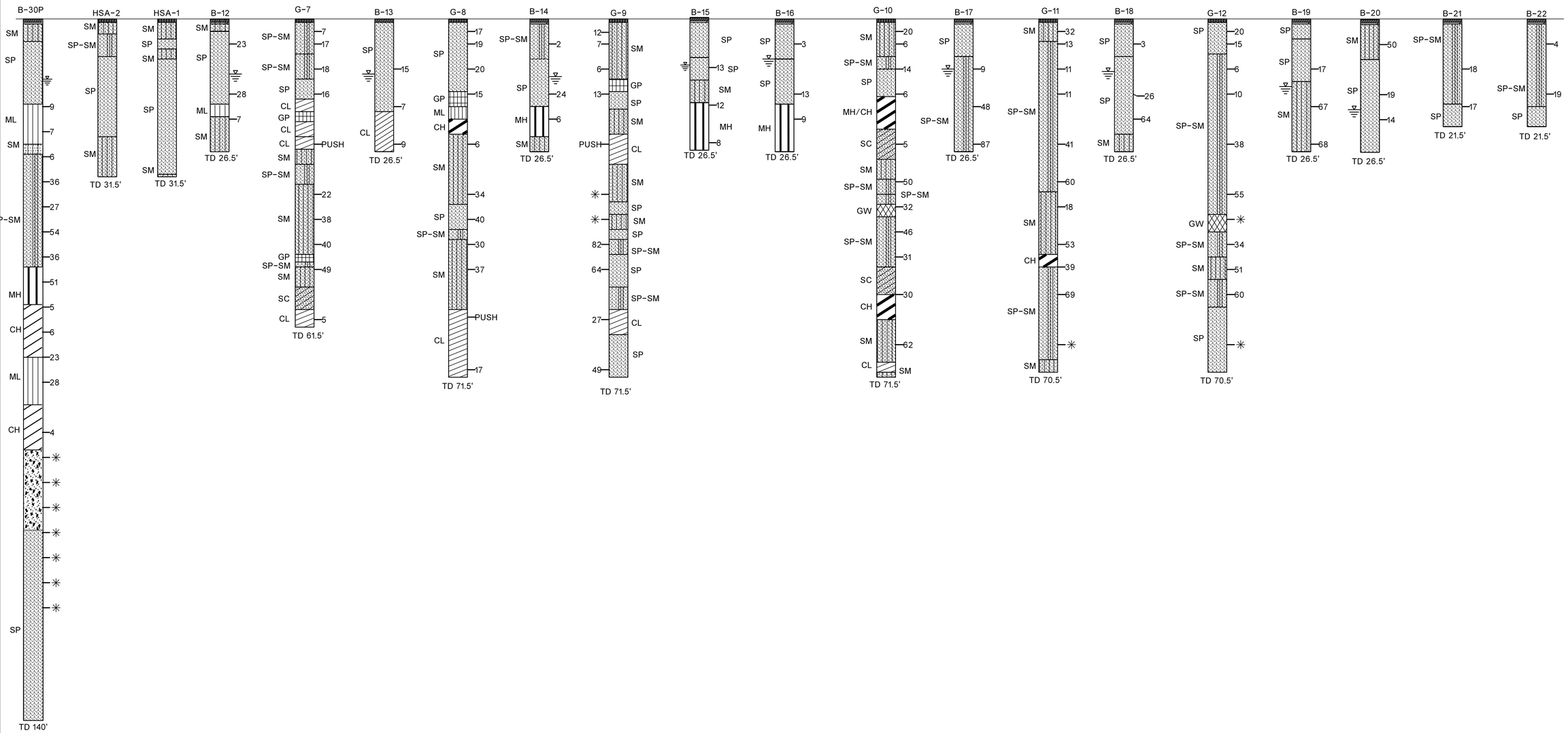


NOTE:

1. BORING INFORMATION ON THIS SHEET IS FOR YOUR INFORMATION ONLY. THE CONTRACTOR SHALL REFER TO GEOTECHNICAL DATA REPORT AND GEOTECHNICAL BASELINE REPORT FOR DETAIL INFORMATION.

NOT FOR CONSTRUCTION

CITY OF LOS ANGELES • DEPARTMENT OF PUBLIC WORKS • BUREAU OF ENGINEERING

LA DPW ENGINEERING TRANSFORMING LOS ANGELES

| NO. | REVISIONS | DATE | BY: |
|---|---|---|---|

CIP NO. AS-BID

INDEX NO.

CITY ENGINEER: GARY LEE MOORE, P.E.

| DESIGN GROUP | | DATE |
|---|---|---|
| ENGINEER: | SEAN ZAHEDI/DARSHNA PATEL LIC. NO. C-75974 | 07-14 |
| DESIGNED BY: | DARSHNA PATEL, CAN CHOW | 07-14 |
| DRAWN BY: | CAN CHOW, HIEP LAM | 07-14 |
| CHECKED BY: | ABID CHOWDHRY, P.E. | 07-14 |
| APPROVED BY: | BRAD JENSON, P.E. | 07-14 |

VERTICAL CONTROL: NGVD29, 1985 ADJ
HORIZONTAL CONTROL: NAD83, EPOCH 1991.5

SHEET TITLE: BORING LOGS

PROJECT: VENICE DUAL FORCE MAIN

ADDRESS: MARINA DEL REY, CALIFORNIA

WORK ORDER NO. SZC11631

DRAWING NO. C-44

SHEET 50

REVISION DATES (DESIGN STAGE ONLY)

FILE: Q:\CAD DATA\SZCxxxxx\szc11631\civil\asbid\vdfmDc44-.dgn
DATE: 09-Jul-14 10:22

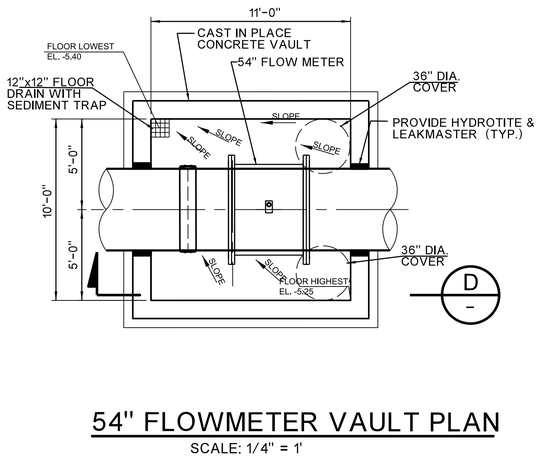


## 54" FLOWMETER VAULT PLAN

SCALE: 1/4" = 1'

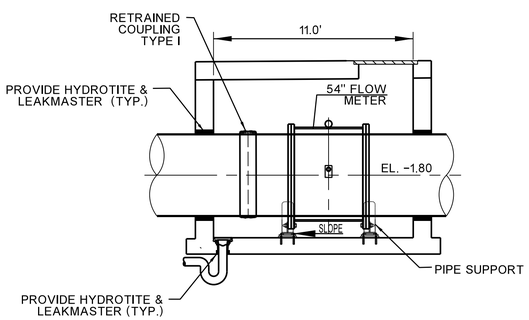


## D/- 54" FLOWMETER VAULT - SECTION

SCALE: 1/4" = 1'

NOTE:
1. ALL P-TRAPS WILL ENCASE IN CONCRETE WHEN BACKFILL.

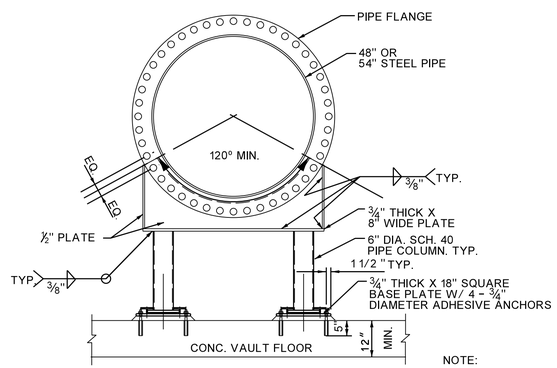


## ELEVATION

NOT TO SCALE

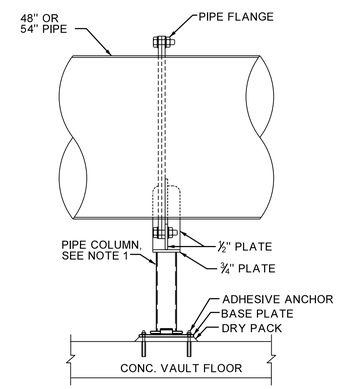


NOTE:
1. CUT PIPE COLUMN TO CORRECT HEIGHT IN THE FIELD

## SIDE VIEW

NOT TO SCALE

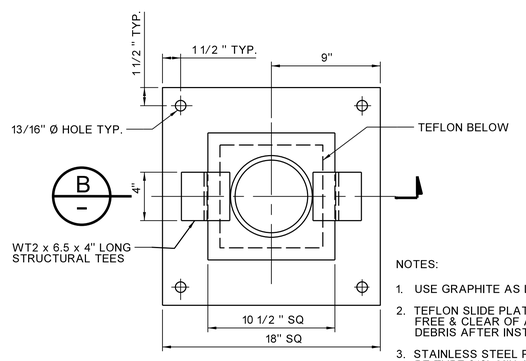


## PLAN

NOT TO SCALE

NOTES:
1. USE GRAPHITE AS LUBRICANT
2. TEFLON SLIDE PLATE SHALL BE FREE & CLEAR OF ALL WELD SLAG DEBRIS AFTER INSTALLATION.
3. STAINLESS STEEL PLATES SHALL BE TYPE 316L MIN. YIELD STRENGTH SHALL BE 30 KSI.

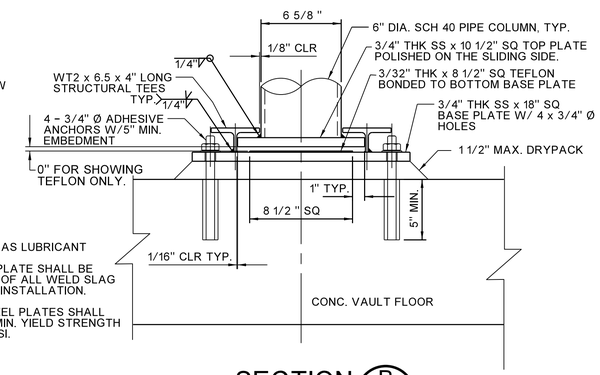


## SECTION B/-

NOT TO SCALE

## PIPE SUPPORTS

NOT TO SCALE

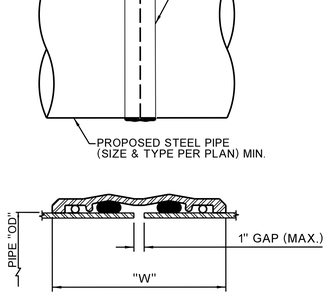


## RESTAINED COUPLING TYPE I

NOT TO SCALE

REVISION DATES (DESIGN STAGE ONLY)

CITY OF LOS ANGELES • DEPARTMENT OF PUBLIC WORKS • BUREAU OF ENGINEERING

LA DPW ENGINEERING TRANSFORMING LOS ANGELES

| NO. | REVISIONS | DATE | BY: |
|---|---|---|---|

CIP NO. AS-BID

NOT FOR CONSTRUCTION

CITY ENGINEER: GARY LEE MOORE, P.E.

DESIGN GROUP

| | | DATE |
|---|---|---|
| ENGINEER: | SEAN ZAHEDI/DARSHNA PATEL LIC. NO. C-75974 | 07-14 |
| DESIGNED BY: | DARSHNA PATEL, CAN CHOW | 07-14 |
| DRAWN BY: | CAN CHOW, HIEP LAM | 07-14 |
| CHECKED BY: | ABID CHOWDHRY, P.E. | 07-14 |
| APPROVED BY: | BRAD JENSON, P.E. | 07-14 |

VERTICAL CONTROL: NGVD29, 1985 ADJ.
HORIZONTAL CONTROL: NAD83, EPOCH 1991.5

SHEET TITLE: 54" FLOWMETER VAULT & PIPE SUPPORT

PROJECT: VENICE DUAL FORCE MAIN

ADDRESS: MARINA DEL REY, CALIFORNIA

WORK ORDER NO. SZC11631

DRAWING NO. C-45

SHEET

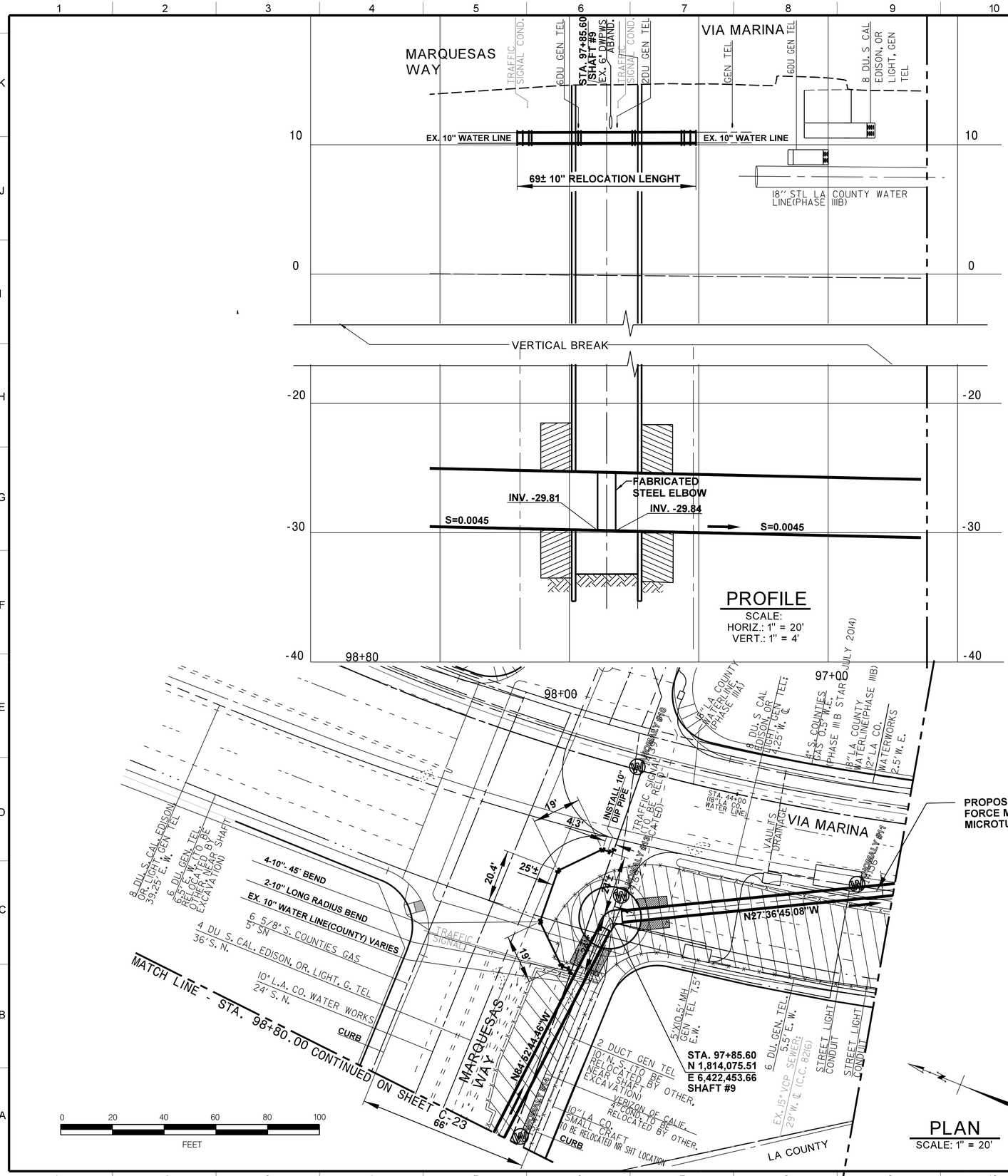


LEGEND

GROUND TREATMENT

NOT FOR CONSTRUCTION

CITY OF LOS ANGELES • DEPARTMENT OF PUBLIC WORKS • BUREAU OF ENGINEERING

LA DPW ENGINEERING TRANSFORMING LOS ANGELES

| NO. | REVISIONS | DATE | BY: |
|---|---|---|---|

INDEX NO.

CIP NO. AS-BID

CITY ENGINEER: GARY LEE MOORE, P.E.

DESIGN GROUP

| | | | DATE |
|---|---|---|---|
| ENGINEER: | SEAN ZAHEDI/DARSHNA PATEL | LIC. NO. C-75974 | 07-14 |
| DESIGNED BY: | DARSHNA PATEL, CAN CHOW | | 07-14 |
| DRAWN BY: | CAN CHOW, HIEP LAM | | 07-14 |
| CHECKED BY: | ABID CHOWDHRY, P.E. | | 07-14 |
| APPROVED BY: | BRAD JENSON, P.E. | | 07-14 |

VERTICAL CONTROL: NGVD29, 1988 ADJ.
HORIZONTAL CONTROL: NAD83, EPOCH 1991.5

SHEET TITLE: TEMPERORY RELOCATION OF 10" WATER LINE

PROJECT: VENICE DUAL FORCE MAIN

ADDRESS: MARINA DEL REY, CALIFORNIA

WORK ORDER NO. SZC11631

DRAWING NO. C-46

SHEET

REVISION DATES (DESIGN STAGE ONLY)

FILE: Q:\CAD DATA\SZCxxxxx\szc11631\civil\asbid\vdfmDc46.dgn
DATE: 18-Sep-14 13:55

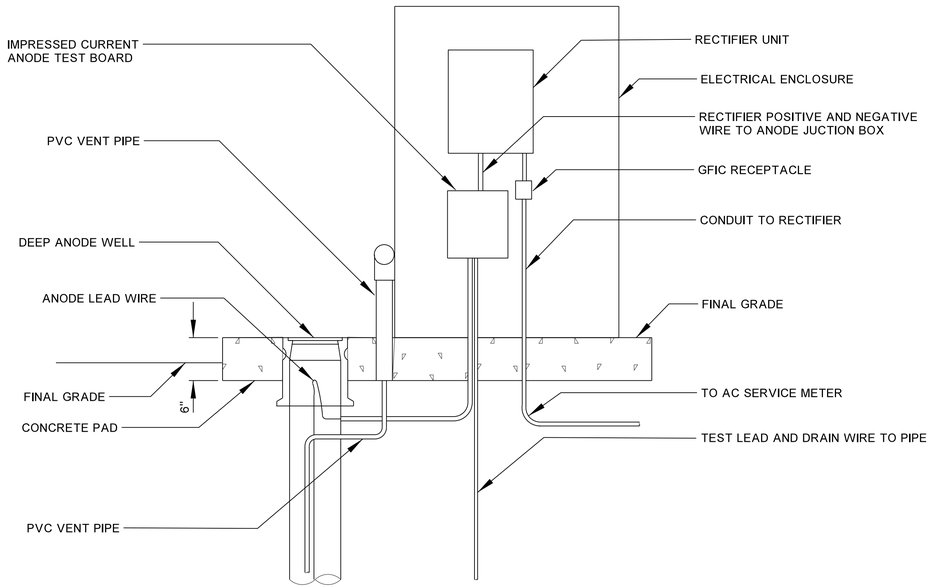


## ELEVATION
NTS

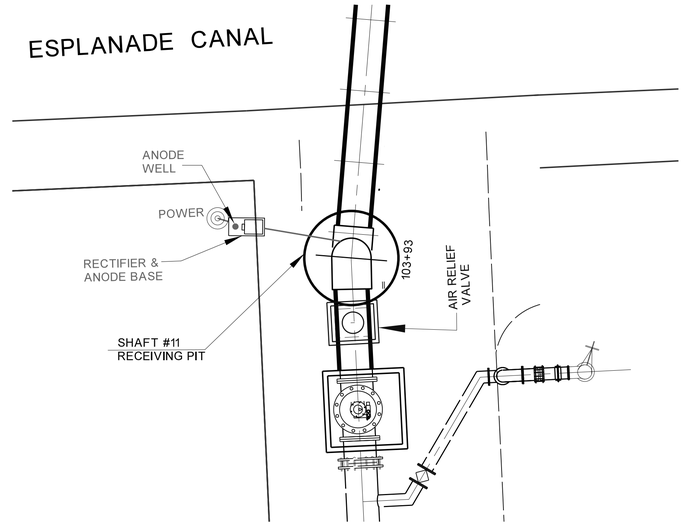


## PLAN OF LOCATION
NTS

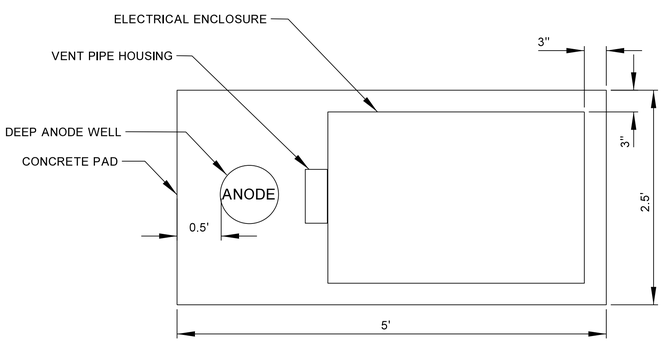


## PLAN OF ANODE & RECTIFIER
NTS

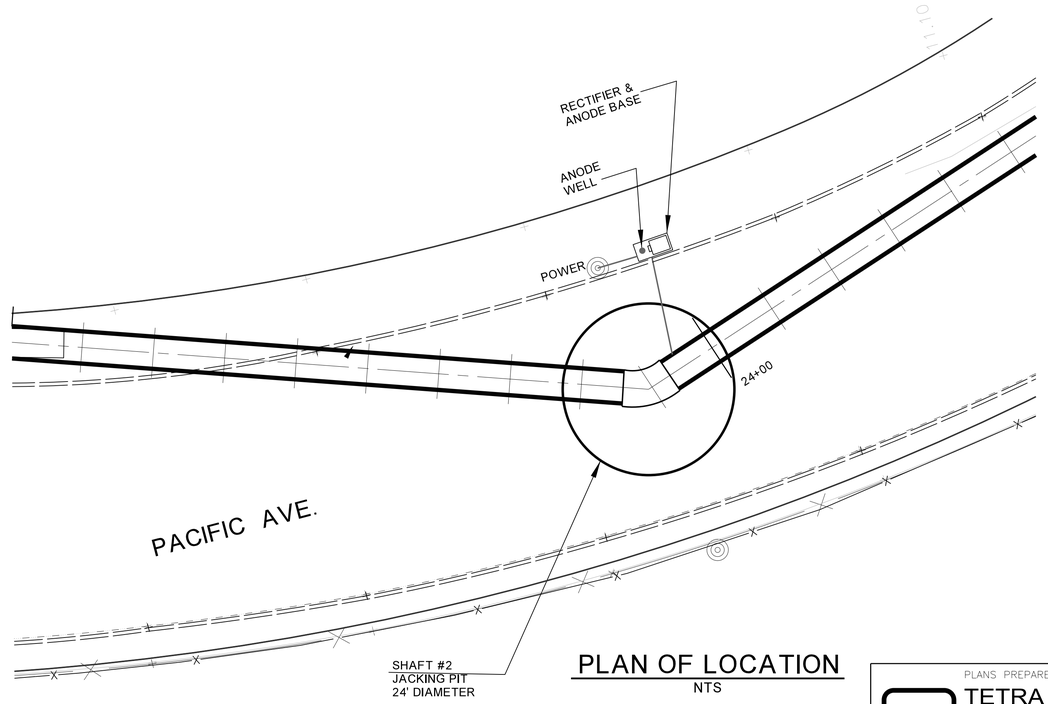


## PLAN OF LOCATION
NTS

PLANS PREPARED BY:
TETRA TECH
16241 Laguna Canyon Road, Suite 200
Irvine, California 92618
(949) 727-7099
(949) 727-7097 FAX

CITY OF LOS ANGELES DEPARTMENT OF PUBLIC WORKS
BUREAU OF ENGINEERING
LA DPW ENGINEERING TRANSFORMING LOS ANGELES

| REVISIONS | | | |
|---|---|---|---|
| NO. | | DATE | BY: |

CIP NO. AS-BID
INDEX NO.

CITY ENGINEER
GARY LEE MOORE, P.E.
DESIGN GROUP
LIC. NO. DATE
ENGINEER: 06-10
DESIGNED BY: BSE 06-10
DRAWN BY: 06-10
CHECKED BY: 06-10
APPROVED BY: 06-10

VERTICAL CONTROL: NGVD29, 1985 ADJ
HORIZONTAL CONTROL: NAD83, EPOCH 1991.5

SHEET TITLE: CORROSION PROTECTION
PROJECT: VENICE DUAL FORCE MAIN
ADDRESS: MARINA DEL REY, CALIFORNIA

WORK ORDER NO. SZC11631
DRAWING NO. CP-1
SHEET

REVISION DATES (DESIGN STAGE ONLY)

DIR&FILE:
DATE&TIME:

FILE: Q:\CAD DATA\SZCxxxxx\szc11631\corrosion control\anode-p&p.dgn
DATE: 16-May-14 15:28

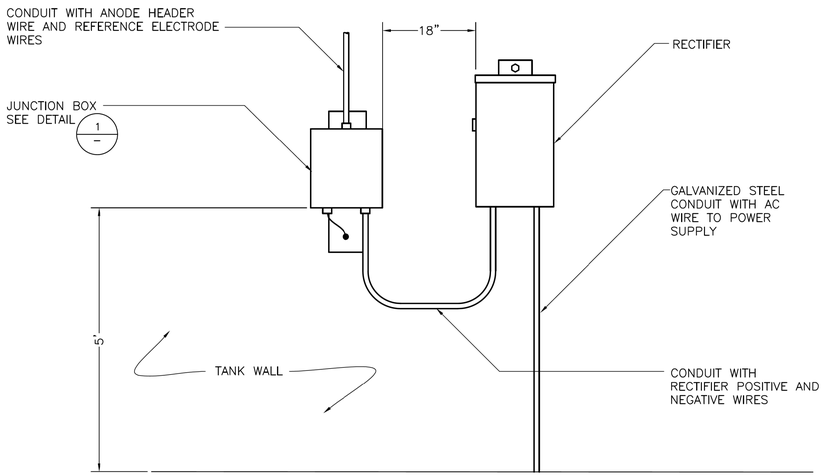


RECTIFIER AND ANODE JUNCTION BOX INSTALLATION (1/–)
NTS

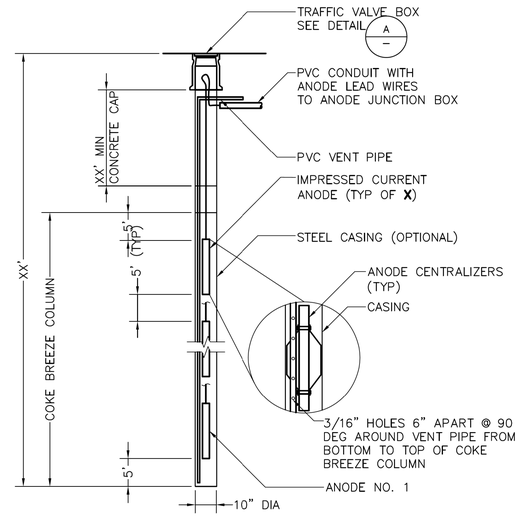


DEEP ANODE WELL (1/–)
NTS

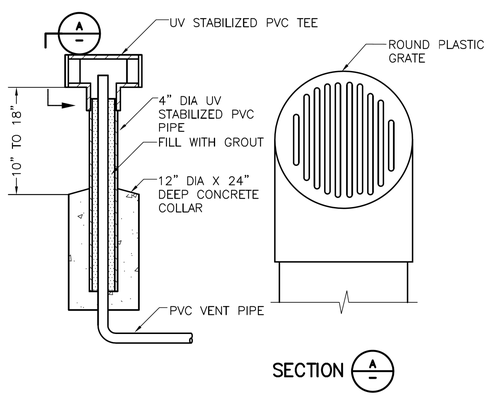


VENT PIPE HOUSING (5/–)
NTS

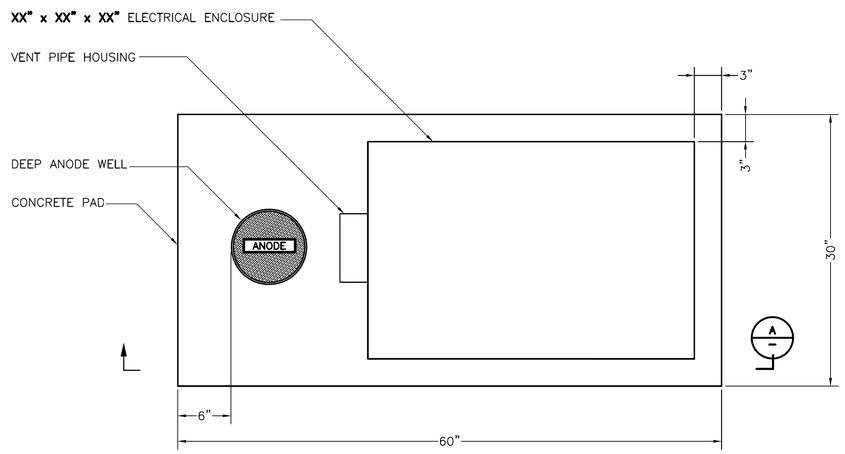


RECTIFIER INSTALLATION WITH ELECTRICAL ENCLOSURE PLAN VIEW (6/–)
NTS

PLANS PREPARED BY:
TETRA TECH
16241 Laguna Canyon Road, Suite 200
Irvine, California 92618
(949) 727-7099
(949) 727-7097 FAX

CITY OF LOS ANGELES DEPARTMENT OF PUBLIC WORKS
BUREAU OF ENGINEERING
LA DPW ENGINEERING TRANSFORMING LOS ANGELES

| REVISIONS | | | |
|---|---|---|---|
| NO. | DATE | BY: | |

INDEX NO.

CIP NO. AS-BID

CITY ENGINEER GARY LEE MOORE, P.E.
LIC. NO. DATE 06-10
DESIGN GROUP
ENGINEER: 06-10
DESIGNED BY: BSE 06-10
DRAWN BY: 06-10
CHECKED BY: 06-10
APPROVED BY: 06-10

VERTICAL CONTROL: NGVD29, 1985 ADJ
HORIZONTAL CONTROL: NAD83, EPOCH 1991.5

SHEET TITLE: CORROSION PROTECTION DETAILS #1
PROJECT: VENICE DUAL FORCE MAIN
ADDRESS: MARINA DEL REY, CALIFORNIA

WORK ORDER NO. SZC11631
DRAWING NO. CP-2
SHEET

REVISION DATES (DESIGN STAGE ONLY)

DIR&FILE:
DATE&TIME:

FILE: Q:\CAD DATA\SZCxxxxx\szc11631\corrosion control\anode details_01.dgn
DATE: 15-May-14 15:22

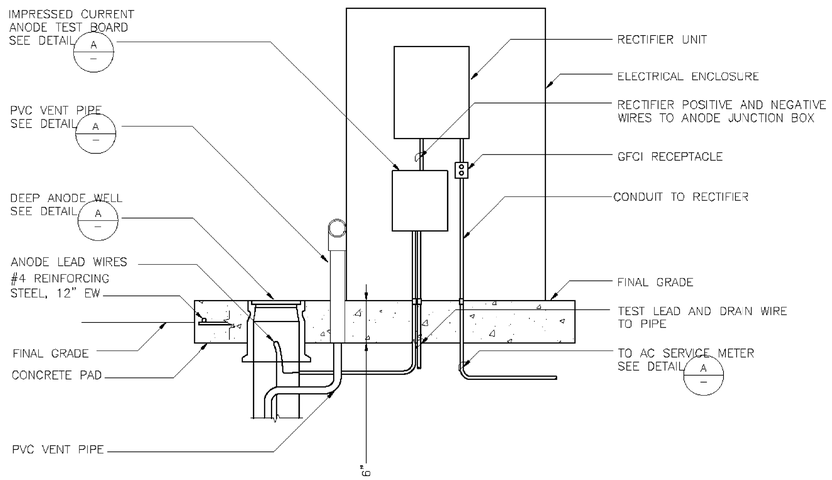


RECTIFIER INSTALLATION WITH ELECTRICAL ENCLOSURE SECTION (7)
NTS

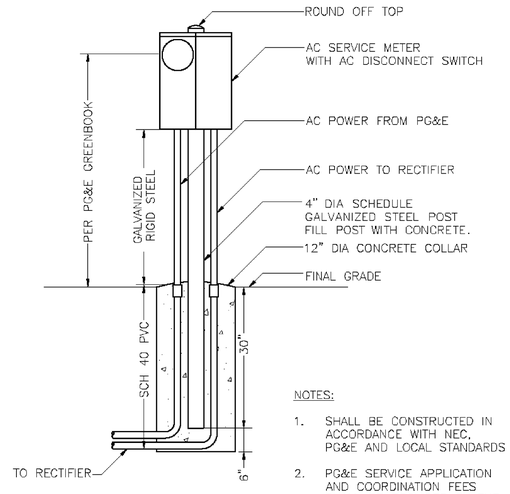


NOTES:

1. SHALL BE CONSTRUCTED IN ACCORDANCE WITH NEC, PG&E AND LOCAL STANDARDS
2. PG&E SERVICE APPLICATION AND COORDINATION FEES SHALL BE PROVIDED BY THE CONTRACTOR.

AC SERVICE METER (8)
NTS

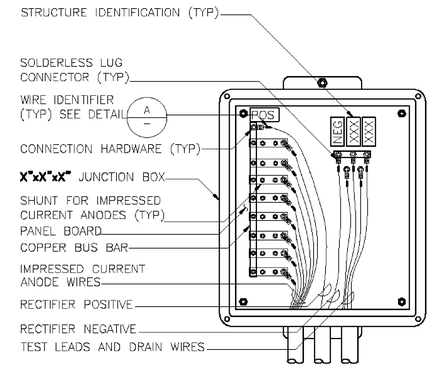


NOTE:

COVER, LATCH, HINGES, AND NEOPRENE GASKET NOT SHOWN FOR CLARITY

IMPRESSED CURRENT ANODE JUNCTION BOX (9)
NTS

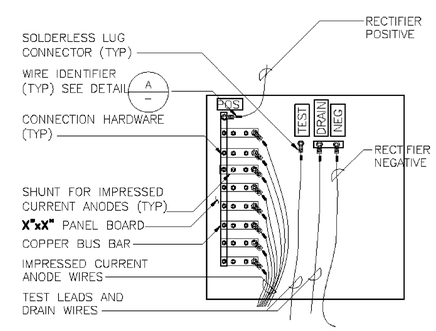


IMPRESSED CURRENT ANODE TEST BOARD (10)
NTS

PLANS PREPARED BY:
TETRA TECH
16241 Laguna Canyon Road, Suite 200
Irvine, California 92618
(949) 727-7099
(949) 727-7097 FAX

CITY OF LOS ANGELES DEPARTMENT OF PUBLIC WORKS
BUREAU OF ENGINEERING
LA DPW ENGINEERING TRANSFORMING LOS ANGELES

| REVISIONS | | | |
|---|---|---|---|
| NO. | | DATE | BY: |

INDEX NO.

CIP NO. AS-BID

CITY ENGINEER GARY LEE MOORE, P.E. DATE 06-10
LIC. NO. 06-10
DESIGN GROUP 06-10
ENGINEER: 06-10
DESIGNED BY: BSE
DRAWN BY:
CHECKED BY:
APPROVED BY:

VERTICAL CONTROL: NGVD29, 1985 ADJ
HORIZONTAL CONTROL: NAD83, EPOCH 1991.5

SHEET TITLE: CORROSION CONTROL--DETAILS 02
PROJECT: VENICE DUAL FORCE MAIN
ADDRESS: MARINA DEL REY, CALIFORNIA

WORK ORDER NO. SZC11631
DRAWING NO. CP-3
SHEET

REVISION DATES (DESIGN STAGE ONLY)

DIR&FILE:
DATE&TIME:

FILE: Q:\CAD DATA\SZCxxxx\szc11631\corrosion control\anode details_02.dgn
DATE: 16-May-14 15:24