TENANT IMPROVEMENT

NYC LOUNGE

FIRE PREVENTION NOTES

SCALE N.T.S (1)

1) EXIT DOORS SHALL SWING IN THE DIRECTION OF EXIT TRAVEL WHEN SERVING ANY HAZARDOUS AREA OR WHEN SERVING AN OCCUPANT LOAD OF 50 OR MORE.
2) EXIT DOOR SHALL BE OPENABLE FROM THE INSIDE WITHOUT USE OF A KEY OR ANY SPECIAL KNOWLEDGE OR EFFORT.
3) WIDTH AND HEIGHT OF REQUIRED EXIT DOORWAYS TO COMPLY WITH TITLE 24, CBC 2010
4) EXITS SHALL BE ILLUMINATED AT ANY TIME THE BUILDING IS OCCUPIED, WITH LIGHT HAVING AN INTENSITY OF NOT LESS THAN ONE FOOT-CANDLE AT FLOOR LEVEL.
5) EXIT SIGN SHALL BE PER TITLE 24, 1011
6) FIRE EXTINGUISHER REQUIREMENTS SHALL BE DETERMINED BY FIELD INSPECTOR.
7) BUILDING ADDRESS NUMBERS TO BE PROVIDED ON THE FRONT OF ALL BUILDINGS AND SHALL BE VISIBLE AND LEGIBLE FROM STREET FRONTING THE PROPERTY. SAID NUMBERS SHALL CONTRAST WITH THEIR BACKGROUND.
8) COMMERCIAL DUMPSTERS OR CONTAINERS WITH AN INDIVIDUAL CAPACITY ON 1.5 CUBIC YARDS OR GREATER SHALL NOT BE STORED OR PLACED WITHIN FIVE FEET OF COMBUSTIBLE WALLS, OPENINGS OR COMBUSTIBLE ROOF EAVE LINES UNLESS AREAS CONTAINING DUMPSTERS ARE PROTECTED BY AN APPROVED SPRINKLER SYSTEM.
9) SEPARATION OF EXITS OR EXIT-ACCESS DOORWAYS SHALL COMPLY WITH CBC 2010
10) AN APPROVAL FIXED FIRE EXTINGUISHER SYSTEM FOR THE KITCHEN HOOD, DUCTS AND COOKING SURFACES SHALL BE HANDLED BY THE LICENSED FIRE PROTECTON CO.
11) THE LICENSED FIRE PROTECTION CO. IS RESPONSIBLE FOR THE U.L. APPROVAL SYSTEM NUMBER, THE SUBMISSION U.L. APPROVAL SCHEMATIC DRAW'G TO AREA INSPECTION UNIT.
12) INTERIOR FINISH SHALL BE PROVIDED IN ACCORDANCE WITH C.B.C 2010 CHA 8, TABLE 803.9
13) ALL DRAPES, HANGINGS, CURTAINS, DROPS AND ALL OTHER DECORATIVE MATERIALS SHALL COMPLY WITH FIRE CODE

HEALTH DEPARTMENT NOTES

SCALE N.T.S (4)

1. ALL EQUIPMENT SHALL MEET NATIONAL SANITATION FOUNDATION DESIGN AND INSTALLATION REQUIREMENTS TO IT'S EQUIPMENT.
2. LIGHT FIXTURES IN FOOD PREPARATION, OPEN FOOD STORAGE AND UTENSIL WASHING AREAS ARE TO BE PROTECTED AGAINST BREAKAGE THROUGH THE USE OF PLASTIC SHIELDS, PLASTIC SLEEVES, SHATTER PROOF BULBS AND/ OR OTHER APPROVED DEVICES.
3. EXTERIOR DOORS SHALL BE SELF-CLOSING AND FIT TO A MAXIMUM OF 1/4" AT THE BASE AND SIDES.
4. PROVIDE PERMANENTLY MOUNTED SINGLE SERVICE SOAP AND TOWEL DISPENSERS AT ALL HAND WASH BASINS.
5. TOILET ROOMS AND DRESSING ROOM DOORS SHALL BE SELF-CLOSING.
6. SEAL ALL CRACKS AND CREVICES IN COUNTERS, CABINETS, AROUND METAL FLASHING, SINK BACKSLASHES AND AROUND PIPES AND CONDUIT WITH A NONE-HARDENING SILICONE SEALANT.
7. PROVIDE ALL AREA OR CABINET FOR STORAGE OF CLEANING EQUIPMENT AND SUPPLIES AWAY FROM PREPARATION, UTENSIL WASHING AND FOOD STORAGE AREAS.
8. A ROOM, ENCLOSURE, OR DESIGNATED AREA, SHALL BE PROVIDED WHERE EMPLOYEES MAY CHANGE AND STORE CLOTHES.
9. PRIOR TO STARTING CONSTRUCTION, SUBMIT TWO SETS OF YOUR LOCAL BUILDING AND SAFETY DEPARTMENT FOR REVIEW, APPROVAL AND NECESSARY PERMITS.
10. A HEALTH PERMIT MUST BE OBTAINED PRIOR TO OPERATION. FAILURE TO OBTAIN A HEALTH PERMIT IS A MISDEMEANOR VIOLATION. PLEASE CONTACT YOUR PLAN CHECKER TO ARRANGEMENT AN APPOINTMENT FOR SITE EVALUATION AND APPROVAL PRIOR TO STOCKING FOOD ON THE PREMISES.

PROJECT SUMMARY

SCALE N.T.S (5)

1) TYPE OF OCCUPANT GROUP : A-2

2.) TYPE OF CONSTRUCTION : V - B (FIRE SPRINKLERED)

REQUIREMENT 2 EXIT , PROVIDE 2 EXIT

3.) TOTAL AREA: 2946 SF.

4.) BUILDING STORIES: 2

5.) CODE APPLIED:
2013 CALIFORNIA BUILDING CODE (13 CBC),
2013 CALIFORNIA PLUMBING CODE (13 CPC),
2013 CALIFORNIA MECHANICAL CODE (13 CMC),
2013 CALIFORNIA FIRE CODE (13 CFC)
2013 CALIFORNIA ELECTRICAL CODE (13 CEC)
2013 CALIFORNIA FIRE CODE

6.) EXTERIOR SIGN, H.V.A.C . FIRE SPRINKLERED UNDER SEPARATE PERMIT .

8.) MAX. EMPLOYEES INCLUDING MANAGER PER SHIFT 4

SHEET INDEX

SCALE N.T.S (6)

A-0 TITLE SHEET
A-1 FLOOR PLAN
A-1.1 ELEVATION PLAN
A-2 REFLECTED CEILING PLAN & DETAIL
E-0 SINGLE LINE
E-1 POWER PLAN
E-2 CEILING PLAN

M-1 ROOF PLAN
M-2 MECH DETAIL
M-2.1 MECH DETAIL
M-3 A/C LAYOUT PLAN
P-1 PLUMBING PLAN
P-2 WASTE PLAN

OWNER & TENANT INFORMATION

SCALE N.T.S (7)

MAXI-MATIC USA
PROPERTY OWNER : BOBBY LIU
18401 E ARENTH AVE BUILDING #B
CITY OF INDUSTRY CA 91748
TEL: 626-912-9877 FAX: 626-912-6237

CONTRACTOR NOTES

SCALE N.T.S (2)

1.BEFORE SUBMITTING THE BID, THE CONTRACTOR SHALL CAREFULLY EXAMINE THE PLANS PERTAINING TO THIS WORK, CONTRACTOR SHALL VISIT THE SITE AND FULLY INFORM HIMSELF AS TO ALL CONDITIONS AND LIMITATIONS APPLYING TO THIS WORK HE SHALL ESTIMATE AND INCLUDE IN HIS BID A SUM SUFFICIENT TO COVER THE COST OF ALL LABOR AND MATERIALS TO ACCOMPLISH THE INTENT OF THESE PLANS.

2. THE CONTRACTOR SHALL OBTAIN PERMITS AS REQUIRED BY THE Governing AUTHORITIES FOR CONSTRUCTION.

3. ELECTRICAL, MECHANICAL AND PLUMBING SYSTEMS SHALL BE DONE BY THE CONTRACTOR.

4. THE CONTRACTOR SHALL PROCURE IN THE OWNER'S NAME, AND CHARGES FOR INSTALLATION OF THE WATER AND GAS METERS AND ALL PIPING FROM MAIN TO MAID METERS.

5. THE CONTRACTOR SHALL SENT PROPER NOTICES. MAKE ALL NECESSARY ARRANGEMENTS AND PERFORM ALL SERVICES REQUIRED IN THE MAINTENANCE OF ALL PUBLIC UTILITIES

6. THE CONTRACTOR SHALL REQUIRE SUCH COOPERATION OF THE VARIOUS TRADES AS WILL BE NECESSARY TO COMPLETE EACH AND EVERY PART OF THE WORK. EVEN THROUGHOUT SPECIFICALLY INDICATED. NOTED OR DETAILED ON THE DRAWINGS SPECIFICATIONS.

7. DIMENSIONS AND CONDITIONS AT THE JOBSITE SHALL BE VERIFIED BY(THE CONTRACTORS. DISCREPANCIES IN THE DRAWINGS OR BETWEEN THE DRAWINGS AND ACTUAL FIELD CONDITIONS OR CODE REQUIREMENTS SHALL BE REPORTED TO THE ARCHITECT. CORRECTED DRAWINGS OR INSTRUCTIONS SHALL BE ISSUED By THE ARCHITECT PRIOR TO THE INSTALLATION OF ANY WORK

VICNITY MAP

SCALE N.T.S (3)

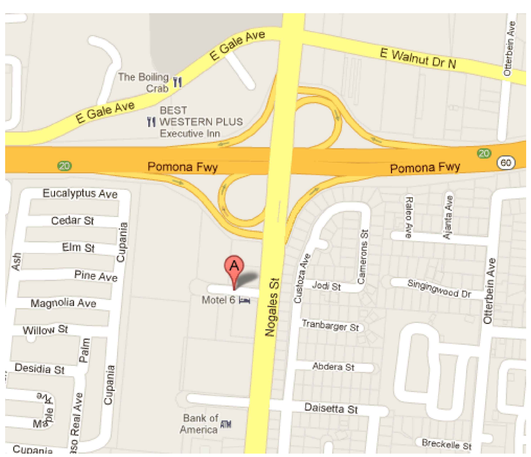

SITE PLAN

SCALE N.T.S (8)

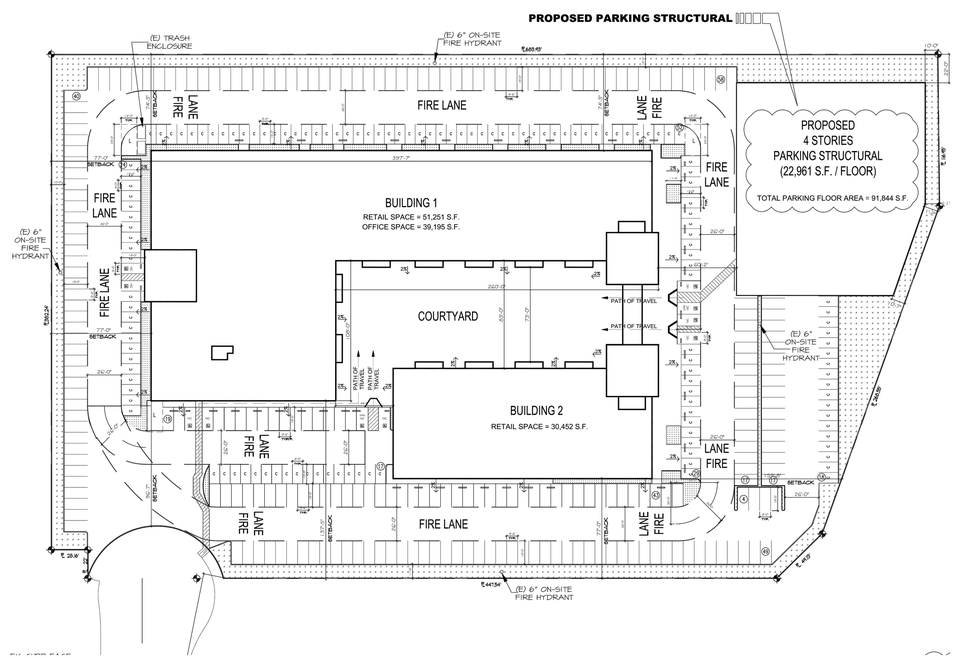

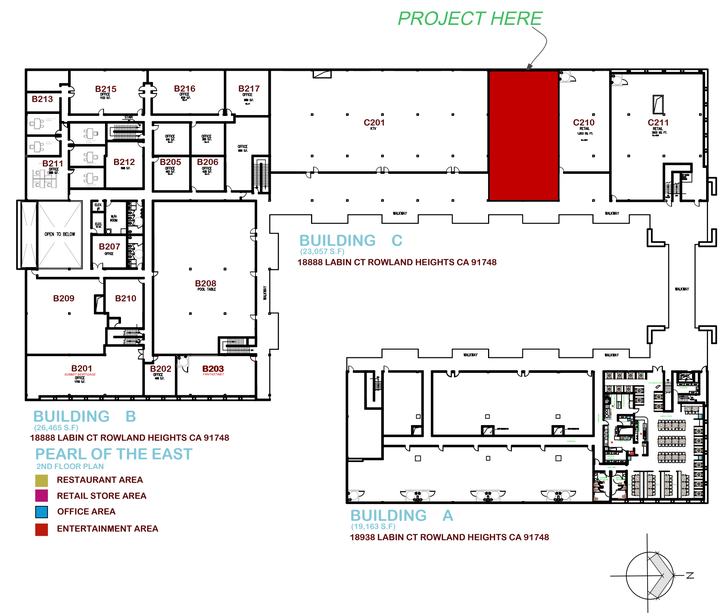

CND DESIGN service, Inc.
COMMERCIAL
RESIDENTIAL
INTERIOR DESIGN
18888 Labin Ct Suite#B213
Rowland Heights, Ca 91748
TEL: 909.569.2069
FAX:626.608.0445
E-MAIL: Cnd9@icloud.com

Seal:

REGISTERED PROFESSIONAL ENGINEER DONGONG PETER LEE NO. C40868 Exp.03/31/15 CIVIL STATE OF CALIFORNIA

A Project for:

TENANT IMPROVEMENT
NYC LOUNGE
18888 LABIN CT C209
ROWLAND HEIGHTS CA 91748

Client:

Revisions:

PERMIT#

No.	Description	Date

Project No.:
Drawn By: KEN FANG
Reviewed By:
Scale:
Date:
Filename:
Sheet Title:

COVER SHEET

Sheet #:

A-0

Not for construction until reviewed, signed, and dated.

ROOM FINISH SCHEDULE

SCALE N.T.S (1)

ITEM / ROOM NAME	FLOOR: QUARRY TILE SMOOTH	FLOOR: EPOXY/CONC.	FLOOR: SHEET VINYL 1 PC W/BASE	FLOOR: CARPET	FLOOR: CER. TILE	FLOOR: S. STEEL	FLOOR: SEALED CONC. SMOOTH	BASE: 4" OR 6" HIGH VINYL BASE	BASE: 6" CER. TILE W/ 3/8" R. WHITE COVED GROUT	BASE: 6" CONC. BLK. W/ 3/8" COVED	BASE: 6" CER TILE	BASE: 6" HIGH SHEET METAL	BASE: CONTINUE WITH 3/8" RAD.	WALL: DRY WALL (Gypsum Bd.) USE MOISB IN TOILET 4"-0" MIN. AFF	WALL: HIGH GLOSS ENAMEL PAINT, WHITE	WALL: WASHABLE, SMOOTH	WALL: FLAT PAINT	WALL: RESISTANT WALL 8'-0" HIGH, FRP	WALL: MASTAL, GALV. PANEL	WALL: RESISTANT WALL 4'-0" HIGH, FRP	CEILING: DRY WALL CEILING	CEILING: HIGH GLOSS ENAMEL PAINT, WHITE	CEILING: WASHABLE, SMOOTH	CEILING: ACOUSTIC CLG PANEL "DOS"OPTSIUM,WHITE VINYL	CEILING: "T" BAR CEILING PANEL 2X2 ACOUSTIC CLG PANEL	CEILING: METAL, GALV. PANEL
SERVICE AREA 1 & SERVICE AREA 2																											
KITCHEN AREA/PREP AREA/STORAGE	○										○			○	○	○		○					○	○	○		
RESTROOM					○				○					○	○	○				○	○	○	○				
DINNER AREA											○						○							○	○		

REMARK

FINISH SCHEDULE NOTES:

1) Wall and ceilings in all areas except dining area shall be durable,Smooth, and nonabsorbent, with a light colored (light colored isdefined as having a light reflectance value of 70%or greater.), easily cleanable, washable finish.
2) All counter surface including underside to be durable, smooth,nonabsorbent easily cleanable and washable finish (may requirestainless stee or NSF approval high pressure laminate).
3) Flooring under equipment and at the base coves shall be completely smooth. floor surfaces which contain slip resistant agents shall be restricted to traffic areas only.
4) All equipment shall be either easily movable (ie., on casters),min. 6 inch rounded metal legs, or sealed to min. 2 inch solidmasonry island with min. three-eighths inch coved radius.
5) Floor Smooth Conc. must be Top-set type ceramic coved base.
6) Water resistant walls (i.e., FRP, stainless steel, ceramic tile ",)are reQuired behind all sinks and dishwashers. material to be min. 8 ft. high for CITY.
7) A min. 20-foot candles of light measured 30" A.F.F. in kitchen,utensil washing area, service area, though out facility for duringgeneral cleaning up activity.
8) A min. 10-foot candles of light measured 30" A.F.F. in restroomand storage rooms.

ALL FINISHES SHALL COMPLY WITH TABLE 803.5, CBC.
TO SUBMIT SHOP DRAWINGS AND FOAM PANEL SPECS OF WALK IN COOLER AND FREEZER TO BUILDING DEPARTMENT FOR APPROVAL PRIOR TO INSTALLATION.

MATERIALS NOTES:

CEILING PANEL -- The following ceiling panels are approved.
Armstrong #870 Mina Board ML (Mil laminaté non-perforated)
Armstrong #1721 or #884 Mylar Fire Guard (non-perforated)
Domtar Gypsum #3270 White Vinyl facing panel
U.S. Gypsum #3270 Vinyl Rock
U.S. Gypsum #56091 Envirogard with clean room facing

FLOOR COVERING: -- The following are approved.
Tiles -- American Olean; Dal Tiles
Tapset Ceramic Coved Base -- B&W Tile Co. #S-3619T; OTW Inc. #S-3619T
Sheet vinyl -- Armstrong "Classic Corlon" (86000 Series);
Armstrong "Custom Corlon" (86000 Series);
Tarket "Expression Optima" (05800 Series)
Concrete Sealer -- Ameritone #7101, Aque Mix Choice 15

EQUIPMENT SCHEDULE

SCALE N.T.S (2)

ALL EQUIPMENT SHALL BE NSF APPROVED, REFRIGERATOR SHALL BE MEET NEW NSF STANDARD 7)

NEW	EX.	NO	QTY	DESCRIPTION	MODEL &MARK	REMARK
				SERVICE AREA		
○		C01	1	AIR CURTAIN W/ MICRO SWITCH (DOOR ACTIVATED MIN.1600 FPM	"MARS"	115V /5.1A/1
○		C02	1lot	BOOTH	CUSTOM-MADE	
○		C03	1lot	TABLE AND CHAIR	CUSTOM-MADE	
○		C04	1lot	CHAIR	CUSTOM-MADE	
○		C05	2	3 TUBE BAR SINK (WASTE TO F/S)(2)16"X19"DB	"JAXPRO" BS3C72	
○		C06	2	UNDER COUNTER REFRIGERATOR	"TRUE"TUC-48R	115V/60HZ/5.0A
○		C07	1 LOT	S.S. SPLASHING GUARD (6" HIGH FORM SINK)	CUSTOM-MADE	
○		C08	3	DROP-IN-HAND SINK w/SOAP & TOWEL DISP.	"KROWNE" 28-1515	
○		C09	2	BEER DISPENSER(DRAIN TO F/S)	"BEVERAGE-AIR"BM23	115V,1ø. 4.0A
○		C10	3	JOCKEY Box	"KROWNE" 1800-18-30	
○		C11	3	ICE BINS	CUSTOM-MADE	
○		C12	1lot	SERVICE COUNTER	CUSTOM-MADE	
○		C13	1lot	THE REAR COUNTER	CUSTOM-MADE	
				KITCHEN AREA		
○		K01	1	12'-0"x4'-0" HOOD w/FIRE PROTECTION SYSTEM TYPE "I"	"CENTRAL" 18BI	208/60 1 1/2HP
○		K02	1	MAKE-UP AIR	"ARCTIC CIRCLE" ES630	208/60 1 HP
○		K03	1	DEEP FRYER	"FRYMASTER"GF-14	100,000 BTU
○		K04	1	3 HOLE CHINESE WOK RANGE (WASTE TO F/S)W/ THE FILL FAUCETS	"AMERICAN RANGE"ARC3	320,000 BTU
○		K05	1	GAS RICE COOKER	"RINNAI" RER-55AS	35,000 BTU
○		K06	1	75 GAL WATER HEATER 76,000 BTU	"AMERICAN STANDARD"75-76-AS	76,000 BTU
○		K07	2	S.S. SPLASHING GUARD (18" HIGH FORM SINK)	CUSTOM-MADE	
○		K08	1	MOP SINK w/MOP HANGER& SHELF FOR CLEAN EQUIP.	"EAGLE"	
○		K09	1	ICE MACHINE(WASTE TO F/S)	HOSHIZAKI"KM-280MAH"	120V/60 11.6A
○		K10	1	HOT WATER BOILER (WASTE TO F/S)	"CECILWARE"ME10E-N	120V,1ø. 15A
○		K11	1lot	S.S WORK TABLE	"ADVANCE TABCO"	
○		K12	1	PREP. COLD TABLE (SELF-CONTAINED)	"TRUE" TSSU-60-12	115V/60HZ/7.8A
○		K13	1	HAND SINK w/SOAP & TOWEL DISP.	"TURBO-AIR"	
○		K14	1lot	S.S. SPLASHING GUARD (6" HIGH FORM SINK)	CUSTOM-MADE	
○		K15	1	PREP. SINK (WASTE TO F/S)	"TURBO-AIR"	
○		K16	1	3 COMPARTMENT SINK (2)-20"X24" DR. BD. (DIRECTLY CONNECTION)	"TURBO AIR" TSB-3C-D2	
○		K17	1lot	S.S WALL DOUBLE SHELVING	CUSTOM-MADE	
○		K18	1	2 DOOR FREEZER (SELF-CONTAINED)	"TRUE" - T-49F	115/60 9.4A
○		K19	1lot	S.S. STORAGE SHELVING .	"EAGLE"	
○		K20	1	EMP'S LOCKER W/ 6" H LEGS	GLOBAL	
○		K21	1lot	S.S. SHELF FOR WALK-INS	"EAGLE"	
○		K22	1	WALK-IN COOLER (WASTE TO F/S) REFRIGERANT TYPE R134A	NSF/ANSI STANDARD7	

ALL EQUIPMENT, INCLUDING SHELVING, MUST BE SUPPORTED BY SIX(6) INCH HIGH, EASILY CLEANABLE LEGS, COMMERCIAL CASTORS, OR COMPLETELY SEALED IN POSITION ON A FOUR(4) INCH HIGH CONTINUOUSLY COVED BASE OR CONCRETE CURB TO FACILITATE EASE OF CLEANING.

DOORS SCHEDULE

SCALE N.T.S (3)

DR. TYPE/SIZE	DESCRIPTION	FRAME	REMARKS	
A) 36"X6'-8"	ALUM/TEMP GLASS	STEEL	32" CLR. EA. DR., W/P PANIC HARDWARE (PUSH TYPE) SELF-CLOSING.	D1 EXISTING
B) 36"X6'-8"	WOOD, PAINT	WOOD	32" CLR.SELF-CLOSING.	D2
C) 36"X6'-8"	ALUM TWO-WAY SWING	HM/KD	32" CLR.SELF-CLOSING.	D3
D) 36"X6'-8"	GALV.	(WALK-IN) GALV.	32" CLR.SELF-CLOSING.	D4

DOOR PANIC HARDWARE NOTE: 2 PIECE VERTICAL RODS VON DUPRIN, JACKSON OR EQUAL, PUSH BAR MUST BE OFFSET FROM DRS EDGE.

D1 EXISTING 10" MIN. BOTTOM RAIL OR PROVIDE KICK PLATE

RUBBER BUMPER ON CHAIR COMPRESSED CARPET 1/4" MAX. BELOW THRESHOLD

DOOR PANIC HARDWARE NOTE: 2 PIECE VERTICAL RODS RON DUPRIN, JACKSON OR EQUAL, PUSH BAR MUST BE OFFSET FROM DRS EDGE.

THE DOOR SHALL SWING TO THE FULLY OPEN POSITION WHEN AN OPENING FORCE NOT TO EXCEED 5 POUNDS (EXTERIOR/INTERIOR DOORS) AND 15 POUNDS (FIRE DOORS) IS APPLIED TO THE LATCH SIDE(CBC 1003.3.1.5 AND 1133B.2.5)

"manually operated flush bolts shall not be permitted" per §1008.1.8.4.

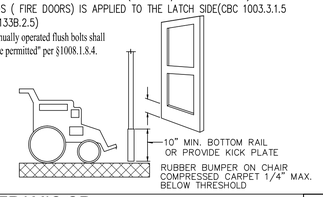

TYP. CERAMIC OR QUARRY TILE DETAIL

SCALE N.T.S (4)

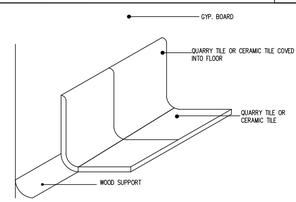

INTERIOR CEILING HEIGHT NON LOAD BEARING WALL DETAIL

SCALE N.T.S (5)

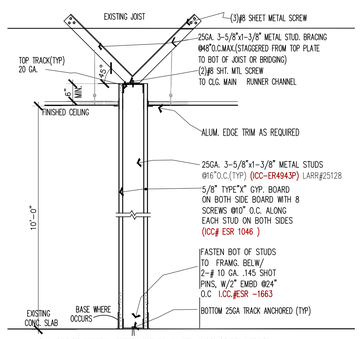

CAPABLE OF WITHSTANDING MINIMUM LATERAL FORCE OF 5 PSF PER SECTION 1607.13, CBC. SEE CHECK-SET OF PLANS.

SERVICE COUNTER SECTION

SCALE N.T.S (6)

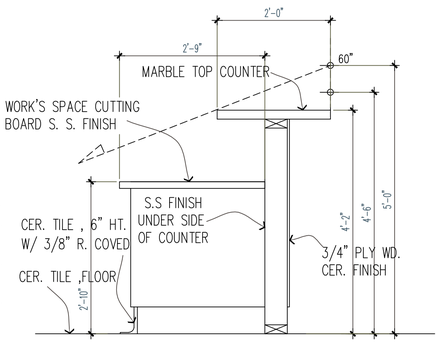

LEGEND:

- ALL ARE EXISTING WALL, NO CHANGE.
- NEW INTERIOR NON BEARING WALL, 25GA. 3-5/8"x1-1/4" METAL STUDS @16"O.C.(TYP) (ICC# ER 4943P) (5)
- WALK-IN WALL
- FLOOR SINK
- FLOOR DRAIN

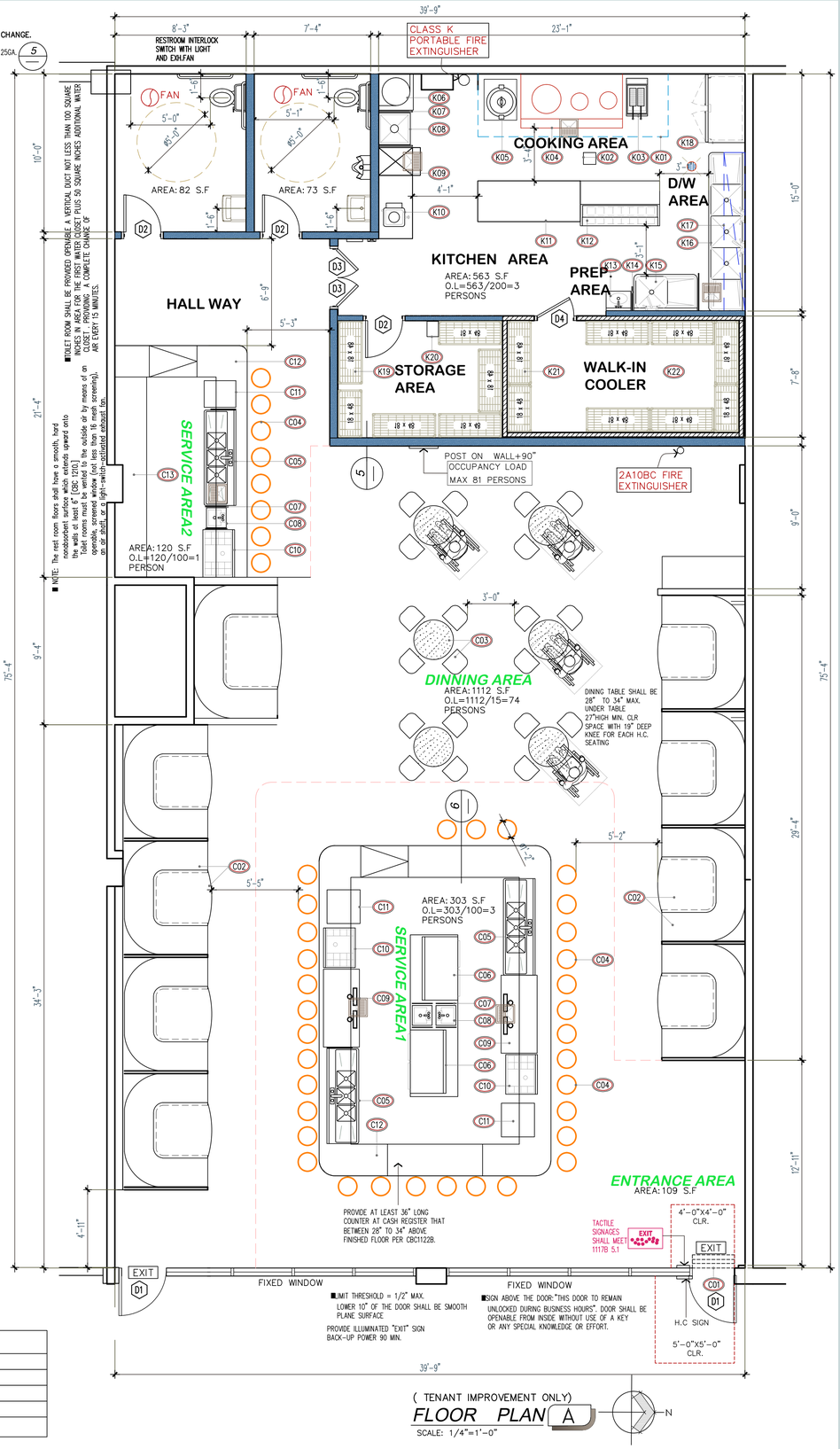

O.L CALCULATION

DINING AREA	1112/15=74
KITCHEN AREA	563/200=3
SERVICE/BAR AREA	423/100=4
TOTAL	81

(TENANT IMPROVEMENT ONLY)
FLOOR PLAN A
SCALE: 1/4"=1'-0"

CND DESIGN service, Inc.
COMMERCIAL
RESIDENTIAL
INTERIOR DESIGN
18888 Labin Ct Suite#B213
Rowland Heights, Ca 91748
TEL: 909.569.2069
FAX.626.608.0445
E-MAIL: Cnd9@icloud.com

Seal: REGISTERED PROFESSIONAL ENGINEER DONGONG PETER LEE NO. C40868 Exp.03/31/15 CIVIL STATE OF CALIFORNIA

A Project for:

TENANT IMPROVEMENT
NYC LOUNGE
18888 LABIN CT C209
ROWLAND HEIGHTS CA 91748

Client:

Revisions:

PERMIT#

No.	Description	Date

Project No.:
Drawn By: KEN FANG
Reviewed By:
Scale:
Date:
Filename:
Sheet Title: FLOOR PLAN

Sheet #: A-1

Not for construction until reviewed, signed, and dated.

Z:\14(CDM)\ROWLAND HEIGHTS\EASTERN MILOON\EASTERN MILOON15-12(1).dwg