Regional Planning Commission Transmittal Checklist

Hearing Date
02/18/2015
Agenda Item No.
7X

Project Number: R2013-02483-(5)

Case(s): Tentative Parcel Map No. PM072311
East Pasadena Community Standards Modification Case No. 201300004
Environmental Assessment Case No. 201300205

Planner: Marie Pavlovic

- ☒ Project Summary
- ☒ Property Location Map
- ☒ Staff Analysis
- ☐ Draft Resolution / Draft Ordinance / 8.5x11 Map (ZC or PA)
- ☒ Draft Findings
- ☒ Draft Conditions
- ☒ Burden of Proof Statement(s)
- ☒ Environmental Documentation (ND / MND / EIR)
- ☒ Correspondence
- ☒ Photographs
- ☒ Aerial Image(s)
- ☒ Land Use/Zoning Map
- ☒ Tentative Tract / Parcel Map
- ☐ Site Plan / Floor Plans / Elevations
- ☐ Exhibit Map
- ☐ Landscaping Plans
- ☒ CSD Burden of Proof Map

Reviewed By: Noushin Paidar

Department *of* Regional Planning
320 West Temple Street
Los Angeles, California 90012

PROJECT SUMMARY

PROJECT NUMBER	HEARING DATE
R2013-02483	02/18/15

REQUESTED ENTITLEMENTS

Tentative Parcel Map No. PM072311
Community Standards District Modification No. 201300004
Environmental Assessment No. 201300205

OWNER / APPLICANT	MAP/EXHIBIT DATE
Kuei Yueh Hsu/ Ramon Ronquillo	04/30/14

PROJECT OVERVIEW

A subdivision request to create two single-family lots with lot width and street frontage of approximately 54 feet each, less than the required street frontage and average lot width of 60 feet in the East Pasadena-San Gabriel Community Standards District (CSD). The project site is currently improved with a single-family residence and garage which are proposed to be demolished.

LOCATION	ACCESS
8828 Ardendale Avenue, San Gabriel	Ardendale Avenue
ASSESSORS PARCEL NUMBER(S)	**SITE AREA**
5381-027-048	0.37 net/0.45 gross acres
GENERAL PLAN / LOCAL PLAN	**ZONED DISTRICT**
Countywide General Plan	South Santa Anita-Temple City
LAND USE DESIGNATION	**ZONE**
1 – Low Density Residential (1-6 du/ac)	R-A (Residential-Agricultural)

PROPOSED UNITS	MAX DENSITY/UNITS	COMMUNITY STANDARDS DISTRICT
2	2	East Pasadena – San Gabriel

ENVIRONMENTAL DETERMINATION (CEQA)

Negative Declaration

EY ISSUES

- Consistency with the Los Angeles County General Plan
- Satisfaction of the following Section(s) of Title 22 of the Los Angeles County Code:
  - 22.56.1700 (Hearing Officer or Commission Review of Modifications)
  - 22.44.135 (East Pasadena-San Gabriel CSD Requirements)
  - 22.20.450 (R-A Zone Development Standards)

CASE PLANNER:	PHONE NUMBER:	E MAIL ADDRESS:
Marie Pavlovic	(213) 974 - 6433	mpavlovic@planning.lacounty.gov

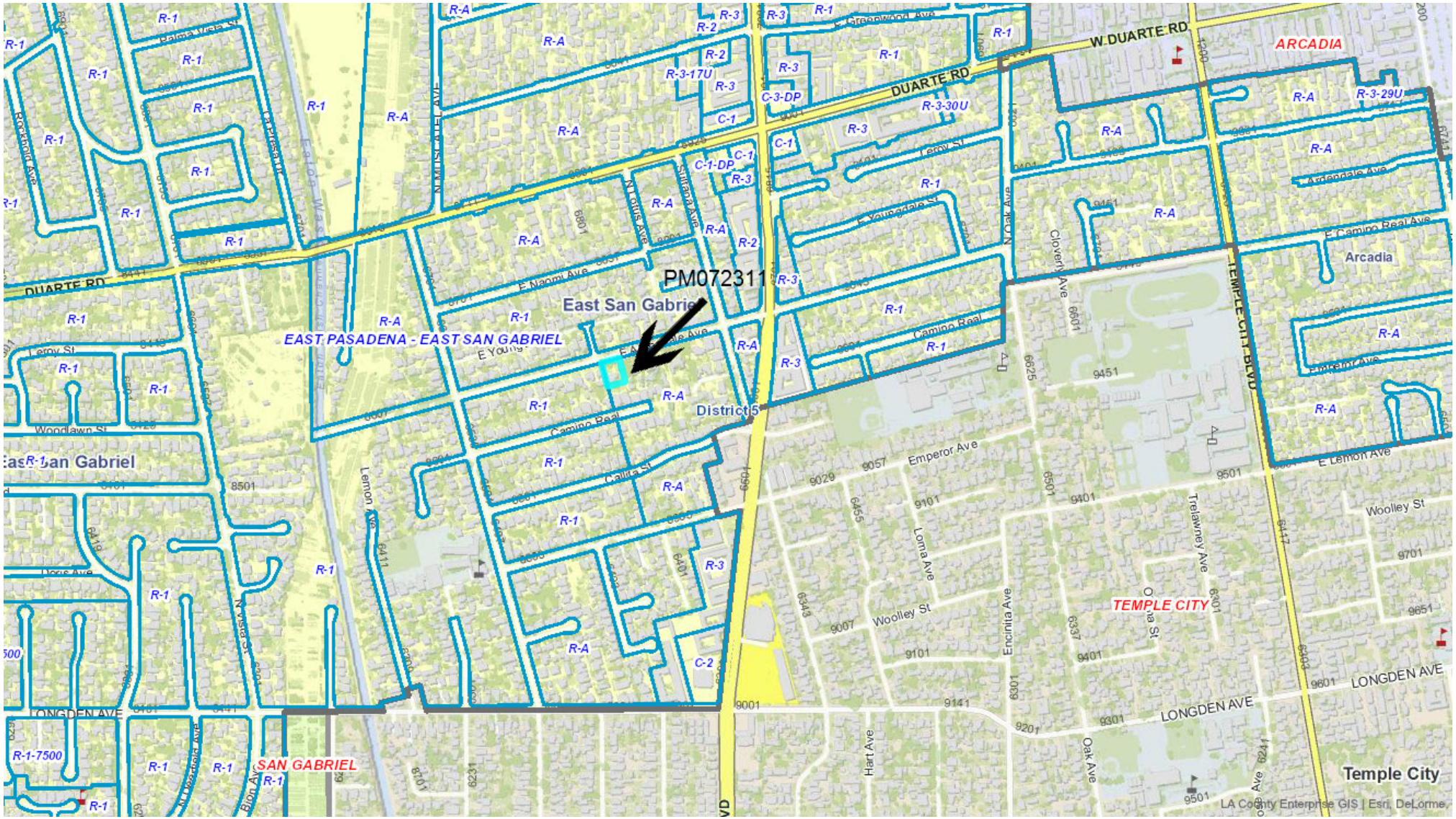

Created in GIS-NET3

Property Location Map

Printed: Jan 20, 2015

0 2,000
Feet

Copyright 2013 - Los Angeles County Department of Regional Planning, GIS Section. Note: This map represents a quick representation of spatial imagery or vector layers using GIS-NET3. The map should be interpreted in accordance with the GIS-NET3 Public disclaimer statement. Printed with permission from the Los Angeles County Dept. of Regional Planning. All rights reserved.

ENTITLEMENTS REQUESTED

- Tentative parcel map to create two (2) single-family fee lots on 0.45 gross (0.37 net) acres, pursuant to County Code Section 21.40.010.

- Community Standards District (CSD) Modification to reduce the lot width and street frontage for both lots from 60 feet to nearly 54 feet pursuant to County Code Section 22.44.135(C)(4)(a).

PROJECT DESCRIPTION

The applicant requests to create two (2) single-family fee lots on 0.45 gross (0.37 net) acres. The applicant also requests a CSD modification to create two parcels with less than required street frontage and required lot width. The project site is currently developed with a single-family residence and garage which are proposed to be demolished. Ardendale Avenue, a two-lane local street, provides access to the site.

MAP DESCRIPTION The tentative parcel map dated 04/30/14 depicts an existing single-family dwelling unit with attached garage. The existing single-family house with attached garage is proposed to be demolished and all other existing features such as the driveway, interior fence, water fountain, built-in BBQ, and storage shed will also be removed.

EXISTING ZONING

The subject property is zoned R-A (Residential Agricultural – 5,000 square feet minimum lot area).

Surrounding properties are zoned as follows:
North: R-1
South: R-A & R-1
East: R-A
West: R-1

EXISTING LAND USES

The subject property is developed with a single-family house with an attached garage.

Surrounding properties are developed as follows:
North: 1-Low Density Residential (1-6 du/ac)
South: 1-Low Density Residential (1-6 du/ac)
East: 1-Low Density Residential (1-6 du/ac)
West: 1-Low Density Residential (1-6 du/ac)

PREVIOUS CASES/ZONING HISTORY

Lot Line Adjustment No. 101,883 recorded on January 5, 2001 which resulted in the reshaping of subject site into a rectangular lot.

ENVIRONMENTAL DETERMINATION

The Los Angeles County ("County") Department of Regional Planning recommends that a Negative Declaration is the appropriate environmental documentation under the California Environmental Quality Act (CEQA) and the County environmental guidelines. The Initial Study concluded that there is no evidence that the project may have a significant impact on the environment.

STAFF EVALUATION

General Plan/Community Plan Consistency

The project site is located within the Low-density (1-6du/ac) land use category of the Countywide General Plan. This designation is intended for the development of single-family residences. The proposed creation of two single-family residential parcels conforms to the density set forth by the land use designation and is therefore consistent with the permitted uses of the underlying land use category.

The project is consistent with the Countywide General Plan in the following ways:

- General Policy 47. *Promote the provision of an adequate supply of housing by location, type and price* (pg. I-24).

  Providing an additional single-family lot in an urban neighborhood supports this policy by providing the maximum number of single-family houses, in a largely built-out area, allowed by the designated land use category based on land area.

- General Policy 54. *Promote the full use of existing service systems in order to gain maximum benefit from previous public investments.* (pg. I-25).

  The proposed development maximizes land use efficiency by concentrating the same type of development in an area equipped to support said use. The proposed development will utilize existing service systems including transportation, sewer, water, school, libraries, and parks. Furthermore, one additional residence wouldn't overburden these services as the proposed density does not exceed the projected growth set forth by the Countywide General Plan.

- Land Use Policy 8. *Protect the character of residential neighborhoods by preventing the intrusion of incompatible uses that would cause environmental degradation such as excessive noise, noxious fumes, glare, shadowing, and traffic (pg. III-12).*

  The character of the existing residential neighborhood is low-density and composed of single-family residences. The proposed land use is single-family residential. The land use type and density is in keeping with the designated land use category. Further, the proposed lot width and street frontage of 53.97 feet (Parcel 1) and 53.98 feet (Parcel 2) are compatible with the existing neighborhood character as 42% of single-family residential parcels within 500

feet of the subject site have a minimum average lot width and street frontage of less than 60 feet.

Zoning Ordinance and Development Standards Compliance

The project site is located in the R-A (Residential-Agricultural) Zone. Single-family residences are permitted by right within this zone. The project site is also located in San Gabriel and subject to the East Pasadena-San Gabriel CSD. The East Pasadena-San Gabriel CSD was established to "protect the light, air, and privacy of existing residences,…and ensure that new development and expanded development is compatible with the unique identity of each neighborhood…"

Pursuant to Sections 22.44.090 and 22.44.100 of the County Code, establishments located in CSD boundaries are subject to the development standards set forth by the CSD.

Pursuant to Section 22.44.135D of the County Code, establishments in the East Pasadena-San Gabriel Community Standards District (CSD) are subject to the following development standards:

- Properties with less than 13,000 square feet are required to have a minimum average lot width and street frontage of 60 feet (§22.44.135(D)(1)). The applicant is proposing a lot width and street frontage of 53.97 feet for Parcel 1 and 53.98 feet for Parcel 2 equating to a 9% reduction from the CSD requirement.

Site Visit

A site visit was conducted on August 6, 2014. The inspection revealed outside storage of miscellaneous items between the back of the shed and the rear property line and an unpermitted overhead trellis/patio structure behind the house. During the visit, property owner, Kuei Yueh Hsu, confirmed one of the garage bays had been used as a storage room and the room had a window in place of the garage door. At the time of the inspection, the garage had been returned back to its intended use, but the garage interior was full of items preventing vehicular parking. Pictures submitted by the applicant on August 29, 2014 indicate all zoning violations have been abated.

Burden of Proof

The applicant is required to substantiate all facts identified by Section(s) 22.44.135(C)(4) of the County Code. The Burden of Proof with applicant's responses is attached. Staff is of the opinion that the applicant has met the burden of proof.

Neighborhood Impact/Land Use Compatibility

The proposed development of two single-family residential lots is compatible with the maximum density permitted by the Low Density Residential land use category of the Countywide Land Use Plan. The project is also consistent with the Subdivision Code and Zoning Code as modified by the CSD Modification. The subject property is

surrounded on all sides by compatible residential uses and has access to a County maintained street.

The existing neighborhood is composed of properties with less than 60 feet of lot width and street frontage and properties meeting the CSD standard representing a split of 42% and 48% respectively. The applicant is proposing a lot width and street frontage of 53.97 feet for Parcel 1 and 53.98 feet for Parcel 2. Thus, the proposed lot widths and street frontages are in keeping with the character of the surrounding properties.

No degradation of natural features will occur, as the subject property is located in an urbanized area and no sensitive resources are located on the site. Shopping and employment opportunities are available within a half mile of the subject property.

COUNTY DEPARTMENT COMMENTS AND RECOMMENDATIONS

The Los Angeles County Subdivision Committee consists of representatives of the Departments of Regional Planning, Public Works, Fire, Parks and Recreation, and Public Health. Based on the tentative map dated April 30, 2014, the Subdivision Committee cleared the project for public hearing. Awaiting zoning violations abatement, Regional Planning was the last agency to release its hold on September 24 2014. The Subdivision Committee Report, dated May 28, 2014, containing County Department comments is attached.

LEGAL NOTIFICATION AND PUBLIC OUTREACH

Pursuant to the provisions of Sections 22.60.174 and 22.60.175 of the County Code, the community was appropriately notified of the public hearing by mail, newspaper, property posting, library posting and Regional Planning website posting.

PUBLIC COMMENTS

Staff received one email in opposition of the project. The constituent expressed concern over eliminating an older home with architectural character from the area, proposing a standard sidewalk which currently does not exist in the neighborhood, and potentially reducing the “county tax valuation” by replacing the older home with newer homes.

FEES/DEPOSITS

If approved, fees identified in the attached project conditions will apply unless modified by the Regional Planning Commission.

STAFF RECOMMENDATION

The following recommendation is made prior to the public hearing and is subject to change based upon testimony and/or documentary evidence presented at the public hearing:

Staff recommends **APPROVAL** of Project Number R2013-02483, Tentative Parcel Map Number 072311 and CSD Modification No. 201400004 subject to the attached conditions.

SUGGESTED APPROVAL MOTION:

I MOVE THAT THE REGIONAL PLANNING COMMISSION CLOSE THE PUBLIC HEARING AND ADOPT THE NEGATIVE DECLARATION PURSUANT TO STATE AND LOCAL CEQA GUIDELINES

I MOVE THAT THE REGIONAL PLANNING COMMISSION APPROVE TENTATIVE PARCEL MAP NUMBER 072311 AND COMMUNITY STANDARDS DISTRICT MODIFICATION NUMBER 201300004 SUBJECT TO THE ATTACHED FINDINGS AND CONDITIONS

Prepared by Marie Pavlovic, Regional Planning Assistant II, Land Divisions Section
Reviewed by Nooshin Paidar, Supervising Regional Planner, Land Divisions Section

Attachments:
Draft Findings, Draft Conditions of Approval
Applicant's Burden of Proof statement
Correspondence
Initial Study
Site Photographs and Aerial Image
Site Plan, Land Use Map

NP:MP
01/28/15

DRAFT FINDINGS OF THE REGIONAL PLANNING COMMISSION
AND ORDER
COUNTY OF LOS ANGELES
PROJECT NO R2013 02483 (5)
TENTATIVE PARCEL MAP NO 072311

1. The Los Angeles County (“County”) Regional Planning Commission (“Commission”) conducted a duly-noticed public hearing on February 18, 2015 in the matter of Project No. R2013-02483, consisting of Tentative Parcel Map No. 072311 and Community Standards District (CSD) Modification No. 201300004.

2. Applicant Ramon Ronquillo, for property owner Kuei Yueh Hsu ("permittee"), requests the project permits to authorize the creation of two single-family lots on a property located at 8828 Ardendale Avenue in the unincorporated community of San Gabriel.

3. The project consists of a tentative parcel map request to create two single-family lots in the R-A zone pursuant to Los Angeles County Code (“County Code”) section 21.40.010 and a CSD Modification request to reduce the street frontage and average lot width from 60 feet to 53.97 feet for Parcel 1 and 53.98 feet for Parcel 2 within the East Pasadena-San Gabriel CSD pursuant to Los Angeles County Code ("County Code") section 22.44.135(C)(4).

4. The project site is 0.45 gross acres (0.37 net acres) in size and consists of one legal lot. The Project Site is rectangular in shape with relatively level topography and is developed with a variety of trees and short grasses.

5. The project site is located in the South Santa Anita-Temple City Zoned District and is currently zoned R-A.

6. The project site is located within the 1-Low Density Residential (1-6 du/ac) land use category of the Countywide General Plan Land Use Policy Map.

7. Surrounding Zoning within a 500-foot radius includes:

   North: R-1
   South: R-A & R-1
   East: R-A
   West: R-1

8. Surrounding land uses within a 500-foot radius include:

   North: 1-Low Density Residential (1-6 du/ac)
   South: 1-Low Density Residential (1-6 du/ac)
   East: 1-Low Density Residential (1-6 du/ac)
   West: 1-Low Density Residential (1-6 du/ac)

9. Lot Line Adjustment No. 101,883 recorded on January 5**,** 2001 resulting in the reshaping of subject site into a rectangular lot.

10. The Tentative Parcel Map dated April 30, 2014 depicts two single-family lots, each having a proposed net area of approximately 8259.70 net square feet. The existing single-family house with attached garage is proposed to be demolished and all other existing features such as the driveway, interior fence, water fountain, built-in BBQ, and storage shed will also be removed.

11. The Project Site is accessible via Ardendale Avenue.

12. During the project review process it was discovered and confirmed with a site inspection on August 6, 2014 that several zoning violations existed on-site. The applicant returned the garage back to vehicle parking, removed an unpermitted patio cover erected behind the house, took down the unpermitted carport that was located in the driveway, eliminated the miscellaneous items stored outside of an enclosed structure, moved the storage structure out of the required rear yard setback, and removed the over-height fence from the front yard. Pictures submitted by the applicant on August 29, 2014 indicate all zoning violations have been abated.

13. The conditions of the Subdivision Committee, comprised of the Departments of Regional Planning, Public Works, Fire, Parks and Recreation, and Public Health, are based on the map dated April 30, 2014.

14. Prior to the Commission's public hearing on the project, an Initial Study was prepared for the project in compliance with the California Environmental Quality Act (Public Resources Code section 21000.) ("CEQA"), the State CEQA Guidelines, and the Environmental Document Reporting Procedures and Guidelines for the County. Based on the Initial Study, staff from Regional Planning determined that a Negative Declaration was the appropriate environmental document for the project because the Initial Study concluded that there was no substantial evidence that the proposed project would result in a significant impact on the environment.

15. Pursuant to the provisions of sections 22.60.174 and 22.60.175 of the Zoning Code, the community was appropriately notified of the Project's public hearings by mail, newspaper, and property posting.

16. Staff received one email in opposition of the project. The constituent expressed concern over eliminating an older home with architectural character from the area, proposing a standard sidewalk which currently does not exist in the neighborhood, and potentially reducing the "county tax valuation" by replacing the older home with newer homes.

17. Hearing Proceedings

18. **GENERAL PLAN/COMMUNITY PLAN CONSISTENCY** The property has a land use category of "1" (Low Density Residential – 1 to 6 dwelling units per acre) under

the Countywide General Plan. Based on the size of the project site and application of the low-density residential land use category, the property may be developed with a maximum of two dwelling units. The applicant is proposing two single-family lots; therefore, the project's use and development intensity are consistent with the General Plan.

19. **ZONING ORDINANCE AND DEVELOPMENT STANDARDS COMPLIANCE** The property is zoned R-A (Residential-Agricultural – 5,000 square feet minimum lot area). The project site is 16,519.41 net square feet and the proposed lot sizes of 8,259.71 and 8,259.70 are allowed since they are greater than the 5,000 square-foot minimum required lot area set forth by the R-A zoning. The proposed development entails a subdivision of an existing residential lot into two lots and the demolition of the existing single-family residence and garage, in keeping with Section 22.20.410 of the County Code permitting single-family residences.

    Pursuant to Section 22.44.135 of the County Code, development in the East Pasadena-San Gabriel Community Standards District is subject to the development standards of the CSD. The East Pasadena-San Gabriel CSD was established to "protect the light, air, and privacy of existing residences, enhance aesthetics and community character, and ensure that new and expanded development is compatible with the unique identify of each neighborhood…." The CSD includes a variety of standards such as the imposition of greater minimum street frontage, minimum average lot width, yard setbacks, front yard landscaping, greater distances between buildings and property lines depending on building height, building height restriction, a maximum floor area and lot coverage, etc. meant to achieve the intent of the ordinance. The proposed land division involves a modification reducing the minimum street frontage and average lot width from 60 feet to 53.97 feet and 53.98 feet but conforms to all other applicable CSD development standards and County Code provisions. Additionally, future buildings are required to comply with all applicable Title 22 and CSD provisions.

20. **EAST PASADENA SAN GABRIEL COMMUNITY STANDARDS MODIFICATION REQUEST TO REDUCE THE STREET FRONTAGE AND AVERAGE LOT WIDTH**

    The East Pasadena-San Gabriel CSD requires lots with less than 13,000 net square feet to have a minimum street frontage and average lot width of 60 feet. The CSD also contains a provision, §22.44.135(C)(4), for modifying these development standards.

    A modification to the minimum street frontage and average lot width for each parcel would result in Parcel 1 having street frontage and an average lot width of 53.97 feet and Parcel 2 having street frontage and an average lot width of 53.98 feet, which are the same lot widths of the two parcels that share the rear property boundary. The parcel adjoining the easterly property boundary has a 50-foot long street frontage. Of the 114 parcels located within 500 feet from the subject property, 48 parcels (42%) have less than the required street frontage and average lot width of 60 feet indicating an established pattern. The applicant's request to reduce the minimum

average lot width and street frontage should not negatively affect the residential character of the neighborhood.

21. The proposed development consists of two single-family lots. Each proposed lot has sufficient net area to meet the minimum lot area requirements of 5,000 net square feet. The proposed development will comply with all East Pasadena-San Gabriel CSD development standards except for street frontage and average lot width which are requested to be modified. The creation of two single-family residential lots is compatible with the existing neighborhood character and the land use in the community.

Tentative Map Specific Findings

22. The Commission finds that the proposed subdivision and the provisions for its design and improvements are consistent with the goals and policies of the Los Angeles County General Plan. The project increases the supply of housing and promotes the efficient use of land through a more concentrated pattern of development.

23. The Commission finds that the site is physically suitable for the type of development being proposed, since the project site has the capacity to accommodate future single-family residences, is relatively level, and is adequately served by road and utility infrastructure.

24. The Commission finds that the discharge of sewage from this land division into the public sewer system will not violate the requirements of the California Water Quality Control Board pursuant to Division 7 (Commencing with Section 13000) of the Water Code. Public works has issued a conditional approval of the subject land division, and sewer service is available for the site.

25. The Commission finds that the design of the subdivision and the type of improvements will not cause serious public health problems, since sewage disposal, storm drainage, fire protection, and geologic and soils factors are addressed in the recommended conditions of approval.

26. The Commission finds that there is no substantial evidence, based on the record as a whole, that the proposed project will have potential for adverse effect on wildlife resources or the habitat upon which, either individually or cumulatively, the wildlife depends. The subject property does not contain any sensitive wildlife or habitat environments.

27. The Commission finds that the design of the subdivision provides to the extent feasible, for future passive or natural heating or cooling opportunities therein. Future structures built on the subject property after recordation of the subdivision will be required to comply with State and County Green Building standards, which regulate the heating and cooling efficiency of structures.

28. The Commission finds that the division and development of the property in the manner set forth on this map will not unreasonably interfere with the free and complete exercise of public entity and/or public utility rights-of-way and/or easements within this map, since the design and development as set forth in the conditions of approval and shown on the tentative map, provide adequate protection for any such easements.

29. The Commission finds that pursuant to Article 3.5 of the Subdivision Map Act, the proposed subdivision does not contain or front upon any public waterway, river, stream, coastline, shoreline, lake or reservoir.

30. The Commission finds that the housing and employment needs of the region were considered and balanced against the public service needs of local residents and available fiscal and environmental resources when the project was determined to be consistent with the General Plan.

<u>Community Standards District Modification Specific Findings</u>

31. The Commission finds that the proposed development is suitable for the subject site as the neighborhood is developed with the same single-family use.

32. The Commission finds that the requested modification is suitable from the standpoint of functional development design. The requested modification would result in rectangular-shaped lots and the two newly created lots would share the same lot widths as the two lots developed with single-family homes, 8903 and 8909 Camino Real, adjoining the rear lot line of the subject site.

33. The Commission finds that the modification request is consistent with the unique characteristics of the neighborhood in which the site is located since 42% of properties located within 500 feet of the subject site have street frontage and/or an average lot width of less than 60 feet.

34. The Commission finds that the requested CSD modification complies with all other applicable provisions of the County Code and the East Pasadena-San Gabriel CSD.

35. The Commission finds that pursuant to sections 22.60.174 and 22.60.175 of the County Code, the community was properly notified of the public hearing by mail, newspaper, and property posting. Additionally, the project was noticed and case materials were available on Regional Planning's website and at libraries located in the vicinity of the San Gabriel community. On January 12, 2015, a total of 367 Notices of Public Hearing were mailed to all property owners within a 1,000-foot radius from the project site, as identified on the County Assessor's record, including two constituents who are listed on the courtesy mailing list for the South Santa Anita-Temple City Zoned District.

Environmental Determination

36. The Commission finds that the permittee is subject to payment of the California Department of Fish and Wildlife fees related to the Project's effect on wildlife resources pursuant to section 711.4 of the California Fish and Game Code.

37. After consideration of the Negative Declaration together with the comments received during the public review process, the Commission finds on the basis of the whole record before it that there is no substantial evidence that the Project as conditioned will have a significant effect on the environment, and further finds that the environmental document reflects the independent judgment and analysis of the Commission.

38. The location of the documents and other materials constituting the record of proceedings upon which the Commission's decision is based in this matter is at the Los Angeles County Department of Regional Planning, 13th Floor, Hall of Records, 320 West Temple Street, Los Angeles, California 90012. The custodian of such documents and materials shall be the Section Head of the Land Divisions Section, Department of Regional Planning.

BASED ON THE FOREGOING, THE REGIONAL PLANNING COMMISSION CONCLUDES THAT:

A. That the proposed use with the attached conditions will be consistent with the adopted General Plan.

B. That the proposed use at the site will not adversely affect the health, peace, comfort or welfare of persons residing or working in the surrounding area, will not be materially detrimental to the use, enjoyment or valuation of property of other persons located in the vicinity of the site, and will not jeopardize, endanger or otherwise constitute a menace to the public health, safety or general welfare.

C. That the proposed site is adequate in size and shape to accommodate the yards, walls, fences, parking and loading facilities, landscaping and other development features prescribed in this Title 22 of the County Code, or as is otherwise required in order to integrate said use with the uses in the surrounding area.

D. That the proposed site is adequately served by highways or streets of sufficient width and improved as necessary to carry the kind and quantity of traffic such use would generate, and by other public or private service facilities as are required.

THEREFORE, THE REGIONAL PLANNING COMMISSION:

1. Certifies that the Negative Declaration for the Project was completed in compliance with CEQA and the State and County Guidelines related thereto; certifies that it independently reviewed and considered the Negative Declaration and that the Negative Declaration reflects the independent judgment and analysis of the Commission as to the environmental consequences of the Project; determined that

on the basis of the whole record before the Commission that there is no substantial evidence that the Project will have a significant effect on the environment; and adopts the Negative Declaration; and

2. Approves Tentative Parcel Map No. 072311 and Community Standards District Modification No. 201300004, subject to the attached conditions.

ACTION DATE: F 18, 2015

DRAFT CONDITIONS OF APPROVAL
COUNTY OF LOS ANGELES
PROJECT NO R2013 02483 (5)
TENTATIVE PARCEL MAP NO 072311

PROJECT DESCRIPTION

The project is a tentative parcel map to create two residential lots over 0.45 gross acres (19,758.51 square feet)/0.37 net acres (16,519.41 square feet). Community Standards District (CSD) Modification No. 201300004 authorizes modification to the East Pasadena-San Gabriel CSD to reduce the average lot width and street frontage from 60 feet to 53.97 feet for Parcel 1 and 53.98 feet for Parcel 2. Each lot will contain a minimum of 8,259.70 net square feet subject to the following conditions of approval:

GENERAL CONDITIONS

1. Unless otherwise apparent from the context, the term “subdivider” shall include the applicant, owner of the property, and any other person, corporation, or other entity making use of this grant.

2. This grant shall not be effective for any purpose until the subdivider, and the owner of the subject property if other than the subdivider, have filed at the office of the Los Angeles County ("County") Department of Regional Planning (“Regional Planning”) their affidavit stating that they are aware of and agree to accept all of the conditions of this grant, and until all required monies have been paid pursuant to Condition No. 11. Notwithstanding the foregoing, this Condition No. 2 and Condition Nos. 4, 5, and 11 shall be effective immediately upon the date of final approval of this grant by the County.

3. Unless otherwise apparent from the context, the term “date of final approval” shall mean the date the County's action becomes effective pursuant to Section 22.60.260 of the County Code.

4. The subdivider shall defend, indemnify, and hold harmless the County, its agents, officers, and employees from any claim, action, or proceeding against the County or its agents, officers, or employees to attack, set aside, void, or annul this permit approval, which action is brought within the applicable time period of Government Code Section 65009 or any other applicable limitations period. The County shall promptly notify the subdivider of any claim, action, or proceeding and the County shall reasonably cooperate in the defense. If the County fails to promptly notify the subdivider of any claim, action, or proceeding, or if the County fails to cooperate reasonably in the defense, the subdivider shall not thereafter be responsible to defend, indemnify, or hold harmless the County.

5. In the event that any claim, action, or proceeding as described above is filed against the County, the subdivider shall within ten days of the filing make an initial deposit with Regional Planning in the amount of up to $5,000.00, from which actual costs and expenses shall be billed and deducted for the purpose of defraying the costs or expenses involved in Regional Planning's cooperation in the defense,

including but not limited to, depositions, testimony, and other assistance provided to permittee or permittee's counsel.

If during the litigation process, actual costs or expenses incurred reach 80 percent of the amount on deposit, the subdivider shall deposit additional funds sufficient to bring the balance up to the amount of $5,000.00. There is no limit to the number of supplemental deposits that may be required prior to completion of the litigation.

At the sole discretion of the subdivider, the amount of an initial or any supplemental deposit may exceed the minimum amounts defined herein. Additionally, the cost for collection and duplication of records and other related documents shall be paid by the subdivider according to County Code Section 2.170.010.

6. If any material provision of this grant is held or declared to be invalid by a court of competent jurisdiction, the permit shall be void and the privileges granted hereunder shall lapse.

7. Upon any transfer or lease of the property during the term of this grant, the subdivider, or the owner of the subject property if other than the subdivider, shall promptly provide a copy of the grant and its conditions to the transferee or lessee of the subject property.

8. In the event that the subject tentative parcel map should expire without the recordation of a final map. Entitlement to the use of the property thereafter shall be subject to the regulations then in effect.

9. The subject property shall be maintained and operated in full compliance with the conditions of this grant and any law, statute, ordinance, or other regulation applicable to any development or activity on the subject property. Failure of the subdivider to cease any development or activity not in full compliance shall be a violation of these conditions. Inspections shall be made to ensure compliance with the conditions of this grant as well as to ensure that any development undertaken on the subject property is in accordance with the approved tentative map on file.

10. Prior to the issuance of any building permit(s), the subdivider shall remit all applicable library facilities mitigation fees to the County Librarian, pursuant to Chapter 22.72 of the County Code. The subdivider shall pay the fees in effect at the time of payment, pursuant to Section 22.72.030. Questions regarding fee payment can be directed to the County Librarian at (562) 940-8430. The subdivider shall provide proof of payment upon request from Regional Planning.

11. Within five (5) working days from the day after the appeal period ends (March 2, 2015), the permittee shall remit processing fees payable to the County of Los Angeles in connection with the filing and posting of a Notice of Determination (NOD) for this project and its entitlements in compliance with Section 21152 of the Public Resources Code. Unless a Certificate of Exemption is issued by the California Department of Fish and Wildlife pursuant to Section 711.4 of the

California Fish and Game Code, the permittee shall pay the fees in effect at the time of the filing of the NOD, as provided for in Section 711.4 of the Fish and Game Code, currently **2,25 25** ($2,181.25 for a Negative Declaration or Mitigated Negative Declaration plus $75.00 processing fee), or **3,104 75** ($3,029.75 for an Environmental Impact Report plus $75.00 processing fee.) (Beginning Jan. 1, 2015, the fees are **2,285 00** ($2,210.00 for a Negative Declaration or Mitigated Negative Declaration plus $75.00 processing fee), or **3,144 75** ($3,069.75 for an Environmental Impact Report plus $75.00 processing fee). No land use project subject to this requirement is final, vested or operative until the fee is paid.

12. Notice is hereby given that any person violating a provision of this grant is guilty of a misdemeanor. Notice is further given that the Regional Planning Commission ("Commission") or a Hearing Officer may, after conducting a public hearing, revoke or modify this grant, if the Commission or Hearing Officer finds that these conditions have been violated or that this grant has been exercised so as to be detrimental to the public's health or safety or so as to be a nuisance, or as otherwise authorized pursuant to Chapter 22.56, Part 13 of the County Code.

13. All development pursuant to this grant must be kept in full compliance with the County Fire Code to the satisfaction of said department.

14. All development pursuant to this grant shall conform with the requirements of the County Department of Public Works to the satisfaction of said department.

15. All development pursuant to this grant shall comply with the requirements of Title 22 of the County Code and of the specific zoning of the subject property, unless specifically modified by this grant, as set forth in these conditions.

16. The subdivider shall maintain the subject property in a neat and orderly fashion. The subdivider shall maintain free of litter all areas of the premises over which the subdivider has control.

17. All structures, walls and fences open to public view shall remain free of graffiti or other extraneous markings, drawings, or signage that was not approved by Regional Planning.

    In the event of graffiti or other extraneous markings occurring, the subdivider shall remove or cover said markings, drawings, or signage within 24 hours of notification of such occurrence, weather permitting. Paint utilized in covering such markings shall be of a color that matches, as closely as possible, the color of the adjacent surfaces.

PERMIT SPECIFIC CONDITIONS

The approval grants the creation of two single-family lots with an average lot width and street frontage of 53.97 feet for Parcel 1 and an average lot width and street frontage of 53.98 feet for Parcel 2 as depicted on the Tentative Parcel Map dated April 30, 2014.

18. Except as expressly modified herein, this approval is subject to all recommended conditions listed in the attached Subdivision Committee Report (tentative parcel map dated April 30, 2014), consisting of letters and reports from the Departments of Public Works, Fire, Parks and Recreation, and Public Health.

19. The project site shall be developed and maintained in substantial compliance with the approved tentative parcel map dated April 30, 2014.

20. A final map is required for this subdivision. A parcel map waiver is not allowed.

21. As required by section 21.32.195 of the County Code, the subdivider shall plant or cause to be planted at least four trees of non-invasive species within the front yard of each residential lot. The location and the species of said trees shall be incorporated into the site plan or landscape plan. Prior to final map approval, a site/landscaping plan shall be approved by the Director. The subdivider shall post a bond with Public Works, or submit other verification to the satisfaction of Regional Planning, ensuring future on-site tree planting.

22. Prior to final map approval, the subdivider shall submit evidence, including a demolition permit and photographs, that the existing structures and all accessory features related to the existing single-family residence have been removed (as annotated on the tentative parcel map dated 04/30/14).

23. Prior to final map approval, provide a copy of the Library Fees receipt.

24. Prior to final map approval, provide a copy of the Park Obligation Fees receipt.

25. Unless otherwise apparent from the context, the term “subdivider” shall include the applicant or any successor in interest, and any other person, corporation, or other entity making use of this grant.

Attachments:
Subdivision Committee Report and Conditions for Tentative Parcel Map Dated 04-30-2014

Department *of* Regional Planning
320 West Temple Street
Los Angeles, California 90012

PROJECT NUMBER
R2013-02483

HEARING DATE
TBD

REQUESTED ENTITLEMENTS
Tentative Parcel Map No. 072311
Community Standards District Modification No. 201300004
Environmental Assessment No. 201300205

SUBDIVISION COMMITTEE REPORT

OWNER / APPLICANT	MAP/EXHIBIT DATE:	SCM REPORT DATE:	SCM DATE:
Kuei Yueh Hsu/Ramon Ronquillo	04/30/14	05/28/14	06/05/14

PROJECT OVERVIEW

Subdivision: To create 2 single-family lots.

CSD Modification: To create 2 single-family lots with less than required street frontages and average lot widths of 60 feet as required by the East Pasadena-San Gabriel CSD.

MAP STAGE
Tentative: ☒ Revised: ☐ Amendment: ☐ Amended : ☐ Exhibit ñÀò Modification to : ☐ Recorded Map Other: ☐

MAP STATUS
Initial: ☐ 1st Revision: ☐ 2nd Revision: ☒ Additional Revisions (requires a fee): ☐

LOCATION
8828 Ardendale Avenue, San Gabriel, CA 91775

ACCESS
Ardendale Avenue

ASSESSORS PARCEL NUMBER(S)
5381-027-018

SITE AREA
0.37 Net Acres/0.45 Gross Acres

GENERAL PLAN / LOCAL PLAN
Countywide Land Use Plan

ZONED DISTRICT
SOUTH SANTA ANITA-TEMPLE CITY

SUP DISTRICT
5th

LAND USE DESIGNATION
1 ï Low Density Residential (1-6 du/ac)

ZONE
R-A (RESIDENTIAL-AGRICULTURAL)

CSD
EAST PASADENA ï SAN GABRIEL

PROPOSED UNITS (DU)
2

MAX DENSITY/UNITS (DU)
2

GRADING, CUBIC YARDS (CUT/FILL, IMPORT/EXPORT, ONSITE/OFFSITE)
No grading is proposed.

ENVIRONMENTAL DETERMINATION (CEQA)
Additional information is needed to proceed with the environmental review. See below for details.

SUBDIVISION COMMITTEE DEPARTMENT CLEARANCE

Department	Status	Contact
Regional Planning	Hold	Marie Pavlovic (213) 974-6433 mpavlovic@planning.lacounty.gov
Public Works	Cleared	Henry Wong (626) 458-4961 hwong@dpw.lacounty.gov
Fire	Cleared	Juan Padilla (323) 890-4243 jpadilla@fire.lacounty.gov
Parks & Recreation	Cleared	Clement Lau (213) 351-5120 clau@parks.lacounty.gov
Public Health	Cleared	Michelle Tsiebos (626)430-5381 mtsiebos@ph.lacounty.gov

SUBDIVISION COMMITTEE STATUS

Tentative Map Revision Required: ☐
Exhibit Map/Exhibit ñAò Revision Required: ☐
Revised Application Required: ☐
Reschedule for Subdivision Committee Meeting: ☐
Reschedule for Subdivision Committee Reports Only: ☐
Other Holds (see below): ☒

REGIONAL PLANNING ADDITIONAL COMMENTS AND HOLDS

Case Status/Recommendation: At this time, Regional Planning does not recommend approval of the tentative map. Additional information and a site inspection are needed to proceed with the environmental review and public hearing preparation. Please be aware that all zoning violations must be abated before a public hearing can be scheduled. Please read below for further details.

Zoning Code Compliance:

Clear ☐ Hold ☒

1. All existing zoning violations must be abated prior to the public hearing.
2. Assessor Records show the garage is 400 square feet. A garage of this size typically serves as a 2 car garage; however, the provided site photos depict only 1 garage door for single car access. Please provide color photos of the garage interior and a photo of the garage, taken from the driveway, with the garage door rolled up.
3. Site photos also depict what appears to be a wooden patio cover or overhead trellis. There doesnôt appear to be an associated building permit. Please provided photos of the patio area with overheard structure(s).
4. Site photos show a portable carport in the driveway. Please be aware that the garage must be accessible for the parking of vehicles at all times; therefore, structures and materials may not be placed in the driveway. Please remove the carport from the premises and any materials from the driveway.
5. Site pictures depict refuse and junk and salvage materials on the property. Please discard these materials or store valued materials within an enclosure.
6. There are structures labeled ñto be removedò in the rear setback (within 15ôof the rear property line). These structures must be moved out of the rear setback prior to public hearing.
7. The front yard fence is currently taller than the maximum height of 3.5ôpermitted by County Code. Also, hedges that form a barrier serving the same purpose as a fence or wall are subject to the height restrictions placed on fences and walls (§22.48.170). Please reduce the height of the front yard fence as well as hedges used as fencing to 3.5ôin the front yard and 6ôin the rear yard.

Environmental Determination:

Clear ☐ Hold ☒

1. Please provide the school verification form.
2. Aerial imagery show more trees in the front yard than depicted on the Tentative Map and Exhibit A. Please depict and label all tree species located on the property, and indicate whether the tree will remain or be removed.

Community Standards District:

Clear ☐ Hold ☒

1. Please revise the Burden of Proof map and statement, as 8855 and 8857 Ardendale Avenue were erroneously included in the ñLots With Less Than 60ô***Frontage***ò count. Although flag lots have less than 60ôof street frontage, they are specifically permitted by County Code and do not need special review. Please remove these lots from the Burden of Proof Map, assocated map notes, and revise the Burden of Proof statement accordingly.

Administrative/Other:

Clear ☐ Hold ☒

1. Please provide a letter signed by the property owner authorizing Ramon Ronquillo to prepare the tentative parcel map and sign the Land Division Application, dated 04/29/14, on her behalf. Please note that only the record title owner or applicant (subdivider) may sign sections 10 & 11 of the application.
2. Apart from the front yard fence, please clarify whether all other fences and walls are to remain.
3. The Tentative Map shows a 6ôiron fence; although, site pictures depict a chain-link fence. Please clarify the fence

material.

4. All existing zoning violations must be abated prior to the public hearing.

RESUBMITTAL INSTRUCTIONS

Please submit all requested materials directly to the case planner.

TENTATIVE MAP DATED 04-30-2014
EXHIBIT MAP DATED 04-30-2014

The following reports consisting of 9 pages are the recommendations of Public Works.

The subdivision shall conform to the design standards and policies of Public Works, in particular, but not limited to the following items:

1. Details and notes shown on the tentative map are not necessarily approved. Any details or notes which may be inconsistent with requirements of ordinances, general conditions of approval, or Department policies must be specifically approved in other conditions, or ordinance requirements are modified to those shown on the tentative map upon approval by the Advisory agency.

2. Easements are tentatively required, subject to review by the Director of Public Works to determine the final locations and requirements.

3. Easements shall not be granted or recorded within areas proposed to be granted, dedicated, or offered for dedication for public streets, highways, access rights, building restriction rights, or other easements until after the final map is filed with the Registrar-Recorder/County Clerk's Office. If easements are granted after the date of tentative approval, a subordination must be executed by the easement holder prior to the filing of the final map.

4. In lieu of establishing the final specific locations of structures on each lot/parcel at this time, the owner, at the time of issuance of a grading or building permit, agrees to develop the property in conformance with the County Code and other appropriate ordinances such as the Building Code, Plumbing Code, Grading Ordinance, Highway Permit Ordinance, Mechanical Code, Zoning Ordinance, Undergrounding of Utilities Ordinance, Water Ordinance, Sanitary Sewer and Industrial Waste Ordinance, Electrical Code, and Fire Code. Improvements and other requirements may be imposed pursuant to such codes and ordinances.

5. All easements existing at the time of final map approval must be accounted for on the approved tentative map. This includes the location, owner, purpose, and recording reference for all existing easements. If an easement is blanket or indeterminate in nature, a statement to that effect must be shown on the tentative map in lieu of its location. If all easements have not been accounted for, submit a corrected tentative map to the Department of Regional Planning for approval.

6. Adjust, relocate, and/or eliminate lot lines, lots, streets, easements, grading, geotechnical protective devices, and/or physical improvements to comply with ordinances, policies, and standards in effect at the date the County determined the application to be complete all to the satisfaction of Public Works.

7. If applicable, quitclaim or relocate easements running through proposed structures.

8. Remove existing buildings prior to final map approval. Demolition permits are required from the Building and Safety office.

9. A final parcel map must be processed through the Director of Public Works prior to being filed with the Registrar-Recorder/County Clerk's Office.

10. Prior to submitting the parcel map to the Director of Public Works for examination pursuant to Section 66450 of the Government Code, obtain clearances from all affected Departments and Divisions, including a clearance from the Subdivision Mapping Section of the Land Development Division of Public Works for the following mapping items; mathematical accuracy; survey analysis; and correctness of certificates, signatures, etc.

11. If signatures of record title interests appear on the final map, a preliminary guarantee is needed. A final guarantee will be required at the time of filing of the final map with the Registrar-Recorder/County Clerk's Office. If said signatures do not appear on the final map, a title report/guarantee is needed showing all fee owners and interest holders and this account must remain open until the final parcel map is filed with the Registrar-Recorder/County Clerk's Office.

12. Within 30 days of the approval date of this land use entitlement or at the time of first plan check submittal, the applicant shall deposit the sum of $2,000 (Minor Land Divisions) or $5,000 (Major Land Divisions) with Public Works to defray the cost of verifying conditions of approval for the purpose of issuing final map clearances. This deposit will cover the actual cost of reviewing conditions of approval for Conditional Use Permits, Tentative Tract and Parcel Maps, Vesting Tentative Tract and Parcel Maps, Oak Tree Permits, Specific Plans, General Plan Amendments, Zone Changes, CEQA Mitigation Monitoring Programs and Regulatory Permits from State and Federal Agencies (Fish and Game, USF&W, Army Corps, RWQCB, etc.) as they relate to the various plan check activities and improvement plan designs. In addition, this deposit will be used to conduct site field reviews and attend meetings requested by the applicant and/or his agents for the purpose of resolving technical issues on condition compliance as they relate to improvement plan design, engineering studies, highway alignment studies and tract/parcel map boundary, title and easement issues. When 80% of the deposit is expended, the applicant will be required to provide additional funds to restore the initial deposit. Remaining balances in the deposit account will be refunded upon final map recordation.

-HCW

Prepared by John Chin Phone (626) 458-4918 Date 05-19-2014

COUNTY OF LOS ANGELES
DEPARTMENT OF PUBLIC WORKS

900 SOUTH FREMONT AVENUE
ALHAMBRA, CALIFORNIA 91803-1331
WWW.DPW.LACOUNTY.GOV

PARCEL NO.: 072311

TENTATIVE MAP DATE: 04-30-2014
EXHIBIT MAP DATE: 04-30-2014

HYDROLOGY UNIT CONDITIONS OF APPROVAL, PHONE: (626) 458-4921

Approval to drainage is recommended with no drainage conditions (No grading is proposed on the Tentative Map or application).

Note: This clearance is only for the tentative map. If a Conditional Use Permit is required by the Department of Regional Planning, a hydrology study may be required prior to clearing the Conditional Use Permit.

Name _____ Date 05/19/14 Phone (626) 458-4921
Hazel Paraoan

County of Los Angeles Department of Public Works
GEOTECHNICAL AND MATERIALS ENGINEERING DIVISION
GEOLOGIC REVIEW SHEET
900 So. Fremont Ave., Alhambra, CA 91803
TEL. (626) 458-4925

DISTRIBUTION
__ Geologist
__ Soils Engineer
1 GMED File
1 Subdivision

TENTATIVE TRACT / PARCEL MAP 72311
SUBDIVIDER Hsu
ENGINEER CalLand Engineering, Inc.
GEOLOGIST ---
SOILS ENGINEER ---

TENTATIVE MAP DATED 4/30/14
LOCATION San Gabriel
GRADING BY SUBDIVIDER [N] (Y or N)
REPORT DATE ---
REPORT DATE ---

TENTATIVE MAP FEASIBILITY IS RECOMMENDED FOR APPROVAL FROM A GEOLOGIC STANDPOINT

THE FOLLOWING INFORMATION IS APPLICABLE TO THIS DIVISION OF LAND:

- The Final Map does ***not*** need to be reviewed by GMED.
- Soils engineering reports may be required prior to approval of building or grading plans.
- The Soils Engineering review dated 5-15-14 is attached.

Prepared by _____ Ricardo Lopez-Maldonado Reviewed by _____ Charles Nestle Date 13 May 2014

Please complete a Customer Service Survey at http://dpw.lacounty.gov/go/gmedsurvey

COUNTY OF LOS ANGELES
DEPARTMENT OF PUBLIC WORKS
GEOTECHNICAL AND MATERIALS ENGINEERING DIVISION

SOILS ENGINEERING REVIEW SHEET

Address: 900 S. Fremont Ave., Alhambra, CA 91803
Telephone: (626) 458-4925
Fax: (626) 458-4913

District Office ---
PCA LX001129
Sheet 1 of 1

Ungraded Site Lots

Tentative Parcel Map 72311
Location Ardendale Avenue, San Gabriel
Developer/Owner Hsu
Engineer/Architect CalLand Engineering, Inc.
Soils Engineer ---
Geologist ---

DISTRIBUTION:
___ Drainage
___ Grading
___ Geo/Soils Central File
___ District Engineer
___ Geologist
___ Soils Engineer
___ Engineer/Architect

Review of:

Tentative Parcel Map Dated by Regional Planning **4/30/14 (rev.)**
Previous Review Sheet Dated 9/24/13

ACTION:

Tentative Map feasibility is recommended for approval.

REGISTERED PROFESSIONAL ENGINEER
JEREMY CHUN YIN WAN
No. GE 2849
Exp. 6-30-15
GEOTECHNICAL
STATE OF CALIFORNIA

Prepared by Jeremy Wan Date 5/15/14

Please complete a Customer Service Survey at http://dpw.lacounty.gov/gmed/survey.
NOTICE: Public safety, relative to geotechnical subsurface exploration, shall be provided in accordance with current codes for excavations, inclusive of the Los Angeles County Code, Chapter 11.48, and the State of California, Title 8, Construction Safety Orders.
P:\gmepub\Development Review\Soils Review\Jeremy\PR 72311, Ardendale Avenue, San Gabriel, TPM-A_2.doc

COUNTY OF LOS ANGELES
DEPARTMENT OF PUBLIC WORKS
LAND DEVELOPMENT DIVISION – GRADING

PARCEL MAP NO. 072311

TENTATIVE MAP DATED 04/30/2014
EXHIBIT MAP DATED 04/30/2014

Approval of this map pertaining to grading is recommended with no conditions.

Name Nazem Said Date 5/19/2014 Phone (626) 458-4921

P:\ldpub\SUBPCHECK\Plan Checking Files\Parcel Map\PM 072311\GP 072311\2014-05-01 TPM 072311 SUBMITTAL

COUNTY OF LOS ANGELES
DEPARTMENT OF PUBLIC WORKS
LAND DEVELOPMENT DIVISION – ROAD

PARCEL MAP NO. 072311(Rev.) TENTATIVE MAP DATED 04-30-2014

The subdivision shall conform to the design standards and policies of Public Works, in particular, but not limited to the following items:

1. Dedicate right of way 30 feet from the centerline on Ardendale Avenue (if not already dedicated) to the satisfaction of Public Works. A review fee is required.

2. Construct street improvements along the property frontage on Ardendale Avenue to include base, pavement, curb and gutter 18 feet from the centerline, sidewalk (5 feet minimum, adjacent to the property line) and drainage improvements to the satisfaction of Public Works.

3. Construct parkway improvements (sidewalk, driveway, landings, etc.) that either serve or form a part of a Pedestrian Access Route to meet current Americans with Disabilities Act (ADA) requirements to the satisfaction of Public Works.

4. Construct transition improvements on Ardendale Avenue adjacent to the property to the satisfaction of Public Works.

5. Close any unused driveway with standard curb, gutter, and sidewalk along the property frontage on Ardendale Avenue.

6. Plant street trees along the property frontage on Ardendale Avenue to the satisfaction of Public Works.

7. The typical sections shown are not necessarily approved.

8. Submit street improvement plans for review and approval. A review fee is required.

9. Underground all new utility lines to the satisfaction of Public Works and Southern California Edison. Please contact Construction Division at (626) 458-3129 for new location of any above ground utility structure in the parkway.

10. Prior to final map approval, enter into an agreement with the County franchised cable TV operator (if an area is served) to permit the installation of cable in a common utility trench to the satisfaction of Public Works; or provide documentation that steps to provide cable TV to the proposed subdivision have been initiated to the satisfaction of Public Works.

11. Install postal delivery receptacles in groups to serve two or more residential units.

Prepared by Sam Richards Phone (626) 458-4921 Date 05-22-2014
pm72311r-rev2.doc

COUNTY OF LOS ANGELES
DEPARTMENT OF PUBLIC WORKS
LAND DEVELOPMENT DIVISION - SEWER
PARCEL MAP NO. 072311(Rev.)

TENTATIVE MAP DATED 04-30-2014
EXHIBIT MAP DATED 04-30-2014

The subdivision shall conform to the design standards and policies of Public Works, in particular, but not limited to the following items:

1. The subdivider shall install separate house laterals to serve each parcel in the land division. Installation and dedication of main line sewers may be necessary to meet this requirement.

2. A sewer area study for the proposed subdivision (PC 12207 AS, dated 01-14-2014) was reviewed and approved. No additional mitigation measures are required. The sewer area study shall be invalidated should the total number of dwelling units increase, the density increase , change in the proposed sewer alignment, increase in tributary sewershed, change of the sewer collection points, or the adoption of a land use plan or a revision to the current plan. A revision to the approved sewer area study may be allowed at the discretion of the Director of Public Works. The approved sewer area study shall remain valid for two years after initial approval of the tentative map. After this period of time, an update of the area study shall be submitted by the applicant if determined to be warranted by Public Works.

3. The subdivider shall send a print of the land division map to the County Sanitation District with a request for annexation. The request for annexation must be approved prior to final map approval.

Prepared by Tony Khalkhali Phone (626) 458-4921 Date 05-22-2014

pm72311s-rev2.doc

COUNTY OF LOS ANGELES
DEPARTMENT OF PUBLIC WORKS
LAND DEVELOPMENT DIVISION - WATER
PARCEL MAP NO. 72311(Rev.)

TENTATIVE MAP DATED 04-30-2014
EXHIBIT MAP DATED 04-30-2014

The subdivision shall conform to the design standards and policies of Public Works, in particular, but not limited to the following items:

1. A water system maintained by the water purveyor, with appurtenant facilities to serve all parcels in the land division, must be provided. The system shall include fire hydrants of the type and location (both on-site and off-site) as determined by the Fire Department. The water mains shall be sized to accommodate the total domestic and fire flows.

2. There shall be filed with Public Works a statement from the water purveyor indicating that the water system will be operated by the purveyor, and that under normal conditions, the system will meet the requirements for the and division, and that water service will be provided to each parcel.

Prepared by Tony Khalkhali Phone (626) 458-4921 Date 05-22-2014
pm72311w-rev2.doc

COUNTY OF LOS ANGELES FIRE DEPARTMENT
FIRE PREVENTION DIVISION

Land Development Unit
5823 Rickenbacker Road
Commerce, CA 90040
Telephone (323) 890-4243, Fax (323) 890-9783

PROJECT: TR 72311 MAP DATE: April 30, 2014

THE FIRE DEPARTMENT RECOMMENDS APPROVAL OF THIS PROJECT AS PRESENTLY SUBMITTED WITH THE FOLLOWING CONDITIONS OF APPROVAL

CONDITIONS OF APPROVAL ACCESS

1. The future buildings shall be located within 150 feet of all exterior walls of the first story from an approved fire apparatus access road. This measurement shall be by an approved route around the exterior of the building. Compliance required when architectural plans are submitted to the Fire Department for review and approval prior to building permit issuance.

2. The future buildings shall provide approved address numbers for each unit in compliance with the Department of Public Works and the County of Los Angeles Fire Code requirements prior to occupancy.

3. Access as noted on the Tentative and the Exhibit Maps shall comply with Title 21 (County of Los Angeles Subdivision Code) and Section 503 of the Title 32 (County of Los Angeles Fire Code), which requires all weather access.

CONDITIONS OF APPROVAL WATER

4. The required fire flow from the public fire hydrant(s) for this development is **1250** gallons per minute at 20 pounds per square inch for a duration of 2 hours. Per the fire flow test performed by Sunny Slope Water Company on 11/25/13, the existing water system can supply the required fire flow. This required fire flow shall be maintained for the duration of the development.

5. An approved automatic fire sprinkler system is required for all future building within this development. Submit design plans to the Fire Department Sprinkler Plan Check Unit for review and approval prior to installation.

Reviewed by: Juan Padilla Date: May 27, 2014

COUNTY OF LOS ANGELES FIRE DEPARTMENT
FIRE PREVENTION DIVISION

Land Development Unit
5823 Rickenbacker Road
Commerce, CA 90040
Telephone (323) 890-4243, Fax (323) 890-9783

PROJECT: TR 72311 MAP DATE: April 30, 2014

For any questions regarding the report, please contact Juan Padilla at (323) 890-4243 or Juan.Padilla@fire.lacounty.gov.

Reviewed by: Juan Padilla Date: May 27, 2014

LOS ANGELES COUNTY
DEPARTMENT OF PARKS AND RECREATION

PARK OBLIGATION REPORT

Tentative Map # **72311**	DRP Map Date: **04/30/2014**	SCM Date: **06/05/2014**	Report Date: **05/21/2014**
Park Planning Area # **42**	**WEST SAN GABRIEL VALLEY**		Map Type: **TENTATIVE**

Total Units **2** = Proposed Units **1** + Exempt Units **1**

Sections 21.24.340, 21.24.350, 21.28.120, 21.28.130, and 21.28.140, the County of Los Angeles Code, Title 21, Subdivision Ordinance provide that the County will determine whether the development's park obligation is to be met by:

1) the dedication of land for public or private park purpose or,
2) the payment of in-lieu fees or,
3) the provision of amenities or any combination of the above.

The specific determination of how the park obligation will be satisfied will be based on the conditions of approval by the advisory agency as recommended by the Department of Parks and Recreation.

Park land obligation in acres or in-lieu fees:

ACRES:	**0.01**
IN-LIEU FEES:	**$4,359**

Conditions of the map approval:

The park obligation for this development will be met by:

The payment of $4,359 in-lieu fees.

Trails:

No trails.

Comments:

Proposing one single family unit with one existing house to be removed

*****Advisory:**

The Representative Land Value (RLVs) in Los Angeles County Code (LACC) Section 21.28.140 are used to calculate park fees and are adjusted annually, based on changes in the Consumer Price Index. The new RLVs become effective July 1st of each year and may apply to this subdivision map if first advertised for hearing before either a hearing officer or the Regional Planning Commission on or after July 1st pursuant to LACC Section 21.28.140, subsection 3. Accordingly, the park fee in this report is subject to change depending upon when the subdivision is first advertised for public hearing.

Please contact Clement Lau at (213) 351-5120 or Sheela Mathai at (213) 351-5121, Department of Parks and Recreation, 510 South Vermont Avenue, Los Angeles, CA 90020 for further information or to schedule an appointment to make an in-lieu fee payment.

For information on Hiking and Equestrian Trail requirements, please contact the Trails Coordinator at (213) 351-5134.

By: James Barber

James Barber, Land Acquisition & Development Section

Supv D 5th
May 21, 2014 10:41:00
QMB02F.FRX

LOS ANGELES COUNTY
DEPARTMENT OF PARKS AND RECREATION

PARK OBLIGATION WORKSHEET

Tentative Map # **72311**	DRP Map Date: **04/30/2014**	SMC Date: **06/05/2014**	Report Date: **05/21/2014**
Park Planning Area # **42**	**WEST SAN GABRIEL VALLEY**		Map Type: **TENTATIVE**

The formula for calculating the acreage obligation and or In-lieu fee is as follows:

(P)eople x (0.003) Ratio x (U)nits = (X) acres obligation

(X) acres obligation x RLV/Acre = In-Lieu Base Fee

Where: P = Estimate of number of People per dwelling unit according to the type of dwelling unit as determined by the 2000 U.S. Census*. Assume * people for detached single-family residences; Assume * people for attached single-family (townhouse) residences, two-family residences, and apartment houses containing fewer than five dwelling units; Assume * people for apartment houses containing five or more dwelling units; Assume * people for mobile homes.

Ratio = The subdivision ordinance provides a ratio of 3.0 acres of park land for each 1,000 people generated by the development. This ratio is calculated as "0.0030" in the formula.

U = Total approved number of Dwelling Units.

X = Local park space obligation expressed in terms of acres.

RLV/Acre = Representative Land Value per Acre by Park Planning Area.

Total Units **2** = Proposed Units **1** + Exempt Units **1**

	People*	Ratio 3.0 Acres / 1000 People	Number of Units	Acre Obligation
Detached S.F. Units	**3.11**	**0.0030**	**1**	**0.01**
M.F. < 5 Units	2.27	0.0030	0	0.00
M.F. >= 5 Units	2.42	0.0030	0	0.00
Mobile Units	0.99	0.0030	0	0.00
Exempt Units			**1**	
			Total Acre Obligation =	**0.01**

Park Planning Area = **42** **WEST SAN GABRIEL VALLEY**

Ratio	Acre Obligation	RLV / Acre	In-Lieu Base Fee
@(0.0030)	0.01	$435,907	**$4,359**

Lot #	Provided Space	Provided Acres	Credit (%)	Acre Credit	Land
None					
			Total Provided Acre Credit:	**0.00**	

Acre Obligation	Public Land Crdt.	Priv. Land Crdt.	Net Obligation	RLV / Acre	**In-Lieu Fee Due**
0.01	0.00	0.00	0.01	$435,907	**$4,359**

Supv D 5th
May 21, 2014 10:41:04
QMB01F.FRX

COUNTY OF LOS ANGELES
Public Health

JONATHAN E. FIELDING, M.D., M.P.H.
Director and Health Officer

CYNTHIA A. HARDING, M.P.H.
Chief Deputy Director

ANGELO J. BELLOMO, REHS
Director of Environmental Health

TERRI S. WILLIAMS, REHS
Assistant Director of Environmental Health

5050 Commerce Drive
Baldwin Park, California 91706
TEL (626) 430-5100 • FAX (626) 813-3000

www.publichealth.lacounty.gov

BOARD OF SUPERVISORS

Gloria Molina
First District

Mark Ridley-Thomas
Second District

Zev Yaroslavsky
Third District

Don Knabe
Fourth District

Michael D. Antonovich
Fifth District

May 16, 2014

Tentative Parcel Map No. 072311

Vicinity: San Gabriel

Tentative Parcel Map Date: April 30, 2014

The Los Angeles County Department of Public Health – Environmental Health Division approves **Tentative Parcel Map 072311** based on the use of public water (Sunny Slope Water Company) and public sewer (County of Los Angeles Sanitation District No. 15) as proposed. Any variation from the approved method of sewage disposal and/or approved use of public water shall invalidate the Department's approval.

Prepared by:

MICHELLE TSIEBOS, MPA, REHS (M.T)
Environmental Health Specialist IV
Land Use Program
5050 Commerce Drive
Baldwin Park, California 91706
TEL (626) 430-5382 • FAX (626) 813-3016

EAST PASADENA-SAN GABRIEL COMMUNITY STANDARDS DISTRICT (CSD) MODIFICATION BURDEN OF PROOF

Pursuant to Zoning Code Section 22.44.135.C.4, the applicant shall substantiate the following:

(Do not repeat the statement or provide Yes/No responses. If necessary, attach additional pages.)

A. Address how the principles and standards of Section 22.56.1690 are met, which are that the use, development of land and/or application of development standards are:

1. In compliance with all applicable provisions of Title 22;
2. When considered on the basis of suitability of the site for the particular use or development intended, is so arranged as to avoid traffic congestion, insure the protection of public health, safety and general welfare, prevent adverse effects on neighboring property, and is in conformity with good zoning practice; and
3. Is suitable from the standpoint of functional developmental design.

Future construction will not change the zoning and use, therefore not adversely affect the character of the established community. Design of the future construction will follow building codes and the CSD to ensure compatibility with surrounding uses. Although there will be an additional unit in the future, its effect on existing public services and facilities will be minimal. Its effect on current traffic and parking conditions will be minimal. Future on-site parking design will ensure existing parking conditions will not be impacted.

B. Describe how each modification request is consistent with the unique characteristics of the neighborhood in which the site is located (i.e. topographic features, lot design, setbacks, height, floor area, lot coverage, etc.). Please include addresses, specific description of the structure(s) and circumstances involved. Include photos and sketches if necessary.

The proposal to subdivide the lot into two with both average lot widths and frontage less than 60' is consistent with the characteristics of the neighborhood. Per attached map, there are 48 lots of less than 60' average lot width and 48 lots of less than 60' frontage within 500' of the property. The property will also be subdivided into two lots with its average lot width and frontage being almost equal to that of the lots behind it (8903 & 8909 Camino Real). Future construction will comply with the current CSD.

Most recent BOP

BURDEN OF PROOF MAP

LEGEND:

PROPERTY WITH EITHER LESS THAN 60' LOT AVE WIDTH OR 60' LOT FRONTAGE

8888 ← ADDRESS
60 ← LOT AVERAGE WIDTH
60 ← LOT FRONTAGE
STREET

LOTS WITH LESS THAN 60' LOT WIDTH WITHIN 500' OF 8828 ARDENDALE

–LOTUS AVE (1 TOTAL): 6731
–YOUNGDALE ST (11 TOTAL): 8803, 8809, 8815, 8819, 8823, 8829, 8843, 8847, 8902, 8908, 8914
–ARDENDALE AVE (6 TOTAL): 8838, 8844, 8853, 8859, 8915, 8921
–CAMINO REAL (16 TOTAL): 8902, 8903, 8906, 8909, 8910, 8915, 8920, 8921, 8924, 8925, 8927, 8928, 8954, 8958, 8961, 8965
–CALLITA AVE (13 TOTAL): 8851, 8855, 8861, 8867, 8873, 8879, 8883, 8903, 8907, 8931, 8937, 8941, 8947
–SULTANA AVE (1 TOTAL): 6617

TOTAL LOTS: 48

LOTS WITH LESS THAN 60' FRONTAGE WITHIN 500' OF 8828 ARDENDALE

–LOTUS AVE (2 TOTAL): 6731, 6733
–YOUNGDALE ST (11 TOTAL): 8803, 8809, 8815, 8819, 8823, 8829, 8843, 8847, 8902, 8908, 8914
–ARDENDALE AVE (6 TOTAL): 8838, 8844, 8853, 8859, 8915, 8921
–CAMINO REAL (15 TOTAL): 8902, 8903, 8906, 8909, 8910, 8915, 8920, 8921, 8924, 8925, 8927, 8928, 8954, 8961, 8965
–CALLITA AVE (13 TOTAL): 8851, 8855, 8861, 8867, 8873, 8879, 8883, 8903, 8907, 8931, 8937, 8941, 8947
–SULTANA AVE (1 TOTAL): 6617

TOTAL LOTS: 48

TOTAL NUMBER OF LOTS WITHIN 500' OF 8828 ARDENDALE: 114

N

0 30 60

1"=60'

Environmental Checklist Form (Initial Study)
County of Los Angeles, Department of Regional Planning

Project title: R2013-02483/Tentative Parcel Map No. 072311/Community Standards District Modification No. 201300004/Environmental Assessment No. 201300205

Lead agency name and address: Los Angeles County, 320 West Temple Street, Los Angeles, CA 90012

Contact Person and phone number: Marie Pavlovic/(213) 974-6433

Project sponsor's name and address: Kuei Yueh Hsu, 8828 Ardendale Avenue, San Gabriel, CA 91775

Project location: 8828 Ardendale Avenue
APN: 5381-027-048 *USGS Quad:* El Monte

Gross Acreage: 0.45 gross/0.37 net acres

General plan designation: 1-Low Density Residential (1-6 du/ac)

Community/Area wide Plan designation: NA

Zoning: R-A (Residential Agricultural)/East Pasadena-San Gabriel Community Standards District

Description of project: The project consists of a tentative parcel map to create two single-family lots on 16,519 net square feet and a Community Standards District (CSD) modification to allow reduced street frontage and lot width of 54 feet instead of the required 60 feet. Each parcel is proposed to be 8,529.7 net square feet. The existing single-family residence and accessory structures will be demolished prior to final map recordation. There are no oak trees on site and no grading is proposed.

Surrounding land uses and setting: Surrounding properties are zoned R-A and R-1 and developed with single-family residences.

Other public agencies whose approval may be required (e.g., permits, financing approval, or participation agreement):

Public Agency	*Approval Required*
Department of Public Works	Demolition Permit
Department of Public Works	Final Map

Major projects in the area:

Project/Case No.	*Description and Status*
None	N/A

Reviewing Agencies:

Responsible Agencies

- [x] None

Regional Water Quality Control Board:

- [ ] Los Angeles Region
- [ ] Lahontan Region
- [ ] Coastal Commission
- [ ] Army Corps of Engineers

Special Reviewing Agencies

- [x] None
- [ ] Santa Monica Mountains Conservancy
- [ ] National Parks
- [ ] National Forest
- [ ] Edwards Air Force Base
- [ ] Resource Conservation District of Santa Monica Mountains Area
- [ ] California State University, Fullerton
  - California Historical Resources Information Center

Regional Significance

- [x] None
- [ ] SCAG Criteria
- [ ] Air Quality
- [ ] Water Resources
- [ ] Santa Monica Mtns. Area
- [ ]

Trustee Agencies

- [ ] None
- [ ] State Dept. of Fish and Wildlife
- [ ] State Dept. of Parks and Recreation
- [ ] State Lands Commission
- [ ] University of California (Natural Land and Water Reserves System)

County Reviewing Agencies

- [x] DPW:
  - Land Development Division (Grading & Drainage)
  - Geotechnical & Materials Engineering Division
  - Watershed Management Division (NPDES)
  - Traffic and Lighting Division
  - Environmental Programs Division
  - Waterworks Division
  - Sewer Maintenance Division
- [x] Fire Department
  - Planning Division
  - Land Development Unit
- [ ] Sanitation District
- [x] Public Health/Environmental Health Division: Land Use Program (OWTS), Drinking Water Program (Private Wells),)
- [ ] Sheriff Department
- [x] Parks and Recreation
- [ ] Subdivision Committee

ENVIRONMENTAL FACTORS POTENTIALLY AFFECTED:

The environmental factors checked below would be potentially affected by this project.

☐ Aesthetics	☐ Greenhouse Gas Emissions	☐ Population/Housing
☐ Agriculture/Forest	☐ Hazards/Hazardous Materials	☐ Public Services
☐ Air Quality	☐ Hydrology/Water Quality	☐ Recreation
☐ Biological Resources	☐ Land Use/Planning	☐ Transportation/Traffic
☐ Cultural Resources	☐ Mineral Resources	☐ Utilities/Services
☐ Energy	☐ Noise	☐ Mandatory Findings of Significance
☐ Geology/Soils		

DETERMINATION: (To be completed by the Lead Department.)
On the basis of this initial evaluation:

☒ I find that the proposed project COULD NOT have a significant effect on the environment, and a NEGATIVE DECLARATION will be prepared.

☐ I find that although the proposed project could have a significant effect on the environment, there will not be a significant effect in this case because revisions in the project have been made by or agreed to by the project proponent. A MITIGATED NEGATIVE DECLARATION will be prepared.

☐ I find that the proposed project MAY have a significant effect on the environment, and an ENVIRONMENTAL IMPACT REPORT is required.

☐ I find that the proposed project MAY have a "potentially significant impact" or "potentially significant unless mitigated" impact on the environment, but at least one effect 1) has been adequately analyzed in an earlier document pursuant to applicable legal standards, and 2) has been addressed by mitigation measures based on the earlier analysis as described on attached sheets. An ENVIRONMENTAL IMPACT REPORT is required, but it must analyze only the effects that remain to be addressed.

☐ I find that although the proposed project could have a significant effect on the environment, because all potentially significant effects (a) have been analyzed adequately in an earlier EIR or NEGATIVE DECLARATION pursuant to applicable standards, and (b) have been avoided or mitigated pursuant to that earlier EIR or NEGATIVE DECLARATION, including revisions or mitigation measures that are imposed upon the proposed project, nothing further is required.

Signature (Prepared by) — Date: 02/04/15

Noushin Paidar
Signature (Approved by) — Date: 2/5/15

EVALUATION OF ENVIRONMENTAL IMPACTS:

1) A brief explanation is required for all answers except "No Impact" answers that are adequately supported by the information sources the Lead Department cites in the parentheses following each question. A "No Impact" answer is adequately supported if the referenced information sources show that the impact simply does not apply to projects like the one involved (e.g., the project falls outside a fault rupture zone). A "No Impact" answer should be explained where it is based on project-specific factors as well as general standards (e.g., the project will not expose sensitive receptors to pollutants, based on a project-specific screening analysis).

2) All answers must take account of the whole action involved, including off-site as well as on-site, cumulative as well as project-level, indirect as well as direct, and construction as well as operational impacts.

3) Once the Lead Department has determined that a particular physical impact may occur, then the checklist answers must indicate whether the impact is potentially significant, less than significant with mitigation, or less than significant. "Potentially Significant Impact" is appropriate if there is substantial evidence that an effect may be significant. If there are one or more "Potentially Significant Impact" entries when the determination is made, an EIR is required.

4) "Negative Declaration: Less Than Significant With Mitigation Incorporated" applies where the incorporation of mitigation measures has reduced an effect from "Potentially Significant Impact" to a "Less Than Significant Impact." The lead agency must describe the mitigation measures, and briefly explain how they reduce the effect to a less than significant level. (Mitigation measures from Section XVII, "Earlier Analyses," may be cross-referenced.)

5) Earlier analyses may be used where, pursuant to the tiering, program EIR, or other CEQA processes, an effect has been adequately analyzed in an earlier EIR or negative declaration. (State CEQA Guidelines § 15063(c)(3)(D).) In this case, a brief discussion should identify the following:

   a) Earlier Analysis Used. Identify and state where they are available for review.

   b) Impacts Adequately Addressed. Identify which effects from the above checklist were within the scope of, and adequately analyzed in, an earlier document pursuant to applicable legal standards, and state whether such effects were addressed by mitigation measures based on the earlier analysis.

   c) Mitigation Measures. For effects that are "Less than Significant with Mitigation Measures Incorporated," describe the mitigation measures which were incorporated or refined from the earlier document and the extent to which they address site-specific conditions for the project.

6) Supporting Information Sources: A source list should be attached, and other sources used or individuals contacted should be cited in the discussion.

7) The explanation of each issue should identify: the significance threshold, if any, used to evaluate each question, and; mitigation measures identified, if any, to reduce the impact to less than significance. Sources of thresholds include the County General Plan, other County planning documents, and County ordinances. Some thresholds are unique to geographical locations.

8) Climate Change Impacts: When determining whether a project's impacts are significant, the analysis should consider, when relevant, the effects of future climate change on : 1) worsening hazardous conditions that pose risks to the project's inhabitants and structures (e.g., floods and wildfires), and 2) worsening the project's impacts on the environment (e.g., impacts on special status species and public health).

1. AESTHETICS

Would the project:	*Potentially Significant Impact*	*Less Than Significant Impact with Mitigation Incorporated*	*Less Than Significant Impact*	*No Impact*
a) Have a substantial adverse effect on a scenic vista?	☐	☐	☐	☒

There are no significant scenic vistas or ridgelines located on or near the subject property. The edge of Angeles Forest is located more than 4 miles north of the project site. The project site is located within an established urbanized residential community and the creation of 2 single-family parcels from a level single-family lot will not have an adverse effect on elevated viewpoints.

b) Be visible from or obstruct views from a regional riding or hiking trail?	☐	☐	☒	☐

There are no regional hiking trails on, or in the vicinity of, the property. The 2012 Master Plan of Bikeways proposes Class 3 bike routes along Ardendale Avenue; Duarte Road to the North; and Muscatel Avenue to the west and a Class 2 bike lane along Rosemead Blvd to the east (Source: Department of Public Works). The project will be visible from the Class 3 bike route along Ardendale as Ardendale is the access street to and from the property.

c) Substantially damage scenic resources, including, but not limited to, trees, rock outcroppings, and historic buildings within a state scenic highway?	☐	☐	☐	☒

The project site is not located near, and cannot be viewed from, any scenic highways, ridgelines or view sheds. The project also cannot be viewed from any officially adopted trails and does not contain rock-outcroppings or registered historic buildings. Additionally, no trees are proposed to be removed as part of the subdivision request.

d) Substantially degrade the existing visual character or quality of the site and its surroundings because of height, bulk, pattern, scale, character, or other features?	☐	☐	☒	☐

The applicant is requesting to create two single-family lots with a reduction in street frontage and average lot width. The East Pasadena-San Gabriel CSD requires a minimum of 60 feet for both dimensions and the applicant is proposing nearly 54 feet. The requested reduction will not introduce a new development pattern to the area as approximately 42% of single-family residential lots, within a 500-foot radius, have less than the required street frontage and average lot width of 60 feet. Lots similar in size and scale are located to the northwest, north, south, and east of subject site. Since the proposed project will conform to all other CSD requirements, it should not substantially degrade the existing visual character or quality of the site and its surroundings.

e) Create a new source of substantial shadows, light, or glare which would adversely affect day or nighttime views in the area?	☐	☐	☒	☐

The applicant is requesting to create two single-family lots with a reduction in street frontage and average lot width. Although the applicant is requesting lesser street frontage and lot width, the project will conform to all other Title 22 and East Pasadena-San Gabriel CSD requirements including meeting the minimum required area, building setbacks, and prescribed height limitations. Title 22 also prohibits residential structures from using glossy, reflective, or polished metal exterior siding to avoid creating new glare sources. Compliance with these development standards should prevent the creation of substantial shadows, glare, and light.

2. AGRICULTURE / FOREST

Would the project:	*Potentially Significant Impact*	*Less Than Significant Impact with Mitigation Incorporated*	*Less Than Significant Impact*	*No Impact*
a) Convert Prime Farmland, Unique Farmland, or Farmland of Statewide Importance (Farmland), as shown on the maps prepared pursuant to the Farmland Mapping and Monitoring Program of the California Resources Agency, to non-agricultural use?	☐	☐	☐	☒

The project site is not comprised of any farmland. The construction of the residential building in an already established urbanized area will not result in the conversion of Prime Farmland, Unique Farmland, or any other types of Farmland (Source: Farmland Mapping and Monitoring Program, California Department of Conservation).

b) Conflict with existing zoning for agricultural use, with a designated Agricultural Opportunity Area, or with a Williamson Act contract?	☐	☐	☐	☒

The project site is zoned Residential Agricultural; however, the site is not currently used for agricultural purposes and single-family residences are permitted in such zones. The project site is not designated as an Agricultural Opportunity Area. There are no agricultural Williamson Act contract lands in unincorporated Los Angeles County except for Catalina Island. There is no forest land on the project site.

c) Conflict with existing zoning for, or cause rezoning of, forest land (as defined in Public Resources Code § 12220 (g)), timberland (as defined in Public Resources Code § 4526), or timberland zoned Timberland Production (as defined in Government Code § 51104(g))?	☐	☐	☐	☒

There is no forest land or timberland zoned Timberland Production within the vicinity of the project site.

d) Result in the loss of forest land or conversion of forest land to non-forest use?	☐	☐	☐	☒

There is no forest land within the vicinity of the project site.

e) Involve other changes in the existing environment which, due to their location or nature, could result in conversion of Farmland, to non-agricultural use or conversion of forest land to non-forest use?	☐	☐	☐	☒

There is no forest land or farmland within the vicinity of the project site, and the project will not result in the loss of either type of land.

3. AIR QUALITY

Would the project:	*Potentially Significant Impact*	*Less Than Significant Impact with Mitigation Incorporated*	*Less Than Significant Impact*	*No Impact*
a) Conflict with or obstruct implementation of applicable air quality plans of either the South Coast AQMD (SCAQMD) or the Antelope Valley AQMD (AVAQMD)?	☐	☐	☒	☐

The proposed project entails subdividing one existing residential lot into 2 single-family residential parcels. The project entails the creation of additional residential parcels in an R-A (Residential-Agricultural) zone. The project site is located within the South Coast Air Quality Management District (SCAQMD). The proposed project is consistent with the underlying land use designation; therefore, the project will not conflict or obstruct the implementation of the applicable SCAQMD air quality plan.

b) Violate any air quality standard or contribute substantially to an existing or projected air quality violation?	☐	☐	☒	☐

The proposed project entails subdividing an existing residential lot into two single-family lots. The project will not violate any applicable federal or state air quality standards or substantially contribute to an existing or projected air quality violation.

c) Result in a cumulatively considerable net increase of any criteria pollutant for which the project region is non-attainment under an applicable federal or state ambient air quality standard (including releasing emissions which exceed quantitative thresholds for ozone precursors)?	☐	☐	☒	☐

The project would not result in a cumulatively considerable net increase of non-attainment criteria pollutants. The subdivision of an existing residential lot into 2 single-family residential parcels, individually or cumulatively, will not exceed the SCAQMD Air Quality Significant Thresholds as one additional residential lot is in keeping with the density set forth in the underlying land use plan.

d) Expose sensitive receptors to substantial pollutant concentrations?	☐	☐	☒	☐

The project would not result in a cumulatively considerable net increase of non-attainment criteria pollutants. Although, residential neighborhoods are more susceptible to poor air quality, the proposed use is no more intense, in terms of land use, than what already exists. The subdivision of an existing residential lot into 2 single-family residential parcels, individually or cumulatively, will not exceed the SCAQMD Air Quality Significant Thresholds.

e) Create objectionable odors affecting a substantial number of people?	☐	☐	☒	☐

The proposed project of subdividing an existing single-family residential lot into two single-family residential parcels should not create objectionable odors affecting a substantial number of people. The proposed project is subject to AQMD Rule 402, which states: "A person shall not discharge from any source whatsoever such quantities of air contaminants or other material that cause injury, detriment, nuisance, or annoyance to any considerable number of persons or to the public, or that endanger the comfort, repose, health or safety of any of those persons or the public, or that cause, or have a natural tendency to cause, injury or damage to business or property." The provisions of this rule shall not apply to odors emanating from agricultural operations necessary for the growing of crops or the raising of fowl or animals.

4. BIOLOGICAL RESOURCES

Would the project:	*Potentially Significant Impact*	*Less Than Significant Impact with Mitigation Incorporated*	*Less Than Significant Impact*	*No Impact*
a) Have a substantial adverse effect, either directly or through habitat modifications, on any species identified as a candidate, sensitive, or special status species in local or regional plans, policies, or regulations, or by the California Department of Fish and Wildlife (CDFW) or U.S. Fish and Wildlife Service (USFWS)?	☐	☐	☒	☐

The project site is relatively flat with some short grasses and several mature trees, excluding Oak and Southern California Black Walnut species, along the perimeter of the property. The proposed residential subdivision is located in an urbanized and developed area, and is not located in or near an identified sensitive environmental area. Nesting birds occur all over the county and the project shall be compliant with the California Department of Fish & Wildlife (CDFW) codes related to Nesting Birds. The only species of concern in the area identified by the California Natural Diversity Database (CNDDB) are the Southwestern willow flycatcher (*Empidonax tralillii extimus*) and Parish's gooseberry (*Ribes divaricatum var. parishii*). These sightings occurred in 1906 and 1882, respectively. The Parish's gooseberry is listed as possibly extirpated and the Southwestern willow flycatcher is presumed extant.

b) Have a substantial adverse effect on any sensitive natural communities (e.g., riparian habitat, coastal sage scrub, oak woodlands, non-jurisdictional wetlands) identified in local or regional plans, policies, regulations or by CDFW or USFWS?	☐	☐	☐	☒

The project site is not located within a Significant Ecological Area (SEA), SEA Buffer Area, or Sensitive Environmental Resource Area (SERA). There are no oak trees or oak woodlands located on the project site.

c) Have a substantial adverse effect on federally or state protected wetlands (including, but not limited to, marshes, vernal pools, coastal wetlands, and drainages) or waters of the United States, as defined by § 404 of the federal Clean Water Act or California Fish & Game code § 1600, et seq. through direct removal, filling, hydrological interruption, or other means?	☐	☐	☐	☒

The project site does not contain either Federal or State-protected wetlands or waters.

d) Interfere substantially with the movement of any native resident or migratory fish or wildlife species or with established native resident or migratory wildlife corridors, or impede the use of native wildlife nursery sites?	☐	☐	☐	☒

The project site is not located within a Significant Ecological Area (SEA), SEA Buffer Area, or Sensitive Environmental Resource Area (SERA). There are no oak trees or oak woodlands located on the project site. The residential subdivision is located in an urbanized and developed area, and does not threaten migratory patterns, wildlife corridors, habitat linkages, or natural drainage courses.

e) Convert oak woodlands (as defined by the state, oak woodlands are oak stands with greater than 10% canopy cover with oaks at least 5 inch in diameter measured at 4.5 feet above mean natural grade) or otherwise contain oak or other unique native trees (junipers, Joshuas, southern California black walnut, etc.)?	☐	☐	☐	☒

There are no oak trees, oak woodlands, Joshua trees, Junipers, or Southern California Black Walnut trees on the subject property.

f) Conflict with any local policies or ordinances protecting biological resources, including Wildflower Reserve Areas (L.A. County Code, Title 12, Ch. 12.36), the Los Angeles County Oak Tree Ordinance (L.A. County Code, Title 22, Ch. 22.56, Part 16), the Significant Ecological Areas (SEAs) (L.A. County Code, Title 22, § 22.56.215), and Sensitive Environmental Resource Areas (SERAs) (L.A. County Code, Title 22, Ch. 22.44, Part 6)?	☐	☐	☐	☒

The project site is not located within a Significant Ecological Area (SEA), SEA Buffer Area, or Sensitive Environmental Resource Area (SERA). There are no Wildflower Reserve Areas on the subject property. Since there are no oak trees or oak woodlands located on the project site, there is no conflict with the Los Angeles County Oak Tree Ordinance.

g) Conflict with the provisions of an adopted state, regional, or local habitat conservation plan?	☐	☐	☐	☒

The project does not conflict with any adopted State, regional, or local Habitat Conservation Plan.

5. CULTURAL RESOURCES

Would the project:	*Potentially Significant Impact*	*Less Than Significant Impact with Mitigation Incorporated*	*Less Than Significant Impact*	*No Impact*
a) Cause a substantial adverse change in the significance of a historical resource as defined in CEQA Guidelines § 15064.5?	☐	☐	☒	☐

The project site does not contain historical resources as defined in CEQA Guidelines §15064.5 and there is no record of national or state-designated historical resources on the project site.

b) Cause a substantial adverse change in the significance of an archaeological resource pursuant to CEQA Guidelines § 15064.5?	☐	☐	☒	☒

The project site does not contain known archaeological resources as defined in CEQA Guidelines §15064.5 and would not result in any ground disturbance.

c) Directly or indirectly destroy a unique paleontological resource or site or unique geologic feature, or contain rock formations indicating potential paleontological resources?	☐	☐	☒	☐

There are no known paleontological resources on or near the site. There are no unique geological features or rock formations on or near the project site. If the project is approved, the following text will be a condition of the approval:

In the event that paleontological resources are encountered during the demolition/construction process, the proposed project would be required to halt all development activities, contact the Los Angeles County Natural History Museum and inform them of the encounter. Subsequently, the applicant should retain the services of a qualified paleontologist. Only the paleontologist will be able to tell the contractor when development activities can recommence.

d) Disturb any human remains, including those interred outside of formal cemeteries?	☐	☐	☒	☐

There is no record of human remains on the project site. If the project is approved, the project will be conditioned to require the subdivider to halt construction in the vicinity of the discovered human remains, leaving the remains in place. From that point, the procedures described in Section 7050.5 of the California Health and Safety Code shall be followed. These procedures require notification of the County Coroner. If the County Coroner determines that the discovered remains are those of Native American ancestry, then the Native American Heritage Commission (NAHC) must be notified by telephone within 24 hours. Sections 5097.98 of the Public Resources Code describes the procedures to be followed after the

notification of the NAHC.

6. ENERGY

Would the project:	*Potentially Significant Impact*	*Less Than Significant Impact with Mitigation Incorporated*	*Less Than Significant Impact*	*No Impact*
a) Conflict with Los Angeles County Green Building Standards Code (L.A. County Code Title 31)?	☐	☐	☐	☒

The project is subject to and shall comply with the Los Angeles County Green Building Standards Code.

b) Involve the inefficient use of energy resources (see Appendix F of the CEQA Guidelines)?	☐	☐	☒	☐

The project is required to comply with the LA County Green Building Standards Code related to construction. Appendix F, Section 1 of the CEQA Guidelines requires evaluation of energy efficiency only for Environmental Impact Reports. The environmental determination for this project is a negative declaration.

7. GEOLOGY AND SOILS

Would the project:	*Potentially Significant Impact*	*Less Than Significant Impact with Mitigation Incorporated*	*Less Than Significant Impact*	*No Impact*
a) Expose people or structures to potential substantial adverse effects, including the risk of loss, injury, or death involving:				
i) Rupture of a known earthquake fault, as delineated on the most recent Alquist-Priolo Earthquake Fault Zoning Map issued by the State Geologist for the area or based on other substantial evidence of a known active fault trace? Refer to Division of Mines and Geology Special Publication 42.	☐	☐	☒	☐

The project site is not located within an Alquist-Priolo Earthquake Fault Zone. Therefore, people or structures on the project site will not be exposed to potentially substantial adverse effects (Source: California Geological Survey, Alquist-Priolo Earthquake Fault Zones Map).

ii) Strong seismic ground shaking?	☐	☐	☒	☐

The project site is located approximately 2/3 of a mile southwest of the Raymond Fault. There is no fault trace within the project site. Therefore, people or structures on the project site will not be exposed to potential substantial adverse effects (Source: California Geological Survey, Alquist-Priolo Earthquake Fault Zones Map).

iii) Seismic-related ground failure, including liquefaction and lateral spreading?	☐	☐	☐	☒

The project site is not located within a designated soil liquefaction area (Source: GIS-Net Liquefaction Zone Layer).

iv) Landslides?	☐	☐	☐	☒

The project site is not located within any identified landslide zone. (Source: California Geological Survey).

b) Result in substantial soil erosion or the loss of topsoil?	☐	☐	☒	☐

The project site is located within an urbanized area. The proposed project entails a subdivision of one

existing residential parcel into 2 single-family residential parcels. No grading is proposed as part of the subdivision and a connection to the Municipal Separate Storm Sewer System (MS4) is not required for the small-scale development. Future construction of residential units will be subject to grading and/or site drainage review and have to comply with the County's Low Impact Development (LID) Ordinance. LID sets forth requirements to manage storm water runoff and lessen the potential for erosion resulting from storm water runoff. Thus, the proposed project should not cause substantial soil erosion or the loss of topsoil.

c) Be located on a geologic unit or soil that is unstable, or that would become unstable as a result of the project, and potentially result in on- or off-site landslide, lateral spreading, subsidence, liquefaction or collapse?	☐	☐	☒	☐

The project site is not located within a designated soil liquefaction area (Source: California Department of Conservation). The proposed project will be subject to construction standards imposed by the Department of Public Works and should therefore not cause soil to become unstable or result in on- or off-site landslide, lateral spreading, subsidence, liquefaction, or collapse.

d) Be located on expansive soil, as defined in Table 18-1-B of the Uniform Building Code (1994), creating substantial risks to life or property?	☐	☐	☒	☐

The project site is not located on soil identified as expansive. The proposed project would be required to comply with Los Angeles County building codes, which includes construction and engineering standards, as well as any recommendations developed in tandem with a soils or geology report.

e) Have soils incapable of adequately supporting the use of onsite wastewater treatment systems where sewers are not available for the disposal of wastewater?	☐	☐	☐	☒

The proposed project does not entail the installation of onsite wastewater treatment systems, since public sewers are available for the disposal of wastewater.

f) Conflict with the Hillside Management Area Ordinance (L.A. County Code, Title 22, § 22.56.215) or hillside design standards in the County General Plan Conservation and Open Space Element?	☐	☐	☐	☒

The project site does not contain slopes over 25 percent, and thus does not conflict with the Hillside Management Area Ordinance.

8. GREENHOUSE GAS EMISSIONS

Would the project:	*Potentially Significant Impact*	*Less Than Significant Impact with Mitigation Incorporated*	*Less Than Significant Impact*	*No Impact*
a) Generate greenhouse gas (GHGs) emissions, either directly or indirectly, that may have a significant impact on the environment?	☐	☐	☒	☐

The project entails a subdivision of an existing residential lot into 2 single-family residential parcels on 0.37 net acres. Considering the project is required to comply with the County's Green Building Ordinance related to construction and is relatively small in scale, GHG emissions resulting from water delivery, electricity generation, and construction activities will not have a significant impact on the environment.

b) Conflict with any applicable plan, policy, or regulation adopted for the purpose of reducing the emissions of greenhouse gases?	☐	☐	☒	☐

The project entails a subdivision of one existing residential lot into 2 single-family residential parcels on 0.37 net acres. Considering the relatively small scale of the project and required compliance with the County's Green Building Ordinance, it is not expected that the project will generate GhGs that will have a significant impact on the environment. Therefore, the project will not conflict with any applicable plan, policy, or regulation adopted for the purpose of reducing GhGs emissions.

9. HAZARDS AND HAZARDOUS MATERIALS

Would the project:	*Potentially Significant Impact*	*Less Than Significant Impact with Mitigation Incorporated*	*Less Than Significant Impact*	*No Impact*
a) Create a significant hazard to the public or the environment through the routine transport, storage, production, use, or disposal of hazardous materials?	☐	☐	☒	☐

The residential subdivision project does not include the routine transportation, storage, production, use, or disposal of hazardous materials, or the use of pressurized tanks. The proposed project includes the demolition of existing structures which will involve the handling and transport of resulting materials and debris that could include asbestos and lead-based paint. If hazardous materials are discovered, the construction crew is required to comply with local, state, and Federal laws regulating the handling, transport, storage, and disposal of such materials. During the construction phase of the project, there may be minimal use of hazardous materials, such as solvents, paints, lubricants, and oils. Current local, state, and Federal laws relating to the use, storage, and disposal of these materials make it unlikely that the project would have a significant effect on the environment.

b) Create a significant hazard to the public or the environment through reasonably foreseeable upset and accident conditions involving the release of hazardous materials or waste into the environment?	☐	☐	☒	☐

The proposed project could use hazardous materials such as paints, cleaning agents, aerosol cans, landscaping-related chemicals, and common household substances such as bleaches during construction activities on the proposed project site. All uses and storage of these materials would be subject to federal, state, and local laws pertaining to the use, storage and transportation of these hazardous materials. Most of the hazardous materials indicated above are allowed to be disposed of at the local Class II and Class III landfills that serve the proposed project site. Since the proposed project would be required to abide by federal, state, and local laws pertaining to the use, storage, and transportation of these materials, the likelihood of an accidental release occurring and creating a significant hazard to the public would be minimal. Therefore, impacts would be less than significant.

The residential subdivision project does not include the routine transportation, storage, production, use, or disposal of hazardous materials, or the use of pressurized tanks. During the construction phase of the project, there may be minimal use of hazardous materials, such as solvents, paints, lubricants, and oils. Current local, state, and Federal laws relating to the use, storage, and disposal of these materials make it unlikely that the project would have a significant effect on the environment.

c) Emit hazardous emissions or handle hazardous or acutely hazardous materials, substances, or waste within one-quarter mile of sensitive land uses?	☐	☐	☒	☐

The subdivision of one existing residential lot into 2 single-family residential parcels will not generate

hazardous emissions or result in the handling of acutely hazardous materials, substances or waste. The demolition phase of the project could involve the handling, transport, and disposal of hazardous materials and the construction phase could include the minimal use of hazardous materials, such as solvents, paints, lubricants, and oils. However, current local, state, and Federal laws relating to the use, storage, and disposal of these materials make it unlikely that the project would have a significant effect on the residences located within 500 feet of the project site.

The subdivision is proposed in an established urban residential neighborhood. Residential neighborhoods are considered a sensitive land use and more susceptible to poor air quality. Land uses compatible with residential, that are also considered sensitive, are located within a quarter mile of the project site. These include schools, playgrounds, and a daycare center.

d) Be located on a site which is included on a list of hazardous materials sites compiled pursuant to Government Code § 65962.5 and, as a result, would it create a significant hazard to the public or the environment?	☐	☐	☐	☒

The project site is not included on the California Department of Toxic Substances Control EnviroStor database of clean-up sites and hazardous waste permitted facilities (http://www.envirostor.dtsc.ca.gov/public/).

e) For a project located within an airport land use plan, or where such a plan has not been adopted, within two miles of a public airport or public use airport, would the project result in a safety hazard for people residing or working in the project area?	☐	☐	☐	☒

The project site is not located within an airport land use plan or within two miles of a public airport or public use airport.

f) For a project within the vicinity of a private airstrip, would the project result in a safety hazard for people residing or working in the project area?	☐	☐	☐	☒

The project site is not located within the vicinity of a private airstrip.

g) Impair implementation of, or physically interfere with, an adopted emergency response plan or emergency evacuation plan?	☐	☐	☒	☐

The project will not impair implementation of, or physically interfere, with an adopted emergency response plan or emergency evacuation plan.

h) Expose people or structures to a significant risk of loss, injury or death involving fires, because the

project is located:

i) within a Very High Fire Hazard Severity Zones (Zone 4)?	☐	☐	☐	☒

The project site is not located within a Very High Fire Hazard Severity Zone.

ii) within a high fire hazard area with inadequate access?	☐	☐	☐	☒

The project site is not within a high fire hazard area with inadequate access. The project site is located in an urbanized area with easy access to existing major highways.

iii) within an area with inadequate water and pressure to meet fire flow standards?	☐	☐	☒	☐

The water purveyor confirmed, in a letter dated 11/15/13, the existing water system can support the required fire flow as set forth by the Fire Department.

iv) within proximity to land uses that have the potential for dangerous fire hazard?	☐	☐	☒	☐

The project site is not located in proximity to land uses with a potential for dangerous fire hazard. The project site is surrounded by other residential uses and commercial buildings. The proposed project would be required to comply with all of the requirements of the Los Angeles County Fire Code.

i) Does the proposed use constitute a potentially dangerous fire hazard?	☐	☐	☒	☐

The proposed use does not constitute a potentially dangerous fire hazard. The project site is not located within a Very High Fire Hazard Severity Zone. The proposed residential subdivision resulting in two lots does not entail the regular use of large amounts of hazardous or highly flammable materials or substances.

10. HYDROLOGY AND WATER QUALITY

Would the project:	*Potentially Significant Impact*	*Less Than Significant Impact with Mitigation Incorporated*	*Less Than Significant Impact*	*No Impact*
a) Violate any water quality standards or waste discharge requirements?	☐	☐	☒	☐

The project site is connected to an existing municipal wastewater system. A sewer area study was approved by the Department of Public Works for the proposed two single-family residential parcels. In unincorporated Los Angeles County, the proposed project would be required to comply with the requirements of the Low-Impact Development Ordinance, in order to control and minimize potentially polluted runoff. Compliance with these standards should prevent the violation of any water quality or waste discharge requirements.

b) Substantially deplete groundwater supplies or interfere substantially with groundwater recharge such that there would be a net deficit in aquifer volume or a lowering of the local groundwater table level (e.g., the production rate of pre-existing nearby wells would drop to a level which would not support existing land uses or planned uses for which permits have been granted)?	☐	☐	☒	☐

The project site will be served by a public water system and will not make use of local groundwater.

c) Substantially alter the existing drainage pattern of the site or area, including through the alteration of the course of a stream or river, in a manner which would result in substantial erosion or siltation on- or off-site?	☐	☐	☒	☐

The project entails dividing the one existing residential lot into 2 single-family residential parcels. The site is relatively level and does not contain any existing drainage courses. The creation of two single-family lots will not substantially alter the existing drainage pattern of the site as grading is not proposed as part of the subdivision request. Any future development of the residential lots will be required to submit an approved drainage plan and comply with LID requirements.

d) Substantially alter the existing drainage pattern of the site or area, including through the alteration of the course of a stream or river, or substantially increase the rate or amount of surface runoff in a manner which would result in flooding on- or off-site?	☐	☐	☒	☐

The project entails dividing an existing residential lot into 2 single-family residential parcels. The site is

relatively level and does not contain any existing drainage courses. The land division will not substantially alter the existing drainage pattern of the site as no grading is proposed as part of the subdivision request. Any future development of the residential lots will be required to submit an approved drainage plan and comply with LID requirements.

e) Add water features or create conditions in which standing water can accumulate that could increase habitat for mosquitoes and other vectors that transmit diseases such as the West Nile virus and result in increased pesticide use?	☐	☐	☒	☐

The creation of two single family lots from one lot, with no immediate plans to construct single-family homes, would not increase habitat for mosquitoes and other vectors resulting in increased pesticide use. Any proposed water features in conjunction with single-family residences are reviewed as part of the routine permitting process. The review includes ensuring proposed water features have a water circulation component.

f) Create or contribute runoff water which would exceed the capacity of existing or planned stormwater drainage systems or provide substantial additional sources of polluted runoff?	☐	☐	☒	☐

The subdivision of the project site into 2 residential lots would not create additional impervious surfaces that would exceed the capacity of existing or planned stormwater drainage systems. Future construction of residences will be subject to site drainage review and the LID Ordinance. The County's storm drainage conveyance system (MS4) collects residential stormwater discharge that is not absorbed onsite and is required to comply with its National Pollutant Discharge Elimination System (NPDES) permit.

g) Generate construction or post-construction runoff that would violate applicable stormwater NPDES permits or otherwise significantly affect surface water or groundwater quality?	☐	☐	☒	☐

The project will be required to comply with the National Pollution Discharge Elimination System ("NPDES") requirements and any future construction of residences will be subject to the County's Low Impact Development to minimize or reduce runoff. These collective measures should prevent violation of applicable stormwater permits and negative impacts to surface waters or groundwater quality.

h) Conflict with the Los Angeles County Low Impact Development Ordinance (L.A. County Code, Title 12, Ch. 12.84 and Title 22, Ch. 22.52)?	☐	☐	☐	☒

The project will be required to comply with the Los Angeles County Low-Impact Development Ordinance.

i) Result in point or nonpoint source pollutant	☐	☐	☒	☐

discharges into State Water Resources Control Board-designated Areas of Special Biological Significance?

The project site is located in the San Gabriel Valley, approximately 20 miles from the coastal portions of Los Angeles County and utilizes the municipal storm drain system. Since the proposed project is subject to the County's Low-Impact Development Ordinance, adherence to the requirements should prevent any substantial amount of nonpoint sources of pollutants.

The project site is not located in the vicinity of a State Water Resources Control Board ("SWRCB")-designated Area of Special Biological Significance identified on the SCRCB website (Source: http://www.waterboards.ca.gov/water_issues/programs/ocean/docs/asbs/asbs_areas/asbs_swqpa_publication03.pdf.

j) Use onsite wastewater treatment systems in areas with known geological limitations (e.g. high groundwater) or in close proximity to surface water (including, but not limited to, streams, lakes, and drainage course)? ☐ ☐ ☐ ☒

The proposed project does not entail the use of onsite wastewater treatment systems.

k) Otherwise substantially degrade water quality? ☐ ☐ ☒ ☐

The proposed project of subdividing one existing residential lot into 2 single-family residential parcels will not otherwise substantially degrade water quality. The proposed project will be connected to the existing public water and sewer systems.

l) Place housing within a 100-year flood hazard area as mapped on a federal Flood Hazard Boundary or Flood Insurance Rate Map or other flood hazard delineation map, or within a floodway or floodplain? ☐ ☐ ☐ ☒

The project site is not located within a 100-year flood hazard area as mapped by a Federal Emergency Management Agency ("FEMA") Flood Insurance Rate Map ("FIRM").

m) Place structures, which would impede or redirect flood flows, within a 100-year flood hazard area, floodway, or floodplain? ☐ ☐ ☐ ☒

The project site is not located within a 100-year flood hazard area as mapped by a Federal Emergency Management Agency ("FEMA") Flood Insurance Rate Map ("FIRM").

n) Expose people or structures to a significant risk of loss, injury or death involving flooding, including flooding as a result of the failure of a levee or dam? ☐ ☐ ☐ ☒

The project site is not located within a 100-year flood hazard area as mapped by a Federal Emergency Management Agency ("FEMA") Flood Insurance Rate Map ("FIRM"). The project site is not located within a dam inundation area, as identified by the Los Angeles County CEO/ITS Emergency Management Systems.

o) Place structures in areas subject to inundation by seiche, tsunami, or mudflow?	☐	☐	☐	☒

The project site is not located within a flood zone, dam inundation area, landslide zone, or tsunami inundation zone.

11. LAND USE AND PLANNING

Would the project:	*Potentially Significant Impact*	*Less Than Significant Impact with Mitigation Incorporated*	*Less Than Significant Impact*	*No Impact*
a) Physically divide an established community?	☐	☐	☒	☐

The proposed project entails subdividing an existing residential lot into two parcels and would not result in a physical division of an established community. The project does not require the construction of new freeways, rail lines, flood control channels, and the project will conform to the existing street grid.

b) Be inconsistent with the applicable County plans for the subject property including, but not limited to, the General Plan, specific plans, local coastal plans, area plans, and community/neighborhood plans?	☐	☐	☒	☐

The proposed project entails subdividing an existing residential lot into two parcels. The property's land use category is Low Density Residential (1-6 dwelling units/acre) within the Countywide Land Use Plan. The land use designation is designed for the establishment of single-family residential developments. The proposed project of 2 residential parcels on 0.37 acres is consistent with this category of the countywide General Plan.

c) Be inconsistent with the County zoning ordinance as applicable to the subject property?	☐	☐	☒	☐

The property is zoned R-A (Residential - Agricultural) and is located within the East Pasadena-San Gabriel Community Standards District (CSD). The proposed development of 2 single-family residences is consistent with the R-A zoning classification. The applicant is requesting reduced street frontage and required lot width of 54' while the CSD requires 60' for both standards (based on the size of the proposed lots). The standard minimum lot width is 50'; however, when another ordinance in Title 22 imposes a different standard, the more stringent standard applies. Currently 42% of properties within a 500' radius of the project site do not meet the 60' street frontage and required minimum lot width requirements as imposed by the East Pasadena-San Gabriel CSD.

d) Conflict with Hillside Management criteria, Significant Ecological Areas conformance criteria, or other applicable land use criteria?	☐	☐	☐	☒

The project site does not contain any area exceeding 25 percent in slope and is not subject to the requirements of the Hillside Management Ordinance.

12. MINERAL RESOURCES

Would the project:	*Potentially Significant Impact*	*Less Than Significant Impact with Mitigation Incorporated*	*Less Than Significant Impact*	*No Impact*
a) Result in the loss of availability of a known mineral resource that would be of value to the region and the residents of the state?	☐	☐	☐	☒

The project will not result in the loss of availability of a known mineral resource, as the project site is not identified as a mineral resource area on the Los Angeles County Natural Resource Areas map.

b) Result in the loss of availability of a locally-important mineral resource recovery site delineated on a local general plan, specific plan or other land use plan?	☐	☐	☐	☒

The project would not result in the loss of availability of a locally-important mineral resource recovery site, as the project site is not identified as a mineral resource area on the Los Angeles County Natural Resource Areas map.

13. NOISE

Would the project result in:	*Potentially Significant Impact*	*Less Than Significant Impact with Mitigation Incorporated*	*Less Than Significant Impact*	*No Impact*
a) Exposure of persons to, or generation of, noise levels in excess of standards established in the County General Plan or noise ordinance (Los Angeles County Code, Title 12, Chapter 12.08), or applicable standards of other agencies?	☐	☐	☒	☐

The project would not result in exposure of persons to, or generation of, noise levels in excess of standards established in the County Noise Ordinance or the General Plan Noise Element (GPNE). The project site is not near a noise-generating site (e.g., airport, industrial site), but is approximately a tenth of a mile or 528 feet from arterial State Highway Route 19 (Rosemead Boulevard). According to the GPNE, an arterial highway at roughly 50' from the project site produces noise measuring 65 decibels (dB) to 95 dB, depending on the vehicle type. The GPNE likens noise heard at 65 dB to the sound produced by an electrical typewriter set 10' away and the noise heard at 95dB to the sound produced by a newspaper press.

The project will conform to Title 12 Chapter 12.08 ("Noise Control Ordinance") of the Los Angeles County Code, which sets forth 45 decibels (db) as the exterior noise level for nighttime (between 10 p.m. and 7 a.m.) and 50dB for daytime (7 a.m. to 10 p.m.) in residential areas (Noise Zone II). The project site will not create noise in excess of these limits, nor will residents of the project be exposed to noise in excess of these limits. The Noise Control Ordinance regulates construction noise and the hours of operation of mobile construction equipment. The Los Angeles County General Plan Noise Element does not provide thresholds for noise.

b) Exposure of persons to or generation of excessive groundborne vibration or groundborne noise levels?	☐	☐	☒	☐

Although the project is located within an established residential neighborhood, it would not expose sensitive receptors to excessive noise levels. The project proposes the same use as what currently exists. Further, the project will comply with Title 12 Chapter 12.08 ("Noise Control Ordinance") of the Los Angeles County Code which sets ambient noise levels for various noise zones and limits construction noise to 75dB during the daytime in single-family residential areas.

c) A substantial permanent increase in ambient noise levels in the project vicinity above levels existing without the project, including noise from parking areas?	☐	☐	☒	☐

The project entails a subdivision of an existing residential lot into 2 parcels. The project should not generate significant vehicle noise from traffic and parking. The project would not result in a substantial permanent increase in ambient noise in the project vicinity above current levels, including noise from parking areas. Any noise generated by additional single-family residences would be similar to ambient noise levels in the area, which is developed with single-family residences at a similar density.

d) A substantial temporary or periodic increase in ambient noise levels in the project vicinity above levels existing without the project, including noise from amplified sound systems?	☐	☐	☒	☐

The project entails the subdivision of an existing residential lot into 2 parcels. Although the subdivision project includes demolition, the construction activity as well as all future activity will be required to comply with the limits set forth in the Los Angeles County Noise Control Ordinance. Associated vehicle noise from traffic and parking should not generate significant temporary or periodic increase in ambient noise levels. The project would not result in a substantial permanent increase in ambient noise in the project vicinity above current levels, including noise from parking areas. Any noise generated by additional single-family residences would be in keeping with the current ambient noise levels in the area, which is developed with single-family residences at a similar density. The subdivision should not create a substantial temporary or periodic new noise source, or result in any significant impacts related to a substantial increase in temporary noise.

e) For a project located within an airport land use plan or, where such a plan has not been adopted, within two miles of a public airport or public use airport, would the project expose people residing or working in the project area to excessive noise levels?	☐	☐	☐	☒

The project site is not located within an airport land use plan or within two miles of a public airport or public use airport.

f) For a project within the vicinity of a private airstrip, would the project expose people residing or working in the project area to excessive noise levels?	☐	☐	☐	☒

The project site is not within the vicinity of a private airstrip. The El Monte Airport is approximately 2.5 miles to the southeast of the project site.

14. POPULATION AND HOUSING

Would the project:	*Potentially Significant Impact*	*Less Than Significant Impact with Mitigation Incorporated*	*Less Than Significant Impact*	*No Impact*
a) Induce substantial population growth in an area, either directly (for example, by proposing new homes and businesses) or indirectly (for example, through extension of roads or other infrastructure)?	☐	☐	☒	☐

The project proposes one additional single family lot which would not induce substantial growth in the area. The project site is located in a well established urban residential development.

b) Displace substantial numbers of existing housing, especially affordable housing, necessitating the construction of replacement housing elsewhere?	☐	☐	☒	☐

The creation of 2 single-family residential parcels includes demolition of the existing housing unit; but the resulting subdivision will produce a gain of one additional housing unit. There are no affordable housing units onsite; therefore, replacement housing elsewhere is not necessary.

c) Displace substantial numbers of people, necessitating the construction of replacement housing elsewhere?	☐	☐	☒	☐

The creation of 2 single-family parcels will not displace substantial numbers of people necessitating the construction of replacement housing elsewhere. Residents of adjacent properties will be able to access their respective properties during and after construction of the proposed project.

d) Cumulatively exceed official regional or local population projections?	☐	☐	☒	☐

The project would not exceed official regional or local population projections. The proposed 2 single-family parcels will not exceed this projection and is consistent with the density permitted by the Countywide General Plan. The creation of 1 additional single-family parcel should not alter the growth rate of the population beyond that projected in the County General Plan.

15. PUBLIC SERVICES

	Potentially Significant Impact	*Less Than Significant Impact with Mitigation Incorporated*	*Less Than Significant Impact*	*No Impact*
a) Would the project create capacity or service level problems, or result in substantial adverse physical impacts associated with the provision of new or physically altered governmental facilities in order to maintain acceptable service ratios, response times or other performance objectives for any of the public services:				
Fire protection?	☐	☐	☒	☐

The Fire Department has not indicated any significant effects on fire response time, service level, or facilities. The nearest Los Angeles County Fire Station (#5) is approximately 1.1 miles, shortest drive route, to the northeast of the project site. No additional fire facilities are required for this project.

Sheriff protection?	☐	☐	☒	☐

The project would not create capacity or service level problems or result in substantial adverse physical impacts. The project site is approximately 1.3 miles, shortest drive route, from the Temple Sheriff's Station. The proposed project will add new permanent residents to the project site but not enough to substantially reduce service ratios.

Schools?	☐	☐	☒	☐

The project site is located within the Temple City Unified School District. Considering the scale of the project, the two single-family parcels are not expected to create a capacity problem for the School District. The project will be required to pay school impact fees to address the increase in population, at a rate to be determined by the school district.

Parks?	☐	☐	☒	☐

The project will be conditioned to pay Quimby Fees per Los Angeles County Code Section 21.28.140. No trails are required. The nearest existing park is Tripolis Park in the City of Arcadia located approximately 0.8 miles, shortest route, to the northeast.

Libraries?	☐	☐	☒	☐

The project will be conditioned to pay the library fees per Los Angeles County Code Section 22.72. The proposed project will generate 2 residential units, and thus increase the population. The population increase is not substantial and will not diminish Los Angeles County Public Library's capacity to serve the project

site and the surrounding community. The Temple City Library is located approximately 2.1 miles, shortest drive route, southeast of the project site.

Other public facilities? ☐ ☐ ☒ ☐

The project is not perceived to create capacity or service level problems or result in substantial adverse physical impacts for any other public facility.

16. RECREATION

	Potentially Significant Impact	*Less Than Significant Impact with Mitigation Incorporated*	*Less Than Significant Impact*	*No Impact*
a) Would the project increase the use of existing neighborhood and regional parks or other recreational facilities such that substantial physical deterioration of the facility would occur or be accelerated?	☐	☐	☒	☐

Review of the project by the Los Angeles County Department of Parks and Recreation ("Parks and Recreation") has not disclosed that the project would increase the use of existing neighborhood and regional parks or other recreational facilities contributing to substantial or accelerated physical deterioration of such facilities.

b) Does the project include neighborhood and regional parks or other recreational facilities or require the construction or expansion of such facilities which might have an adverse physical effect on the environment?	☐	☐	☒	☐

The project does not include recreational facilities. Since the project does not entail a dedication of park space, the subdivider will be required to pay in-lieu Quimby fees to satisfy the park obligation. No construction or expansion of recreational facilities is required.

c) Would the project interfere with regional open space connectivity?	☐	☐	☐	☒

There are no regional trails located in the vicinity or on the project site. There are no expected impacts to regional open space connectivity. The project is proposed in an established urban neighborhood.

17. TRANSPORTATION/TRAFFIC

Would the project:	*Potentially Significant Impact*	*Less Than Significant Impact with Mitigation Incorporated*	*Less Than Significant Impact*	*No Impact*
a) Conflict with an applicable plan, ordinance, or policy establishing measures of effectiveness for the performance of the circulation system, taking into account all modes of transportation including mass transit and non-motorized travel and relevant components of the circulation system, including but not limited to intersections, streets, highways and freeways, pedestrian and bicycle paths, and mass transit?	☐	☐	☒	☐

The project would not conflict with an applicable plan, ordinance, or policy establishing a measure of effectiveness for the performance of the circulation system. The growth proposed by the project is accounted for in the Baseline Growth Forecast of the 2008 Southern California Association of Governments' Regional Transportation Plan ("RTP"), which provided the basis for developing the land use assumptions at the regional and small-area levels that established the 2008 Regional Transportation Plan Alternative.

b) Conflict with an applicable congestion management program (CMP), including, but not limited to, level of service standards and travel demand measures, or other standards established by the CMP for designated roads or highways?	☐	☐	☒	☐

The project entails a subdivision of one existing residential lot into 2 single-family residential parcels. The traffic impacts of the project have been reviewed and cleared by the Los Angeles County Department of Public Works ("DPW").

c) Result in a change in air traffic patterns, including either an increase in traffic levels or a change in location that results in substantial safety risks?	☐	☐	☐	☒

The project site is not located near a public or private airstrip and will not encroach into air traffic patterns.

d) Substantially increase hazards due to a design feature (e.g., sharp curves or dangerous intersections) or incompatible uses (e.g., farm equipment)?	☐	☐	☐	☒

The project entails the subdivision of one existing residential lot into 2 single-family residential parcels. The project does not entail creating sharp curves or dangerous intersections or incompatible uses. Therefore,

there will be no increased hazards due to design features.

e) Result in inadequate emergency access? ☐ ☐ ☒ ☐

The proposed project of creating one additional residential parcel would not block or provide inadequate emergency access for the project itself or make existing emergency access to off-site properties inadequate. Emergency access has been reviewed and cleared by the Los Angeles County Fire Department.

f) Conflict with adopted policies, plans, or programs regarding public transit, bicycle, or pedestrian facilities, or otherwise decrease the performance or safety of such facilities? ☐ ☐ ☒ ☐

The project site is located along a proposed Class III bike route identified on the 2012 Bikeways Master Plan. Occupation of the two single family homes along the proposed bike route would not impede the use of these facilities or reasonably decrease the performance or safety of such facilities. Construction of road improvements may temporarily impede the use of the bike route in front of subject property. There are no transit overlay districts. The subdivider is required to construct a sidewalk in front of the proposed project. Currently, sidewalks only exist on the corners at the west end of Ardendale Avenue. Therefore, the proposed project would make a small improvement in the existing pedestrian pathway system. The closest bus stop is located at the northwest corner of Ardendale Avenue/Rosemead Boulevard. Access to and use of this facility would not be impacted by the proposed project. Overall, there will be minimal negative impact resulting from the proposed project.

18. UTILITIES AND SERVICE SYSTEMS

Would the project:	*Potentially Significant Impact*	*Less Than Significant Impact with Mitigation Incorporated*	*Less Than Significant Impact*	*No Impact*
a) Exceed wastewater treatment requirements of either the Los Angeles or Lahontan Regional Water Quality Control Boards?	☐	☐	☒	☐

The creation of 1 additional residential parcel is not expected to exceed treatment requirements of the Los Angeles Regional Water Quality Control Boards. All public wastewater disposal (sewer) systems are required to obtain and operate under the terms of an NPDES (National Pollution Discharge Elimination System) permit, which is issued by the local Regional Water Quality Control Board (RWQCB). All municipal wastewater treatment facilities are required to obtain NPDES permits from the RWQCB and any project which would connect to such a system would be required to comply with the same standards imposed by the NPDES permit. Thus, project conformity with NPDES permit standards is achieved by the time residential units connect to the publicly owned treatment works.

b) Create water or wastewater system capacity problems, or result in the construction of new water or wastewater treatment facilities or expansion of existing facilities, the construction of which could cause significant environmental effects?	☐	☐	☒	☐

The creation of 1 additional residential parcel should not create a water or wastewater system capacity problem nor result in the construction of new water or wastewater treatment facilities. The project site will be served by a public water system, which has issued a "will serve" letter for the proposed subdivision.

c) Create drainage system capacity problems, or result in the construction of new storm water drainage facilities or expansion of existing facilities, the construction of which could cause significant environmental effects?	☐	☐	☒	☐

The Department of Public Works' review of the project indicates that the project would not create drainage system capacity problems, and no construction of new storm water drainage facilities or expansion of existing facilities is required. The County's Low Impact Development (LID) Ordinance was created to deal with stormwater runoff from new projects. Future construction of residential units will be required to comply with the LID Ordinance.

d) Have sufficient reliable water supplies available to serve the project demands from existing entitlements and resources, considering existing and projected water demands from other land uses?	☐	☐	☒	☐

The project will have sufficient reliable water supplies available to serve the project demands from existing entitlements and resources. The project site will be served by a public water system, which has issued a "will serve" letter for the proposed subdivision.

e) Create energy utility (electricity, natural gas, propane) system capacity problems, or result in the construction of new energy facilities or expansion of existing facilities, the construction of which could cause significant environmental effects?	☐	☐	☒	☐

The creation of 1 additional single-family residences will not significantly impact the availability of adequate energy supplies and should not create energy utility capacity problems or result in the construction of new energy facilities or expansion of existing facilities. In addition, any future construction will be subject to the Green Building Ordinance, which is required to provide energy saving measures to further reduce the amount of energy consumed by the proposed project.

f) Be served by a landfill with sufficient permitted capacity to accommodate the project's solid waste disposal needs?	☐	☐	☒	☐

Development at the proposed density at this location is planned for under the existing Los Angeles County Regional Waste Management Plan. The subdivision proposal, to create 2 residential parcels, should not significantly impact solid waste disposal capacity due to its small scale.

g) Comply with federal, state, and local statutes and regulations related to solid waste?	☐	☐	☒	☐

The project would be required to comply with federal, state, and local statutes and regulations related to solid waste. The California Integrated Waste Management Act of 1989 requires the County of Los Angeles to attain specific waste diversion goals. Additionally, when households retain waste hauler services contracted with the County, residences receive one container for recyclable materials and one for green waste in addition to the trash container. Households can also receive one additional green waste container and one recyclable container at no extra cost upon request in an effort to achieve the waste diversion goals through increased recycling access (California Solid Waste Reuse and Recycling Access Act of 1991). The project will include sustainable elements to ensure compliance with all federal, state, and local statutes and regulations related to solid waste. It is anticipated that these project elements will comply with federal, state, and local statutes and regulations to reduce the amount of solid waste. The project will not displace an existing or proposed waste disposal, recycling, or diversion site.

19. MANDATORY FINDINGS OF SIGNIFICANCE

	Potentially Significant Impact	*Less Than Significant Impact with Mitigation Incorporated*	*Less Than Significant Impact*	*No Impact*
a) Does the project have the potential to degrade the quality of the environment, substantially reduce the habitat of a fish or wildlife species, cause a fish or wildlife population to drop below self-sustaining levels, threaten to eliminate a plant or animal community, substantially reduce the number or restrict the range of a rare or endangered plant or animal or eliminate important examples of the major periods of California history or prehistory?	☐	☐	☒	☐

The project does not have the potential to degrade the quality of the environment, substantially reduce the habitat of a fish or wildlife species, cause a fish or wildlife population to drop below self-sustaining levels, threaten to eliminate a plant or animal community, substantially reduce the number or restrict the range of a rare or endangered plant or animal or eliminate important examples of the major periods of California history or prehistory. As analyzed in the Initial Study sections above, the proposed project will have no impact or less than significant impact in all these areas.

b) Does the project have the potential to achieve short-term environmental goals to the disadvantage of long-term environmental goals?	☐	☐	☒	☐

The proposed project does not achieve short-term goals to the disadvantage of long-term goals. Although less than required street frontage and averaged lot width, per the CSD, are being requested, the proposed use and density complies with the County General Plan and all other requirements set forth by the Zoning Ordinance. Therefore, the proposed project would have a less than significant impact.

c) Does the project have impacts that are individually limited, but cumulatively considerable? ("Cumulatively considerable" means that the incremental effects of a project are considerable when viewed in connection with the effects of past projects, the effects of other current projects, and the effects of probable future projects)?	☐	☐	☒	☐

The proposed project does not have cumulative impacts. The proposed project will not induce growth, as the project does not require additional infrastructure beyond that necessary to serve the project. Since, there aren't any impacts that could be deemed cumulatively considerable, the proposed project would have a less than significant impact.

d) Does the project have environmental effects which will cause substantial adverse effects on human beings, either directly or indirectly?	☐	☐	☒	☐

The project entails subdividing an existing residential lot into 2 single-family residential parcels in an R-A (Residential-Agricultural) zone. The proposed project would not threaten the health, safety or welfare of human beings. Therefore, the proposed project would have a less than significant impact on human beings.

Marie A. Pavlovic

From: Franklin Ruedel [taxprofrank@frankruedel.com]
Sent: Wednesday, February 04, 2015 12:34 AM
To: Marie A. Pavlovic
Subject: FW: Report 2013-02483 8828 ardendale ave san Gabriel, CA91775

Follow Up Flag: Follow up
Flag Status: Flagged

From: Franklin Ruedel
Sent: Tuesday, February 03, 2015 10:54 PM
To: 'mpavloic@lacounty.gov'
Subject: Report 2013-02483 8828 ardendale ave san gabriel, CA91775

Ms Pavloic

I am very much concerned about the proposed project for the above address in San Gabriel Northern section. I would first like to have a copy of the proposal as I did see it at the Library but hopefully you can forward a pdf version as an attachment. Thank you
As a starter I am concerned for the historicity of the area. Residence was built in 1926 after being purchased by a Canadian lady in 1920 she developed it as her winter home a get away from her Canadian residence. Then it was owned by a family form the Southern part of our great land. Then a family owned who had a Spanish maid who painted the kitchen cabinets with her own special way of painting. There were other families who also owned this house and each added to her beauty. She is built with Spanish architecture which is so demising today I the look alike houses that are now being built.
The homes on the easterly end of Ardendale from 8828 westerly were all there much older than the homes going west as they were built in the 50's. The electric grid stops with this house and picks up again for the rest of the street. Her roofing tile cannot be replaced today. She withstood the Tihapi earth quake, then the Whittier, Sylmar and others. When the county came by to verify that she was still sound to live in after the Whittier quake she was given a good bill of health. Since her type of construction could move with the quake and protect the residence who lived there.

The residence to the east of her is the 3rd generation same owner. To the east of that is again an home which has been there many years back into the 1930's or before the next house was built in 1935
The house just before the corner also there since the 1930 and before. The house across the street was owned my Mayes the original owner of all the land in the area before any development had begun. Hence why the north and south street just east of her is known as Mayesdale.

I tell you all of this to state that this house along with the westerly end of the street is one that should be kept and brought back to her original condition and not be allowed to further deteriorate . I could just go on about the neighborhood and its richness and how we need not make this change.
One item I bring to your attention is how the county has kept the wealth in the homes west of the electrical lines and let the wealth leave the homes east of the electrical lines. I am available to answer what further questions you might have as to this house and the neighborhood and await your response to my request that this lot split be denied. And keep the home as one to be preserved for generations to come to enjoy her for she truly a grand place to let live not to destroy.

By the way why a side walk to nowhere in the middle of the block. You see this street has the original rolled tar on both side of the street which tells you that it was there when the area was grape vineyard as it was named Invendale, and we have Muscatel, Sultana, Duarte, all grape names then the land became rich orange groves prior to the 50's these rolled streets are on Duarte, Ardendale and Emperor all original streets of the neighborhood had the rolled curbs while the

newer streets have the traditional curbs and gutters. Then there is the gutter just to the east of her which runs from nowhere to nowhere.
So come back with your questions and let me give you a second thought on this change and help you to realize how much more tax dollar she will be worth in keeping her alive and not destroying her and a project come in that brings down the county tax valuation. Yes I will do my best to be at this hearing also request that she be preserved.
If you have an prescribed petition send to me and I will endeavor to get some more names for you. Come to our side of the greater San Gabriel Valley which is bigger than San Fernando valley and I can have the pleasure of showing you of why this house has history and not destroy her.

Franklin J. Ruedel, EA

The Tax Professional with the "CAN DO" Attitude

If you are not familiar with EA, PLEASE ASK?
Tax and Audit referrals appreciated
San Gabriel, CA 91775
Tel: 626-286-9662 Fax: 626-285-2107

E-mail: taxprofrank@frankruedel.com , http://www.frankruedel.com , http://www.facebook.com/TaxProFrank ,

Confidentiality Notice: This communication and any accompanying document(s) are confidential and privileged. They are intended for the sole use of intended recipient. If you receive this transmission in error, you are hereby advised that any disclosure, copying, distribution or the taking of any action in reliance upon the communication is strictly prohibited. If you have received this communication in error, please contact me at taxprofrank@frankruedel.com, or by telephone at 626-286-9662, and then permanently delete this E-mail including all attachments. Thank you

Zoning Code Compliance Response:

1. Acknowledged
2. Two garage doors are now provided

6KUD393
2013/08/29

3. Trellis removed

4. Carport Removed

5. Junk and refuse removed

6. See tentative map for new location of storage at the back

7. Front yard fence removed (the remaining fence at the NEcorner is neighbor's)

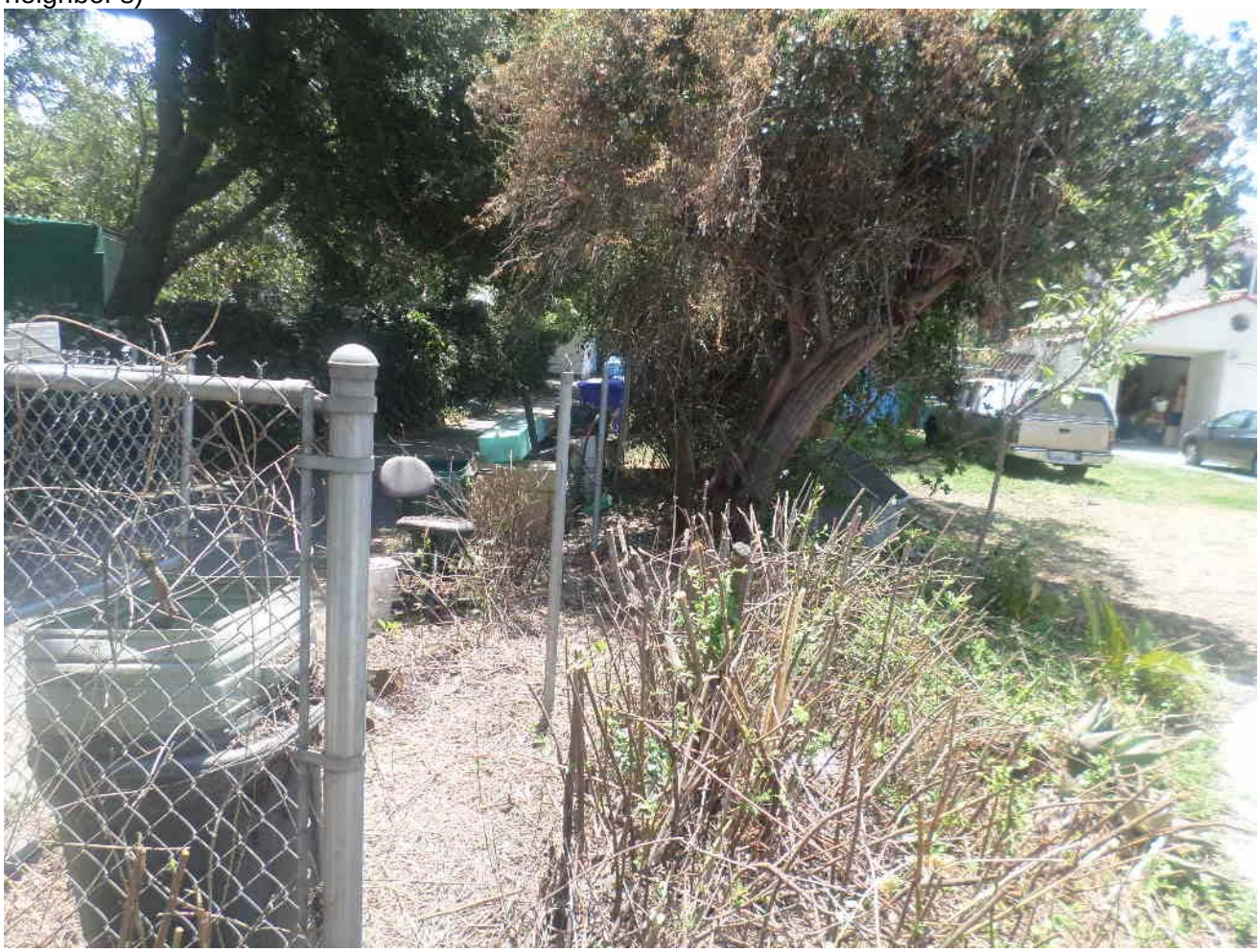

2013/07/12

2013/07/12

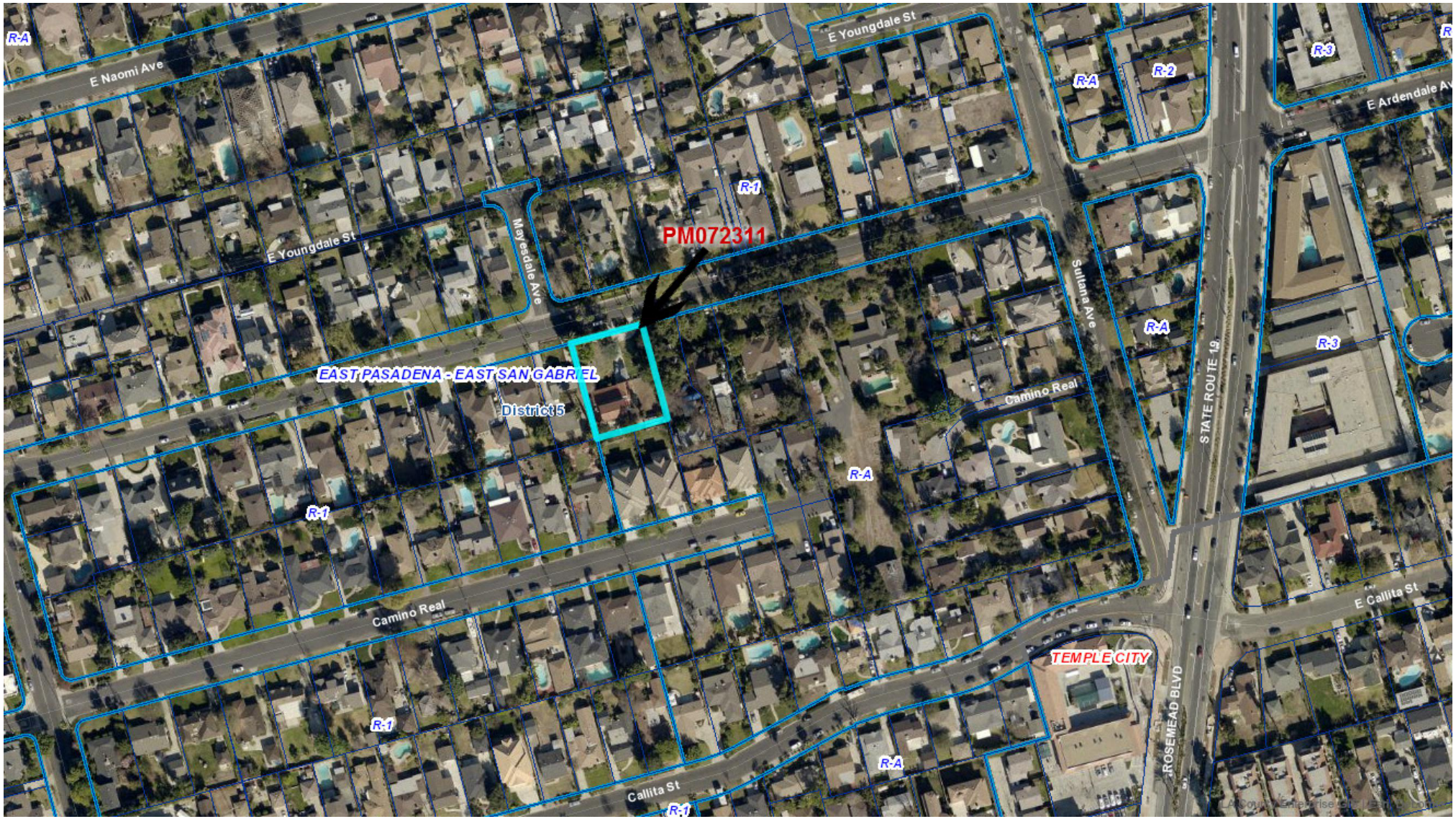

Created in GIS-NET3

Aerial Map

Printed: Jan 27, 2015

0 500
Feet

Copyright 2013 - Los Angeles County Department of Regional Planning, GIS Section. Note: This map represents a quick representation of spatial imagery or vector layers using GIS-NET3. The map should be interpreted in accordance with the GIS-NET3 Public disclaimer statement. Printed with permission from the Los Angeles County Dept. of Regional Planning. All rights reserved.

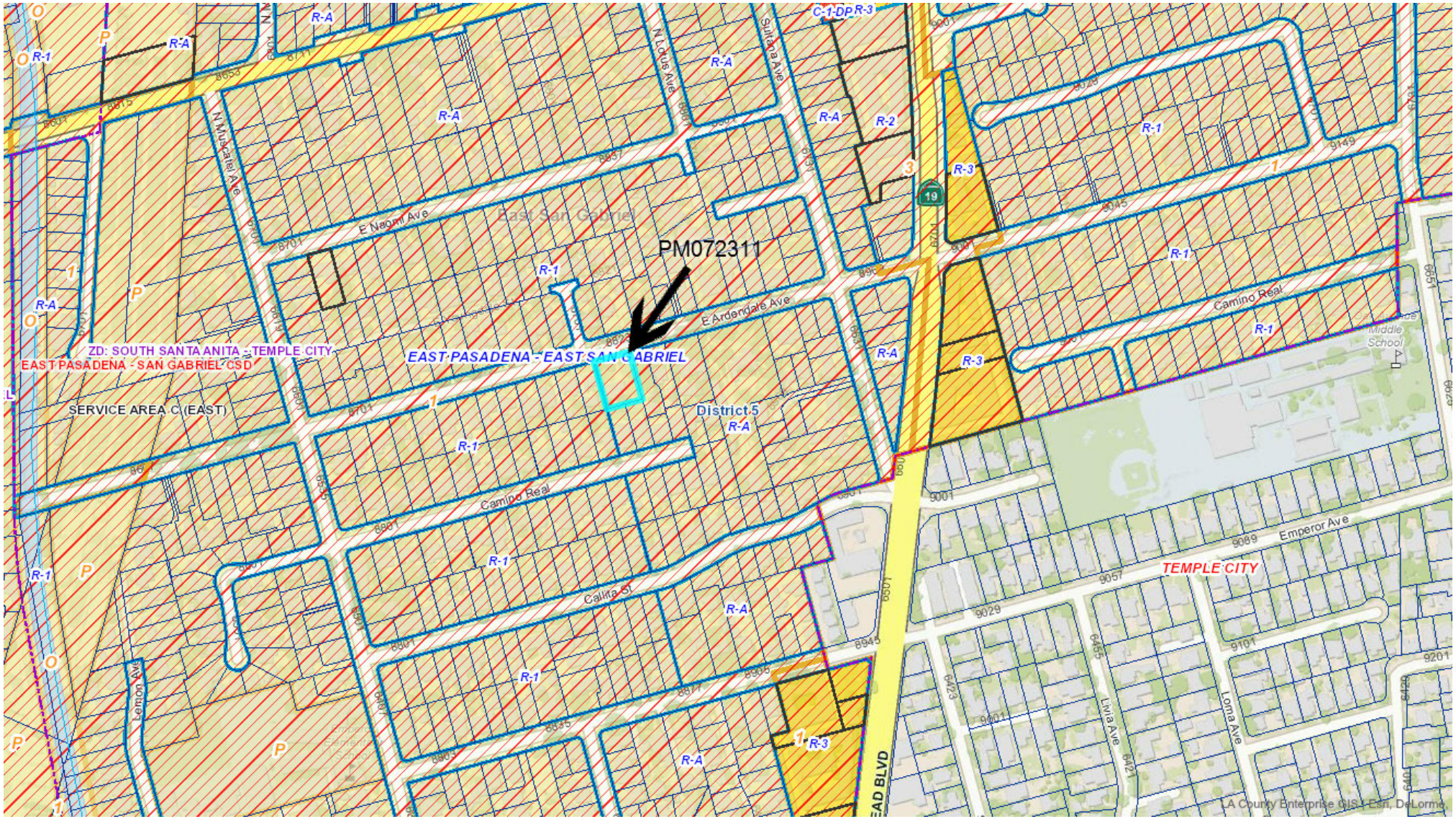

Created in GIS-NET3

GIS MAP

Printed: Jan 20, 2015

0 1,000

Feet

Copyright 2013 - Los Angeles County Department of Regional Planning, GIS Section. Note: This map represents a quick representation of spatial imagery or vector layers using GIS-NET3. The map should be interpreted in accordance with the GIS-NET3 Public disclaimer statement. Printed with permission from the Los Angeles County Dept. of Regional Planning. All rights reserved.

ENGINEER:
JACK LEE, RCE 40870
576 E. LAMBERT ROAD,
BREA, CA 92821
TEL: 714.671.1050
FAX: 714.671.1090

DEPT OF REGIONAL PLANNING
PM072311 TENTATIVE
30 APR 2014

"MINOR LAND DIVISION
TENTATIVE PARCEL MAP NUMBER 072311
LOCATED IN THE UNINCORPORATED TERRITORY OF
THE COUNTY OF LOS ANGELES, STATE OF CALIFORNIA"

PORTION OF PARCELS 1 AND 2, PARCEL MAP NO. 3782, IN THE COUNTY OF LOS ANGELES, STATE OF CALIFORNIA, AS PER MAP RECORDED IN BOOK 53, PAGE 83, IOF PARCEL MAPS, IN THE COUNTY RECORDER OFFICE OF LOS ANGELES COUNTY.

APN: 5381-027-048

UTILITIES:

WATER	– SUNNY SLOPE WATER COMPANY
SEWER	– COUNTY OF LA SANITATION DISTRICT 15
GAS	– SOUTHERN CALIFORNIA GAS CO.
ELECTRICAL	– SOUTHERN CALIFORNIA EDISON CO.
TELEPHONE	– SBC COMMUNICATIONS
TRASH	– ATHENS WASTE DISPOSAL
CABLE TV	– CHARTER COMMUNICATION CABLE

PROJECT INFORMATION:

APN#:	5381–027–048
PRESENT ZONE :	R–A
PROPOSED ZONE:	R–A
LOT SIZE :	0.379 ACRES (16,519.41 S.F)
EXISTING LOT:	1
PROPOSED LOT:	2
PROJECT DESCRIPTION:	2 LOT SUBDIVISION
EXISTING LAND USE:	SINGLE FAMILY RESIDENCE
PROPOSED LAND USE:	SINGLE FAMILY RESIDENCE

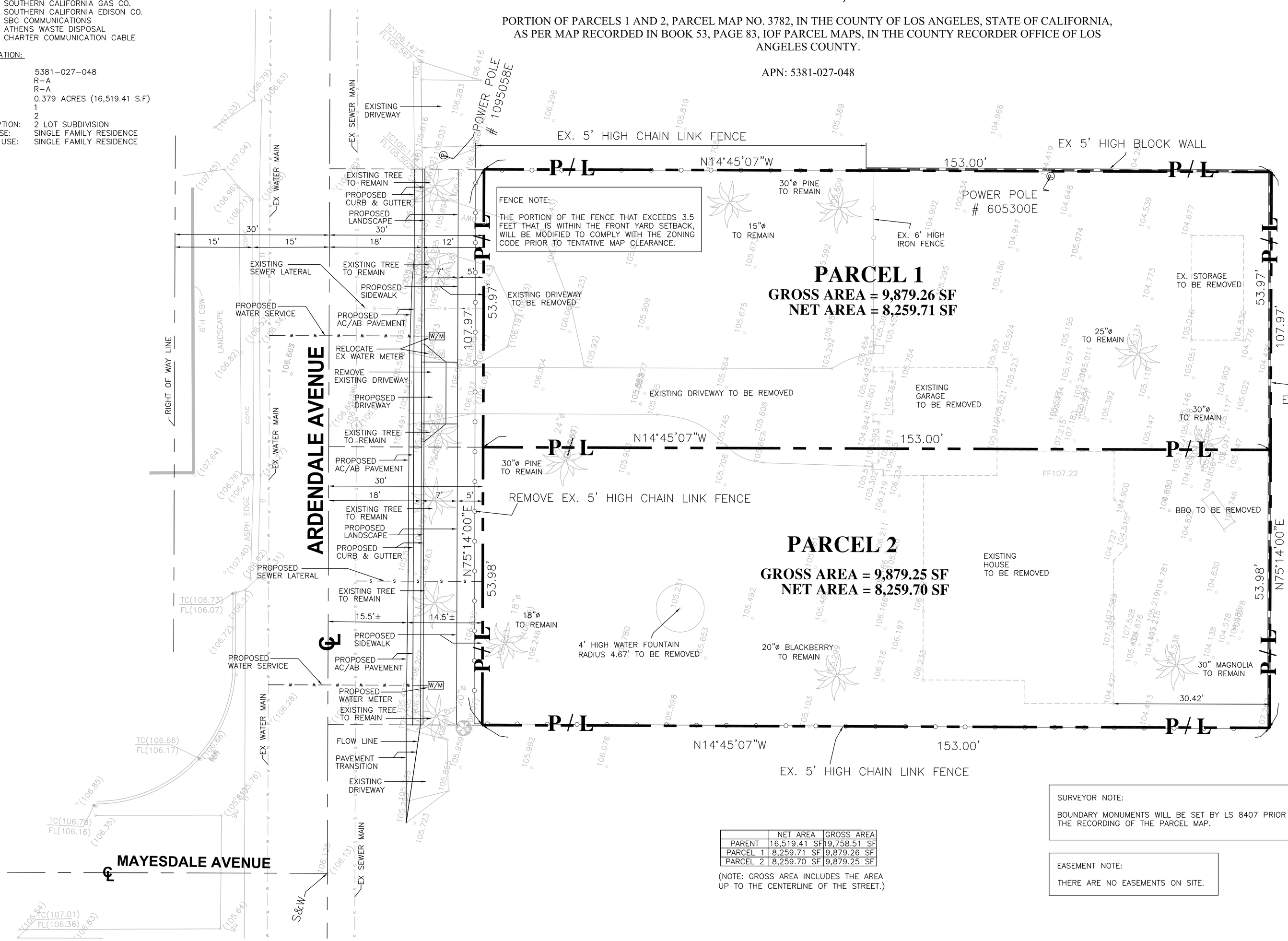

VICINITY MAP N.T.S.

PROTECTION NOTE:

PROTECT–IN–PLACE EVERYTHING UNLESS OTHERWISE STATED ON THIS PLAN

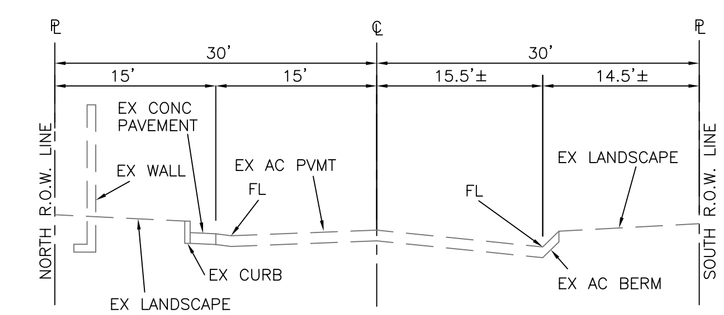

EXISTING ARDENDALE AVE STREET SECTION
VERTICAL: 1"=5'
HORIZONTAL: 1"=10'

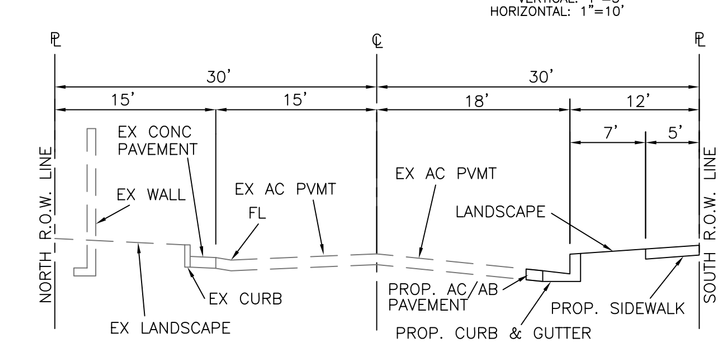

PROPOSED ARDENDALE AVE STREET SECTION
VERTICAL: 1"=5'
HORIZONTAL: 1"=10'

	NET AREA	GROSS AREA
PARENT	16,519.41 SF	19,758.51 SF
PARCEL 1	8,259.71 SF	9,879.26 SF
PARCEL 2	8,259.70 SF	9,879.25 SF

(NOTE: GROSS AREA INCLUDES THE AREA UP TO THE CENTERLINE OF THE STREET.)

SURVEYOR NOTE:

BOUNDARY MONUMENTS WILL BE SET BY LS 8407 PRIOR TO THE RECORDING OF THE PARCEL MAP.

EASEMENT NOTE:

THERE ARE NO EASEMENTS ON SITE.

0 10 20
1"=10'

TENTATIVE PARCEL MAP
MAP NUMBER 072311

REGISTERED PROFESSIONAL ENGINEER
JACK C. S. LEE
40870
Exp. 3-31-15
CIVIL
STATE OF CALIFORNIA

BENCHMARK:

FD. SPIKE AND WASHER AT THE INTERSECTION OF ARDENDALE AVENUE AND SULTANA AVENUE

ELEVATION= 104.626

PROJECT LOCATION:

8828 ARDENDALE AVE,
SAN GABRIEL, CA 91775

OWNER:

KUEI YUEH HSU
8828 ARDENDALE AVE,
SAN GABRIEL, CA 91775

TEL: (626)–512–5239

DRAWN:	RR
CHECKED:	
DATE:	4/30/2014
JOB NO.:	13–023–023
SCALE:	1" = 10'
FILE NAME:	

CALLAND ENGINEERING, INC.
dba QUARTECH CONSULTANTS
576 E. LAMBERT ROAD, BREA, CA 92821
TEL: (714) 671–1050 FAX: (714) 671–1090

T-1

LOS ANGELES COUNTY DEPARTMENT OF REGIONAL PLANNING

NOTICE OF PUBLIC HEARING
NOTICE OF INTENT TO ADOPT A NEGATIVE DECLARATION

The Los Angeles County Regional Planning Commission will conduct a public hearing to consider the project described below. You will have an opportunity to testify, or you can submit written comments to the planner below or at the public hearing. If the final decision on this proposal is challenged in court, testimony may be limited to issues raised before or at the public hearing.

H D T : February 18, 2015 at 9:00 a.m.
H L : 320 West Temple St., Hall of Records, Rm. 150, Los Angeles, CA 90012

P P ( ): Project No. R2013-02483, Permit No. PM072311 & RCSD T201300004
P L : 8828 Ardendale Avenue, San Gabriel within the South Santa Anita-Temple City Zoned District
CEQA P R P : January 15, 2015 to February 18, 2015.
P D : A tentative parcel map to create two single-family lots pursuant to Los Angeles County (LAC) Code section 21.40.010. Also, a Community Standards District Modification to reduce the lot width and street frontage of both lots within the East Pasadena-South San Gabriel Community Standards District pursuant to Code Section 22.44.135(C)(4)(a).

For more information regarding this application, contact **M P** , Los Angeles County Department of Regional Planning (DRP), 320 W. Temple St., Los Angeles, CA 90012. Telephone: (213) 974-6433, Fax: (213) 626-0434, E-mail: mpavlovic@planning.lacounty.gov. Case materials are available online at http://planning.lacounty.gov/case or at Temple City Library, 5939 Golden West Avenue/Temple City, 91780. All correspondence received by DRP shall be considered a public record.

If you need reasonable accommodations or auxiliary aids, contact the Americans with Disabilities Act (ADA) Coordinator at (213) 974-6488 (Voice) or (213) 617-2292 (TDD) with at least 3 business days' notice. **S**
(213) 74 433

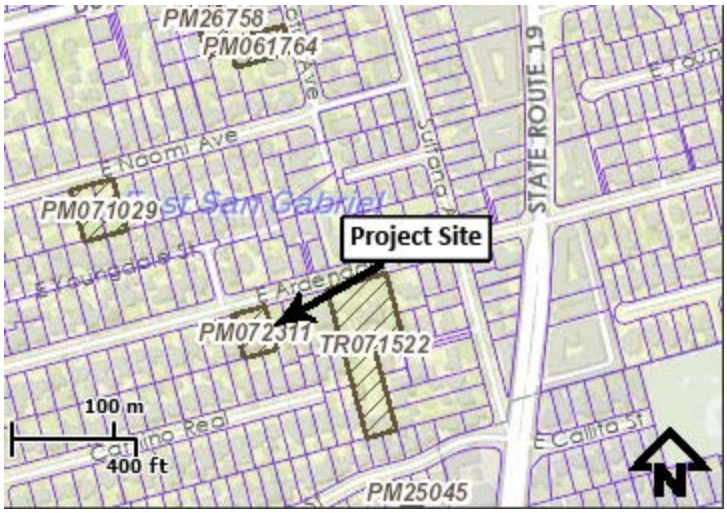
PM26758
PM061764
E Naomi Ave
PM071029
St Sam Gabriel
Project Site
E Youngdale St
E Ardena
PM072311
TR071522
100 m
400 ft
Camino Real
E Calita St
PM25045
STATE ROUTE 19
N