DEPT OF REGIONAL PLANNING
PM072311 EXHIBIT
30 APR 2014

EXHIBIT A

PORTION OF PARCELS 1 AND 2, PARCEL MAP NO. 3782, IN THE COUNTY OF LOS ANGELES, STATE OF CALIFORNIA, AS PER MAP RECORDED IN BOOK 53, PAGE 83, IOF PARCEL MAPS, IN THE COUNTY RECORDER OFFICE OF LOS ANGELES COUNTY.

APN: 5381-027-048

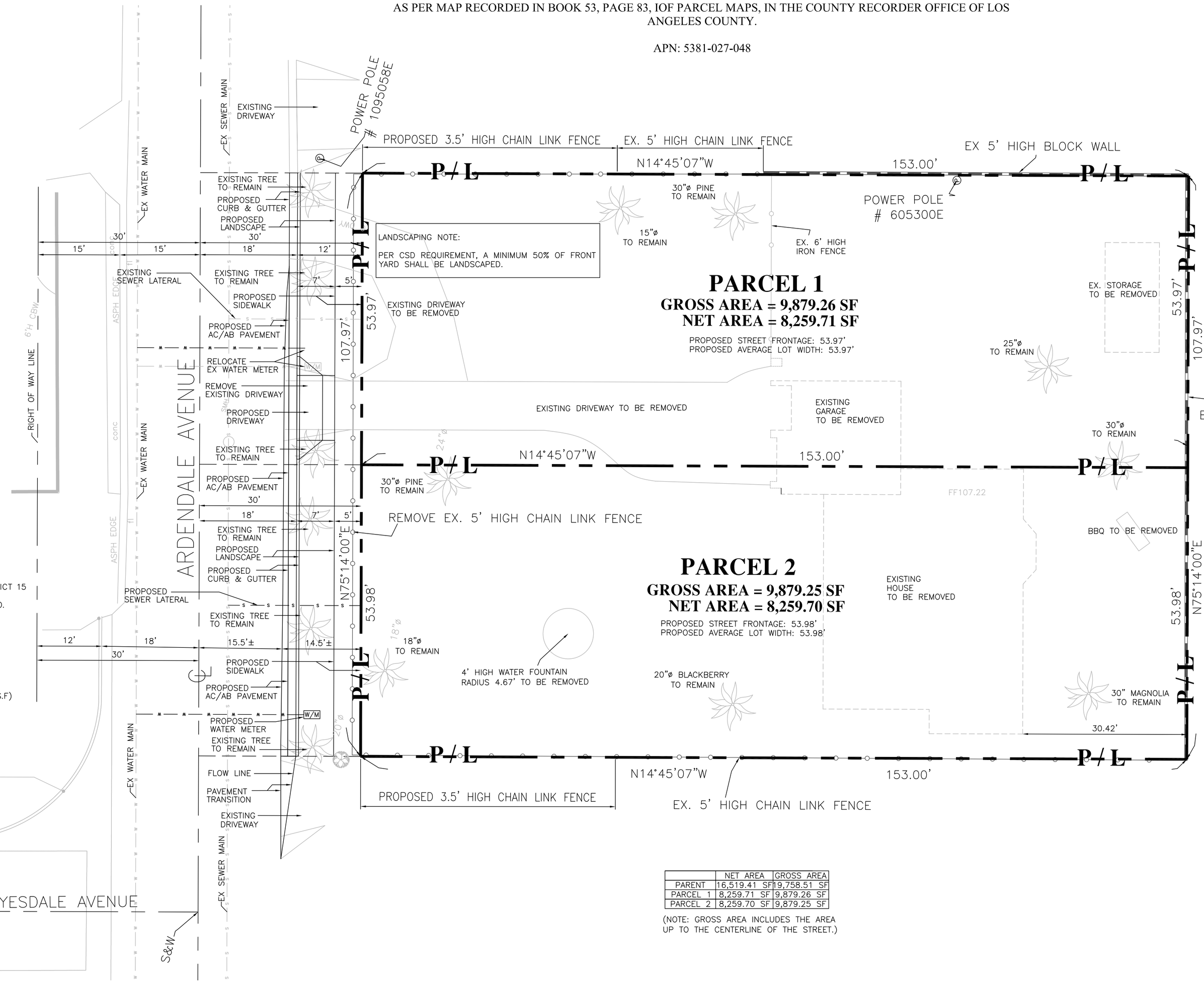

VICINITY MAP N.T.S.

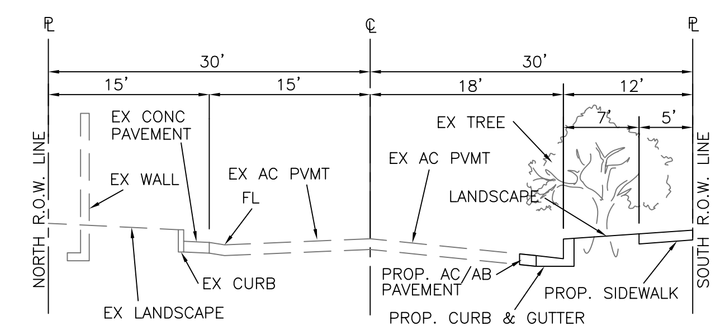

PROPOSED ARDENDALE AVE STREET SECTION
VERTICAL: 1"=5'
HORIZONTAL: 1"=10'

ENGINEER:
JACK LEE, RCE 40870
576 E. LAMBERT ROAD,
BREA, CA 92821
TEL: 714.671.1050
FAX: 714.671.1090

UTILITIES:

WATER	– SUNNY SLOPE WATER COMPANY
SEWER	– COUNTY OF LA SANITATION DISTRICT 15
GAS	– SOUTHERN CALIFORNIA GAS CO.
ELECTRICAL	– SOUTHERN CALIFORNIA EDISON CO.
TELEPHONE	– SBC COMMUNICATIONS
TRASH	– ATHENS WASTE DISPOSAL
CABLE TV	– CHARTER COMMUNICATION CABLE

PROJECT INFORMATION:

APN#:	5381–027–048
PRESENT ZONE :	R–A
PROPOSED ZONE:	R–A
LOT SIZE :	0.379 ACRES (16,519.41 S.F)
EXISTING LOT:	1
PROPOSED LOT:	2
PROJECT DESCRIPTION:	2 LOT SUBDIVISION
EXISTING LAND USE:	SINGLE FAMILY RESIDENCE
PROPOSED LAND USE:	SINGLE FAMILY RESIDENCE

	NET AREA	GROSS AREA
PARENT	16,519.41 SF	19,758.51 SF
PARCEL 1	8,259.71 SF	9,879.26 SF
PARCEL 2	8,259.70 SF	9,879.25 SF

(NOTE: GROSS AREA INCLUDES THE AREA UP TO THE CENTERLINE OF THE STREET.)

0 10 20
1"=10'

REGISTERED PROFESSIONAL ENGINEER
JACK C. S. LEE
40870
Exp. 3-31-15
CIVIL
STATE OF CALIFORNIA

BENCHMARK:
FD. SPIKE AND WASHER AT THE INTERSECTION OF ARDENDALE AVENUE AND SULTANA AVENUE
ELEVATION= 104.626

PROJECT LOCATION:
8828 ARDENDALE AVE,
SAN GABRIEL, CA 91775

OWNER:
KUEI YUEH HSU
8828 ARDENDALE AVE,
SAN GABRIEL, CA 91775
TEL: (626)–512–5239

DRAWN: RR
CHECKED:
DATE: 4/30/2014
JOB NO.: 13–023–023
SCALE: 1" = 10'
FILE NAME:

CALLAND ENGINEERING, INC.
dba QUARTECH CONSULTANTS
576 E. LAMBERT ROAD, BREA, CA 92821
TEL: (714) 671–1050 FAX: (714) 671–1090

T-1