CONTECH®
ENGINEERED SOLUTIONS

Precast Details

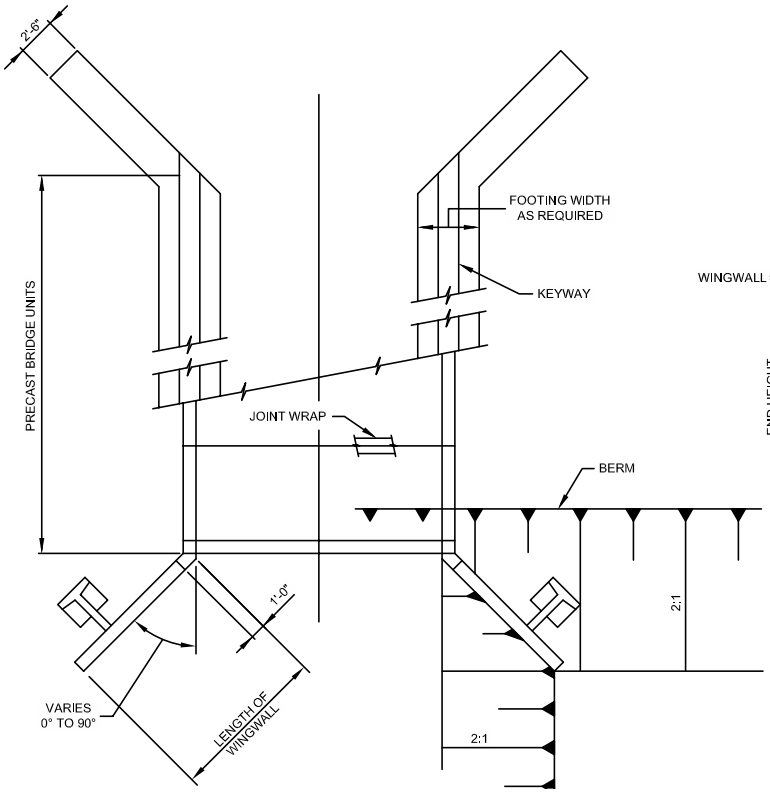

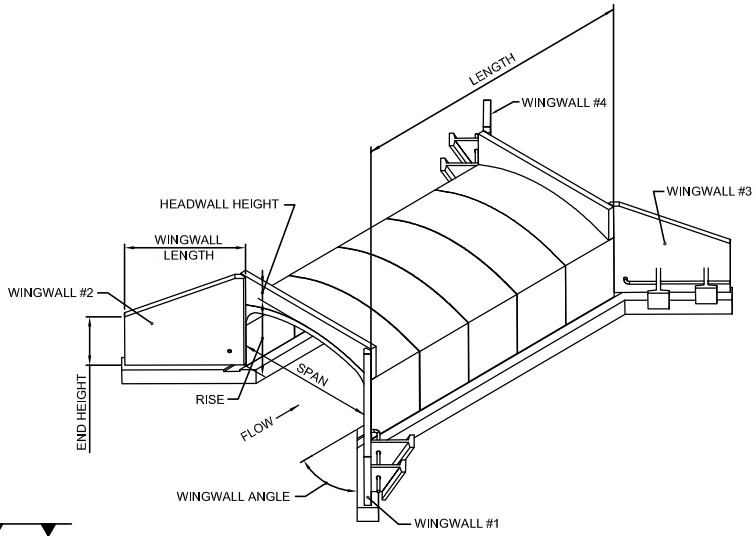

Buried Structure vs. Bridge-at-Grade

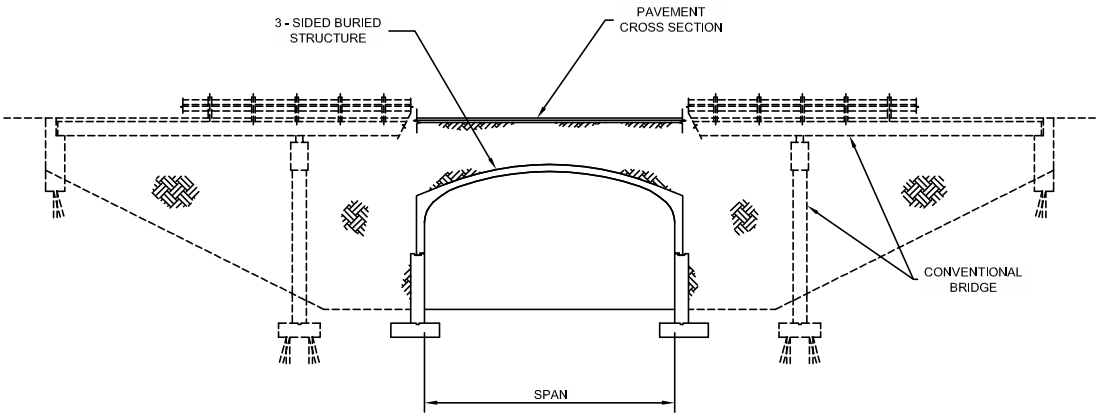

DESIGN SPECIFICATIONS

AASHTO:
Standard Specifications for Highway Bridges - Section 16.8
LRFD Bridge Design Specifications - Section 12.14

MANUFACTURING SPECIFICATIONS

ASTM C1504

CON SPAN® BRIDGE SYSTEMS

BEBO® Arch Systems

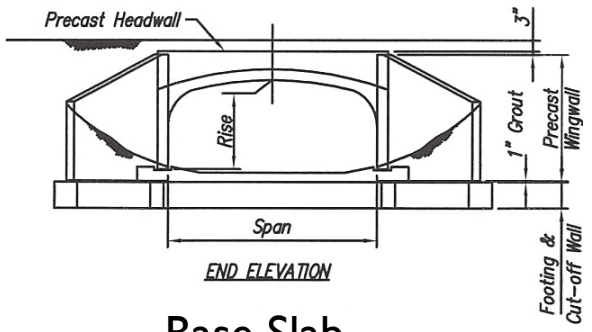

Base Slab

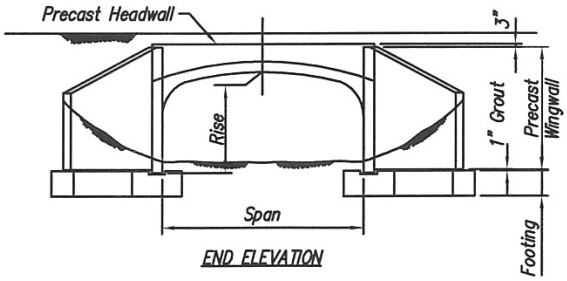

Strip Footing

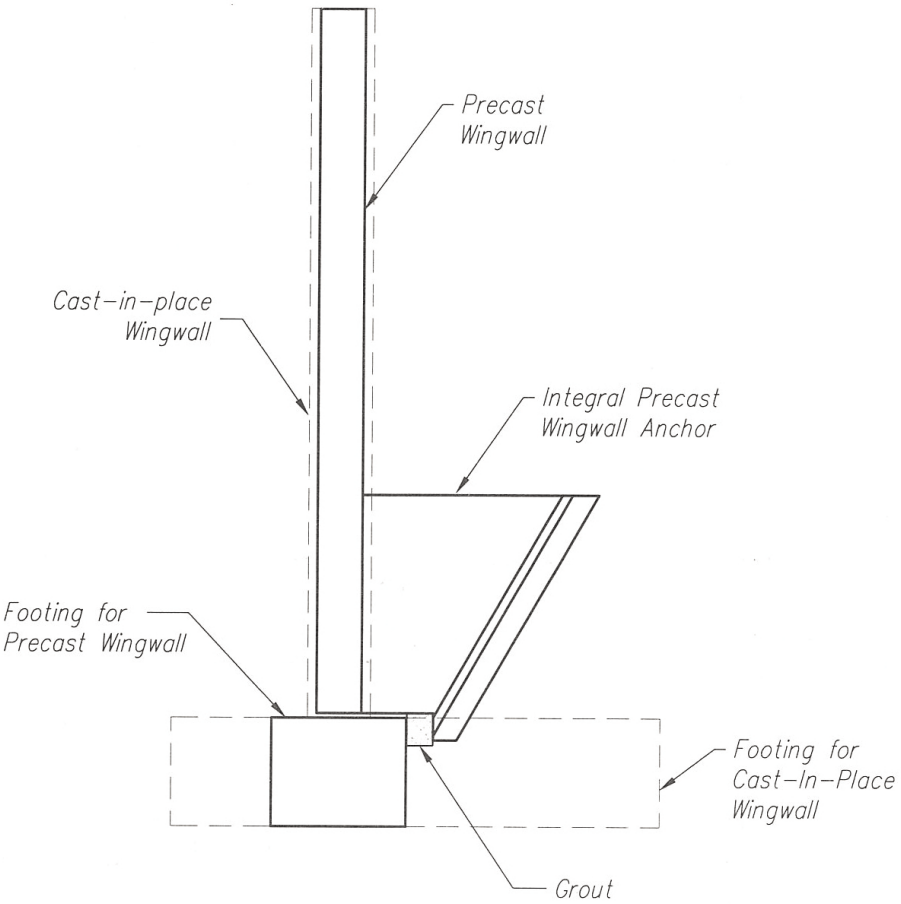

Significant Economic Advantages are Gained from Precast Wingwalls through:

- Narrower Footings
- Thinner Walls
- Reduced Excavation

Footing Details

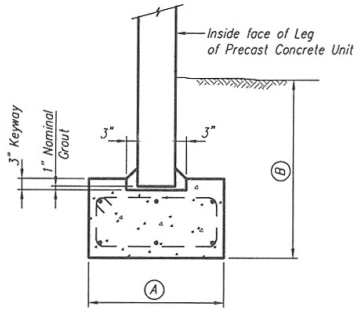

Strip Footing

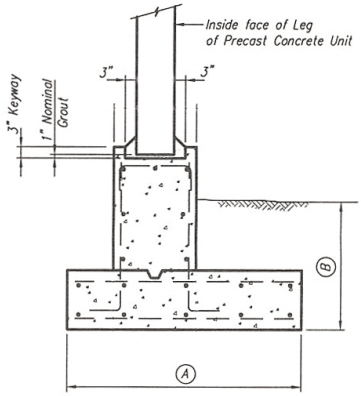

Pedestal Wall Footing

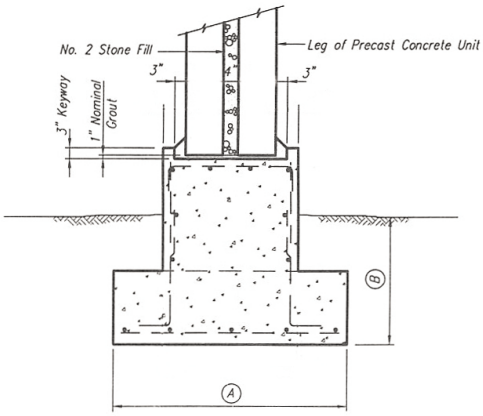

Multi Cell Pier Footing

CON/SPAN® BRIDGE SYSTEMS

STANDARD CON/SPAN® BRIDGE UNITS																								
WATERWAY AREA (FT.^{2})													WEIGHT (TONS/FT.)											
RISE (FT.)	SPAN (FEET)												SPAN (FEET)											
	12	14	16	20	24	28	32	36	42	48	54	60	12	14	16	20	24	28	32	36	42	48	54	60
3	30	*	*	*	*	*	*	*	*	*	*	*	.94	*	*	*	*	*	*	*	*	*	*	*
4	42	50	55	65	*	*	*	*	*	*	*	*	1.04	1.14	1.59	1.73	*	*	*	*	*	*	*	*
5	54	64	71	85	95	*	*	*	*	*	*	*	1.14	1.24	1.71	1.86	2.05	*	*	*	*	*	*	*
6	66	78	87	105	119	139	*	*	*	*	*	*	1.24	1.34	1.83	1.99	2.18	2.84	*	*	*	*	*	*
7	78	92	103	125	143	167	184	*	*	*	*	*	1.34	1.44	1.96	2.12	2.31	2.99	3.56	*	*	*	*	*
8	90	106	119	145	167	195	216	232	*	*	*	*	1.44	1.54	2.09	2.24	2.44	3.14	3.71	4.06	*	*	*	*
9	102	120	135	165	191	223	248	268	*	*	*	*	1.54	1.64	2.21	2.36	2.57	3.29	3.86	4.23	*	*	*	*
10	114	134	151	185	215	251	280	304	334	387	435	*	1.64	1.74	2.33	2.49	2.69	3.44	4.01	4.40	4.87	5.27	6.52	*
11	*	*	*	*	239	279	312	340	376	435	489	*	*	*	*	*	2.81	3.59	4.16	4.58	5.04	5.48	6.72	*
12	*	*	*	*	*	*	344	376	418	483	543	578	*	*	*	*	*	*	4.31	4.76	5.21	5.67	6.92	7.76
13	*	*	*	*	*	*	*	412	460	531	599	638	*	*	*	*	*	*	*	4.93	5.38	5.88	7.12	7.98
14	*	*	*	*	*	*	*	448	501	579	652	698	*	*	*	*	*	*	*	5.11	5.58	6.08	7.32	8.21

ARCH LAY LENGTHS (Nominal)

12'-24' SPAN	8' LAY LENGTH
28'-42' SPAN	6' LAY LENGTH
48'-60' SPAN	4' LAY LENGTH

*1/4" Joints between Precast Concrete Units

Backfill Requirements

Backfill is a key component of any buried structure.
Please refer to the precast element specifications for detailed requirements.

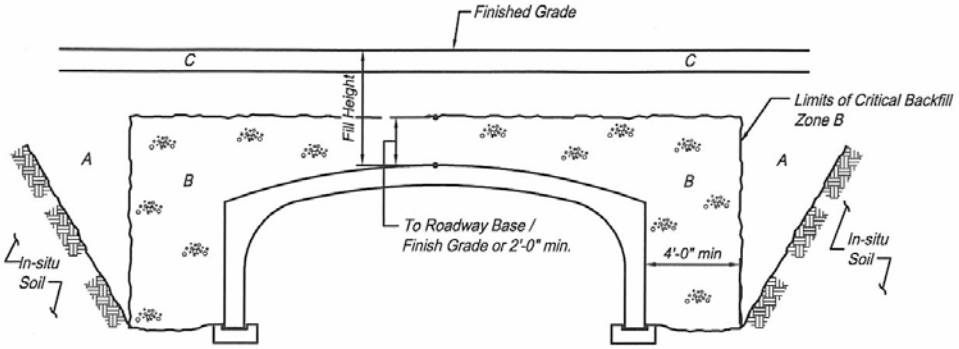

CON/SPAN® Arch

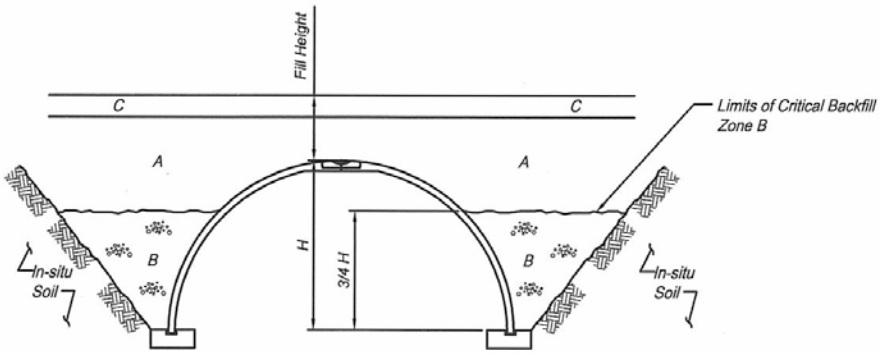

BEBO® Arch

1. In-situ material must be sufficiently stable to allow support of the precast units.
2. Zone A: Embankment or overfill material shall be properly graded and compacted, per project specifications.
3. Zone B: Structural backfill material per CON/SPAN® or BEBO® specifications. (Generally, a well-graded angular sand or gravel placed in 8" lifts and compacted to 95% of the maximum dry density, per AASHTO T-99 specification.)
4. Zone C: Roadway base and surface materials, per project specifications.

BEBO® Arch Systems

E-Series Single Leaf

BEBO SERIES	SPAN (FEET)	RISE (FEET)	WATERWAY AREA (SF)	WEIGHT PER FOOT LENGTH (TONS)
E12	11'-2"	3'-6"	28	0.74
E12	11'-9 1/2"	4'-6"	40	0.84
E12	12'-0"	5'-6"	52	0.95
E12	12'-0"	6'-6"	64	1.06
E16	14'-4 1/2"	3'-10"	40	0.88
E16	15'-3 1/2"	4'-10"	54	1.00
E16	15'-10"	5'-10"	70	1.11
E16	16'-0"	6'-10"	86	1.21
E16	16'-0"	7'-10"	102	1.31
E20	18'-7"	5'-2"	70	1.16
E20	19'-4 1/2"	6'-2"	89	1.27
E20	19'-10"	7'-2"	108	1.37
E20	20'-0"	8'-2"	128	1.48
E20	20'-0"	9'-2"	148	1.58
E24	22'-9"	6'-6"	108	1.42
E24	23'-5 1/2"	7'-6"	132	1.53
E24	23'-10 1/2"	8'-6"	155	1.64
E24	24'-0"	9'-6"	179	1.74
E24	24'-0"	10'-6"	203	1.84
E24	24'-0"	11'-6"	227	1.94
E30	28'-11 1/2"	8'-6"	182	2.27
E30	29'-6 1/2"	9'-6"	211	2.43
E30	29'-11"	10'-6"	241	2.56
E30	30'-0"	11'-6"	271	2.69
E30	30'-0"	12'-6"	301	2.81
E30	30'-0"	13'-6"	331	2.94
E36	34'-8 1/2"	9'-2"	235	2.63
E36	35'-4 1/2"	10'-2"	270	2.78
E36	35'-9 1/2"	11'-2"	305	2.91
E36	36'-0"	12'-2"	341	3.05
E36	36'-0"	13'-2"	377	3.16
E42	40'-8 1/2"	10'-2"	307	3.05
E42	41'-4 1/2"	11'-2"	348	3.20
E42	41'-9 1/2"	12'-2"	389	3.33
E42	42'-0"	13'-2"	431	3.46
E48	47'-4"	12'-1"	431	3.96
E48	47'-9"	13'-1"	479	4.10

T-Series Single Leaf

BEBO SERIES	SPAN (FEET)	RISE (FEET)	WATERWAY AREA (SF)	WEIGHT PER FOOT LENGTH (TONS)
T22	22	2'-7 1/4"	39.1	1.49
T24	24	3'-2 1/4"	53.4	1.64
T26	26	3'-2 1/2"	56.1	1.58
T28	28	3'-9"	71.0	1.71
T30	30	4'-4 1/4"	88.6	1.84
T32	32	5'-0 1/4"	109.2	1.97
T34	34	4'-0 1/2"	92.0	2.27
T36	36	4'-6 1/2"	110.2	2.41
T38	38	5'-1"	130.8	2.55
T40	40	5'-8 1/4"	154.1	2.70
T42	42	6'-4"	180.4	2.85
T44	44	5'-4"	158.4	3.51
T46	46	5'-10 1/2"	182.3	3.68
T48	48	6'-5 1/4"	208.7	3.85
T50	50	7'-0"	237.8	4.03
T52	52	7'-8"	269.7	4.20
T54	54	6'-8"	242.9	4.29
T56	56	7'-3"	272.5	4.46
T58	58	7'-9"	304.6	4.64
T60	60	8'-4"	339.5	4.81
T62	62	9'-0"	377.2	4.99

ARCH LAY LENGTHS (Nominal)

E12 - E24:	8' LAY LENGTH
E30 - E66T:	6' LAY LENGTH
E72T - E84T:	4' LAY LENGTH
C30T - C54T:	6' LAY LENGTH
T22 - T24:	6' LAY LENGTH
T26 - T42:	8' LAY LENGTH
T44 - T52:	6' LAY LENGTH
T54 - T62:	4' LAY LENGTH
T64 - T82:	6' LAY LENGTH
T84 - T102:	4' LAY LENGTH

*1/2" Joints between Precast Concrete Units

C-Series Twin Leaf

BEBO SERIES	SPAN (FEET)	RISE (FEET)	WATERWAY AREA (SF)	WEIGHT PER FOOT LENGTH (TONS)
C30T	29'-4"	11'-4"	260	2.61
C30T	29'-9"	12'-4"	290	2.73
C30T	29'-11"	13'-4"	319	2.86
C30T	30'-0"	14'-4"	349	2.98
C30T	30'-0"	15'-4"	379	3.11
C30T	30'-0"	16'-4"	409	3.24
C30T	30'-0"	17'-4"	439	3.36
C30T	30'-0"	18'-4"	469	3.49
C36T	35'-6"	14'-4"	397	3.53
C36T	35'-9 1/2"	15'-4"	433	3.67
C36T	35'-11 1/2"	16'-4"	469	3.81
C36T	36'-0"	17'-4"	505	3.94
C36T	36'-0"	18'-4"	541	4.08
C36T	36'-0"	19'-4"	577	4.22
C36T	36'-0"	20'-4"	613	4.36
C36T	36'-0"	21'-4"	648	4.50
C36T	36'-0"	22'-4"	685	4.64
C36T	36'-0"	23'-4"	721	4.77
C42T	41'-7"	17'-0"	549	4.57
C42T	41'-10"	18'-0"	590	4.72
C42T	41'-11 1/2"	19'-0"	632	4.87
C42T	42'-0"	20'-0"	674	5.02
C42T	42'-0"	21'-0"	716	5.17
C42T	42'-0"	22'-0"	758	5.32
C42T	42'-0"	23'-0"	800	5.47
C42T	42'-0"	24'-0"	842	5.63
C42T	42'-0"	25'-0"	884	5.78
C42T	42'-0"	26'-0"	926	5.93
C54T	52'-7 1/2"	20'-4"	819	5.95
C54T	53'-0 1/2"	21'-4"	871	6.11
C54T	53'-5"	22'-4"	925	6.28
C54T	53'-8"	23'-4"	978	6.45
C54T	53'-10"	24'-4"	1032	6.62
C54T	53'-11 1/2"	25'-4"	1086	6.79
C54T	54'-0"	26'-4"	1140	6.96

E-Series Twin Leaf

BEBO SERIES	SPAN (FEET)	RISE (FEET)	WATERWAY AREA (SF)	WEIGHT PER FOOT LENGTH (TONS)
E54T	53'-7"	14'-0"	588	4.96
E54T	53'-11"	15'-0"	641	5.12
E54T	54'-0"	16'-0"	695	5.28
E54T	54'-0"	17'-0"	749	5.41
E54T	54'-0"	18'-0"	803	5.58
E54T	54'-0"	19'-0"	857	5.73
E54T	54'-0"	20'-0"	911	5.88
E60T	59'-11"	17'-0"	807	6.65
E60T	60'-0"	18'-0"	867	6.80
E60T	60'-0"	19'-0"	927	7.01
E60T	60'-0"	20'-0"	987	7.18
E60T	60'-0"	21'-0"	1047	7.36
E60T	60'-0"	22'-0"	1107	7.53
E66T	65'-11"	19'-0"	992	7.36
E66T	66'-0"	20'-0"	1058	7.54
E66T	66'-0"	21'-0"	1124	7.72
E66T	66'-0"	22'-0"	1190	7.89
E66T	66'-0"	23'-0"	1256	8.07
E66T	66'-0"	24'-0"	1322	8.24
E72T	71'-8 1/2"	19'-10"	1121	9.02
E72T	71'-11"	20'-10"	1192	9.23
E72T	72'-0"	21'-10"	1264	9.44
E72T	72'-0"	22'-10"	1336	9.64
E72T	72'-0"	23'-10"	1408	9.84
E72T	72'-0"	24'-10"	1480	10.04
E72T	72'-0"	25'-10"	1552	10.24
E78T	77'-9"	21'-10"	1137	9.84
E78T	77'-11"	22'-10"	1415	10.04
E78T	78'-0"	23'-10"	1493	10.25
E78T	78'-0	24'-10"	1571	10.45
E78T	78'-0	25'-10"	1649	10.65
E78T	78'-0	26'-10"	1727	10.85
E78T	78'-0	27'-10"	1805	11.05
E84T	83'-5 1/2"	22'-10"	1489	11.70
E84T	83'-9"	23'-10"	1572	11.94
E84T	83'-11"	24'-10"	1656	12.18
E84T	84'-0"	25'-10"	1740	12.41
E84T	84'-0"	26'-10"	1824	12.64
E84T	84'-0"	27'-10"	1908	12.86
E84T	84'-0"	28'-10"	1992	13.09
E84T	84'-0"	29'-10"	2076	13.31

T-Series Twin Leaf

BEBO SERIES	SPAN (FEET)	RISE (FEET)	WATERWAY AREA (SF)	WEIGHT PER FOOT LENGTH (TONS)
T64T	64	7'-5"	340	5.51
T66T	66	7'-11"	375	5.70
T68T	68	8'-6"	413	5.88
T70T	70	9'-1"	454	6.07
T72T	72	9'-8"	497	6.26
T74T	74	8'-9"	460	6.86
T76T	76	9'-4"	504	7.06
T78T	78	9'-10"	545	7.26
T80T	80	10'-5"	592	7.47
T82T	82	11'-1"	641	7.67
T84T	84	10'-0"	599	8.82
T86T	86	10'-7"	646	9.04
T88T	88	11'-2"	695	9.27
T90T	90	11'-9"	747	9.50
T92T	92	12'-4"	802	9.74
T94T	94	11'-5"	755	11.04
T96T	96	11'-11"	808	11.30
T98T	98	12'-6"	863	11.56
T100T	100	13'-1"	921	11.82
T102T	102	13'-8"	982	12.08

© 2012 Contech Engineered Solutions LLC. All rights reserved.