T · · Mobile ·®

SITE NUMBER:	**IE04177A**	**CITY:**	**SAN GABRIEL**
SITE NAME:	**8332 HUNTINGTON**	**COUNTY:**	**L.A. COUNTY**
SITE TYPE:	**ROOFTOP**	**JURISDICTION:**	**COUNTY OF LOS ANGELES**

PROJECT SUMMARY:

SITE ADDRESS:

8332 HUNTINGTON DRIVE
SAN GABRIEL, CA 91775

PROPERTY OWNER:

ATIT WIRELESS SERVICES
12900 PARK PLAZA, 5TH FLOOR
CERRIOS, CA 91755
CONTACT: DAVE POLLARD
PHONE: (562) 468–6948

APPLICANT:

T–MOBILE WEST CORPORATION
3257 E. GUASTI RD., SUITE 200
ONTARIO, CA 91761
PHONE: (714) 850–2400
T–MOBILE REPRESENTATIVES:

ZONING MANAGER:	LINDA PAUL
CONSTRUCTION INSPECTOR:	T.B.D.
DEVELOPMENT MANAGER:	T.B.D.

PROJECT DESCRIPTION: LTE MODERNIZATION

THE PROJECT ENTAILS:

1. REPLACING SIX EXISTING ANTENNAS WITH SIX NEW AIR21 ANTENNAS.
2. REMOVE SIX EXISTING TMAS AND INSTALL THREE TWIN AWS TMAS
3. INSTALL ONE NEW HYBRID FIBER CABLES.
4. REMOVE ONE COAX PER SECTOR.
5. PAINT NEW ANTENNAS TO MATCH (E) TREE AND ADD PINE NEEDLE SOCKS.

BUILDING SUMMARY:

OCCUPANCY CLASSIFICATION:	U2
TYPE OF CONSTRUCTION:	V
ZONING:	–
TOTAL LEASE AREA:	N/A
ASSESSORS PARCEL NUMBER:	5376–021–001

SHEET INDEX:

SHEET NUMBER:	DESCRIPTION:
T–1	TITLE SHEET
T–2	ABBREVIATIONS, SYMBOLS, GENERAL NOTES & SPECIFICATIONS
A–1	SITE PLAN
A–2	ANTENNA LAYOUT
A–3	ARCHITECTURAL ELEVATIONS
A–4	EQUIPMENT DETAILS

VICINITY MAP:

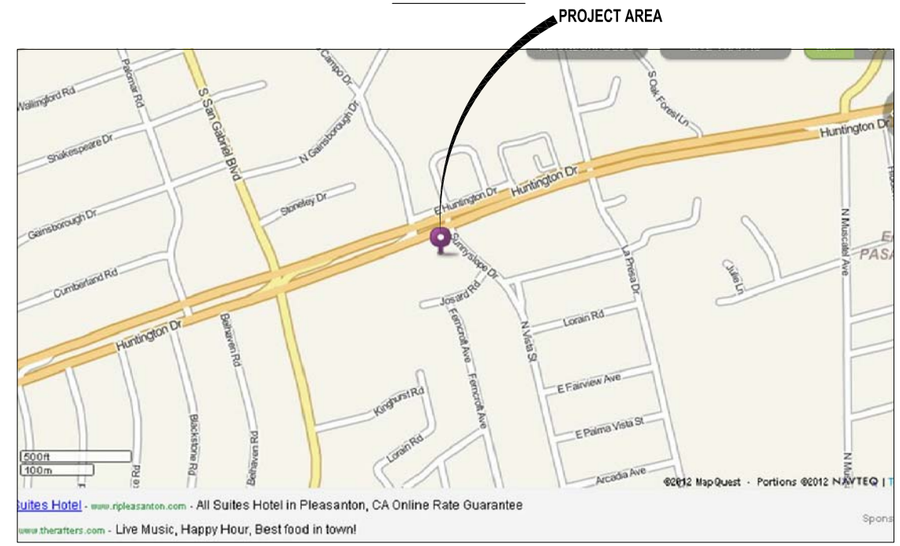

CONSULTING TEAM:

SAC/ZONING/PERMITTING:

CORE DEVELOPMENT SERVICES
2749 SATURN STREET
BREA, CA 92801
JULIA MALISOS
PHONE: (714) 512–4770
jmalisos@core.us.com

ARCHITECTURAL & ENGINEERING:

CDG–CONNELL DESIGN GROUP, L.L.C.
26455 RANCHO PKWY SOUTH
LAKE FOREST, CA 92630
CONTACT: DAN CONNELL
PHONE: (949) 306–4644
dconnell@connelldesigngroup.com

APPROVALS:

THE FOLLOWING PARTIES HEREBY APPROVE AND ACCEPT THESE DOCUMENTS AND AUTHORIZE THE CONTRACTOR TO PROCEED WITH THE CONSTRUCTION DESCRIBED HEREIN. ALL CONSTRUCTION DOCUMENTS ARE SUBJECT TO REVIEW BY THE LOCAL BUILDING DEPARTMENT AND ANY CHANGES AND MODIFICATIONS THEY MAY IMPOSE.

	PRINT NAME	SIGNATURE	DATE
LANDLORD			
DEVELOP. MGR			
CONST. MGR			
ZONING MGR			
RF ENGINEER			
OPERATIONS			
SAC REP.			
UTILITIES			

DIRECTIONS FROM T–MOBILE SANTA ANA OFFICE:

1. START OUT GOING NORTHWEST ON MCGAW AVE TOWARD ARMSTRONG AVE.. 0.5 MI
2. TAKE THE 3RD RIGHT ONTO RED HILL AVE. 0.8 MI
3. TAKE THE 3RD LEFT ONTO E DYER RD. 0.5 MI
4. MERGE ONTO CA–55 N TOWARD RIVERSIDE. 2.2 MI
5. MERGE ONTO I–5 N VIA EXIT 10B TOWARD SANTA ANA. 20.9 MI
6. MERGE ONTO I–605 N. 7.9 MI
7. MERGE ONTO CA–60 W TOWARD LOS ANGELES. 2.5 MI
8. TAKE THE ROSEMEAD BLVD/CA–19 EXIT, EXIT 10A 0.2 MI
9. KEEP RIGHT TO TAKE THE ROSEMEAD BLVD NORTH RAMP. 0.2
10. MERGE ONTO CA–19 N. 6.1 MI
11. TURN LEFT ONTO E HUNTINGTON DR. 1.0 MI
12. MAKE A U–TURN ONTO HUNTINGTON DR. 0.3 MI
13. 8332 HUNTINGTON DR IS ON THE RIGHT. 0.02 MI

APPLICABLE CODES

BUILDING CODE: CALIFORNIA BUILDING CODE 2010
ALL WORK IS TO COMPLY WITH THE 2010 CALIFORNIA BUILDING CODE (CBC)
TIA/EIA–222–1996–F LIFE SAFETY CODE NFPA–101, 607 COMMERCIAL BUILDING GROUNDING AND BONDING REQUIREMENTS FOR TELECOMMUNICATIONS
AISC – CONSTRUCTION MANUAL, 9TH EDITION OR LATER.
NEC (NATIONAL ELECTRIC CODE) 2007 (NFPA 70)

T · · Mobile ·
2008 McGAW AVENUE
IRVINE, CA 92614

PLANS PREPARED BY:
CDG
CONNELL DESIGN GROUP, LLC
CONSULTING CIVIL ENGINEERS
26455 Rancho Pkwy. South, Lake Forest CA 92630
(949) 753-8807 OFFICE - (949) 753-8833 FAX

CONSULTING GROUP:
core
DEVELOPMENT SERVICES
2749 Saturn Street
Brea, California 92821
(714)729-8404 (714)333-4441 fax
www.core.us.com

NO.	DATE:	DESCRIPTION:	BY:
0	07/08/12	90% CD	DMC
1	08/23/12	100% CD	EJN

SITE INFORMATION:

8332 HUNTINGTON

IE04177A

8332 HUNTINGTON DRIVE
SAN GABRIEL, CA 91775

SEAL:

SHEET TITLE:

TITLE SHEET

SHEET NUMBER:

T-1

ABBREVIATIONS

AB	ANCHOR BOLT
AC	ASPHALTIC CONCRETE
A/C	AIR CONDITIONING
ADJ	ADJUSTABLE
A.F.F.	ABOVE FINISH FLOOR
ARCH	ARCHITECTURAL
APPROX	APPROXIMATELY
A.G.L.	ABOVE GRADE LEVEL
A.M.S.L.	ABOVE MEAN SEA LEVEL
BD	BOARD
BLDG	BUILDING
BLKG	BLOCKING
BOT	BOTTOM
BSMT	BASEMENT
BTS	BASE TRANSCEIVER STATION
C	COURSE(S)
CEM	CEMENT
CL	CHAIN LINK
CLG	CEILING
CLR	CLEAR
COL	COLUMN
CONC	CONCRETE
CONST	CONSTRUCTION
CONT	CONTINUOUS
CORR	CORRIDOR
CO	CONDUIT ONLY
DIA	DIAMETER
DBL	DOUBLE
DEPT	DEPARTMENT
DEMO	DEMOLITION
DIM	DIMENSION
DN	DOWN
DR	DOOR
DTL	DETAIL
DWG	DRAWING
(E)	EXISTING
EA	EACH
ELEC	ELECTRIC
ELEV	ELEVATION
EQUIP	EQUIPMENT
EXP	EXPANSION
EXT	EXTERIOR
FA	FIRE ALARM
FB	FLAT BAR
FF	FINISH FLOOR
FH	FLAT HEAD
FIN	FINISH(ED)
FLR	FLOOR
FOS	FACE OF STUDS
FS	FINISH SURFACE
FT	FOOT, FEET
FTG	FOOTING
FW	FINISH WALL
F.G.	FINISH GRADE
FUT	FUTURE
GA	GAUGE
GALV	GALVANIZED
GL	GLASS
GR	GRADE
GYP	GYPSUM
GFCI	GROUND FAULT CIRCUIT INTERRUPT
GND	GROUND
HC	HOLLOW CORE
HDW	HARDWARE
HTR	HEATER
HM	HOLLOW METAL
HORIZ	HORIZONTAL
HR	HOUR
HT	HEIGHT
HV	HIGH VOLTAGE
ID	INSIDE DIMENSION
INS	INSULATION
INT	INTERIOR
JT	JOINT
LAM	LAMINATED
LBS	POUNDS
LT	LIGHT
LA	LIGHTNING ARRESTOR
LNA	LOW NOISE AMPLIFIER
MFR	MANUFACTURER
MAT	MATERIAL
MAX	MAXIMUM
MECH	MECHANICAL
MIN	MINIMUM
MISC	MISCELLANEOUS
ML	METAL LATH
MO	MASONRY OPENING
MS	MACHINE SCREW
MTD	MOUNTED
MTL	METAL
(N)	NEW
NIC	NOT IN CONTRACT
NO	NUMBER
NTS	NOT TO SCALE
OA	OVERALL
O.C.	ON CENTER
OPNG	OPENING
OPP	OPPOSITE
PARTN	PARTITION
PL	PLATE
PLAS	PLASTER
PLYWD	PLYWOOD
POC	POINT OF CONNECTION
PROP	PROPERTY
PT	PRESSURE TREATED
R	RISER
REQD	REQUIRED
RD	ROOF DRAIN
RM	ROOM
RMS	ROOMS
RO	ROUGH OPENING
SC	SOLID CORE
SCHED	SCHEDULE
SECT	SECTION
SHT	SHEET
SIM	SIMILAR
SPECS	SPECIFICATIONS
SS	STAINLESS STEEL
STL	STEEL
STOR	STORAGE
STRUCT	STRUCTURAL
SUSP	SUSPENDED
SW	SWITCH
SWBO	SWITCHBOARD
THK	THICK
TI	TENANT IMPROVEMENT
TMA	TOWER MOUNTED AMPLIFIER
TOS	TOP OF SURFACE
TS	TUBE STEEL
TYP	TYPICAL
UNO	UNLESS NOTED OTHERWISE
VCT	VINYL COMPOSITION TILE
VERT	VERTICAL
V.I.F.	VERIFY IN FIELD
VG	VERTICAL GRAIN
W/	WITH
WD	WOOD
WR	WATER RESISTANT
WT	WEIGHT
XFMR	TRANSFORMER
@	AT
[	CHANNEL
℄	CENTERLINE
∠	ANGLE
ℙ	PROPERTY LINE

SYMBOLS:

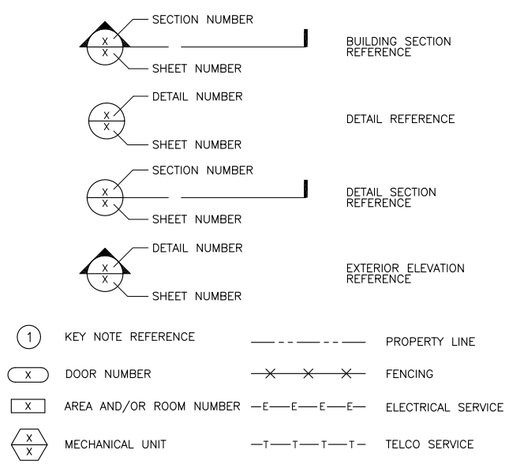

GENERAL

1. THESE NOTES SHALL BE CONSIDERED A PART OF THE WRITTEN SPECIFICATIONS.

2. THE CONTRACTOR SHALL NOTIFY ARCHITECT/ENGINEER OF ANY ERRORS, OMISSIONS, OR DISCREPANCIES AS THEY MAY BE DISCOVERED IN THE PLANS, SPECIFICATIONS, & NOTES PRIOR TO STARTING CONSTRUCTION. INCLUDING BUT NOT LIMITED BY DEMOLITION. THE CONTRACTOR SHALL BE RESPONSIBLE FOR CORRECTING ANY ERRORS, OMISSION, OR INCONSISTENCY AFTER THE START OF CONSTRUCTION WHICH HAS NOT BEEN BROUGHT TO THE ATTENTION OF THE ARCHITECT/ENGINEER AND SHALL INCUR ANY EXPENSES TO RECTIFY THE SITUATION. THE METHOD OF CORRECTION SHALL BE APPROVED BY THE ARCHITECT/ENGINEER.

3. PRIOR TO STARTING CONSTRUCTION THE CONTRACTOR HAS THE RESPONSIBILITY TO LOCATE ALL EXISTING UTILITIES, WHETHER OR NOT SHOWN ON THE PLANS, AND TO PROTECT THEM FROM DAMAGE. THE CONTRACTOR OR SUBCONTRACTOR SHALL BEAR THE EXPENSE OF REPAIRING OR REPLACING ANY DAMAGE TO THE UTILITIES CAUSED DURING THE EXECUTION OF THE WORK.

4. A COPY OF THE APPROVED PLANS SHALL BE KEPT IN A PLACE SPECIFIED BY THE GOVERNING AGENCY, AND BY LAW SHALL BE AVAILABLE FOR INSPECTION AT ALL TIMES. IT IS THE CONTRACTORS RESPONSIBILITY TO ENSURE ALL CONSTRUCTION SETS REFLECT THE SAME INFORMATION AS THE APPROVED PLANS. THE CONTRACTOR SHALL ALSO MAINTAIN ONE SET OF PLANS AT THE SITE FOR THE PURPOSE OF DOCUMENTING ALL AS–BUILT CHANGES, REVISIONS, ADDENDUM'S, OR CHANGE ORDERS. THE CONTRACTOR SHALL FORWARD THE AS–BUILT DRAWINGS TO THE ARCHITECT/ENGINEER AT THE CONCLUSION OF THE PROJECT.

5. THE CONTRACTOR SHALL BE RESPONSIBLE FOR THE COMPLETE SECURITY OF THE SITE FROM START OF PROJECT TO COMPLETION OF PROJECT.

6. THE CONTRACTOR IS RESPONSIBLE TO PROVIDE TEMPORARY POWER, WATER, AND TOILET FACILITIES.

7. ALL CONSTRUCTION THROUGH THE PROJECT SHALL CONFORM TO THE 2007 CBC AND ALL OTHER GOVERNING CODES.

8. THE CONTRACTOR SHALL BE RESPONSIBLE FOR COMPLYING WITH ALL SAFETY PRECAUTIONS AND REGULATIONS DURING THE WORK. THE ENGINEER WILL NOT ADVISE ON NOR PROVIDE DIRECTION AS TO SAFETY PRECAUTIONS AND PROGRAMS.

9. THE CONTRACTOR SHALL SUPERVISE AND COORDINATE ALL WORK, USING HIS PROFESSIONAL KNOWLEDGE AND SKILLS. HE IS SOLELY RESPONSIBLE FOR ALL CONSTRUCTION MEANS, METHODS, TECHNIQUES, PROCEDURES AND SEQUENCING AND COORDINATING ALL PORTIONS OF THE WORK.

10. THE CONTRACTOR SHALL BE RESPONSIBLE TO OBTAIN AND PAY FOR ALL PERMITS, LICENSES AND INSPECTIONS WITH RESPECT TO THE WORK TO COMPLETE THE PROJECT. BUILDING PERMIT APPLICATIONS SHALL BE FILED BY THE OWNER OR HIS REPRESENTATIVE. CONTRACTOR SHALL OBTAIN THE PERMIT AND MAKE FINAL PAYMENT OF SAID DOCUMENT.

11. ALL DIMENSIONS TAKE PRECEDENCE OVER SCALE UNLESS OTHERWISE NOTED.

12. THE CONTRACTOR SHALL PROVIDE ALL NECESSARY BLOCKING, BACKING, FRAMING, HANGERS OR SUPPORTS FOR INSTALLATION OF ITEMS INDICATED ON THE DRAWINGS.

13. THE CONTRACTOR SHALL PROVIDE THE FIRE MARSHALL APPROVED MATERIALS TO FILL/SEAL PENETRATIONS THROUGH FIRE RATED ASSEMBLIES.

14. NEW CONSTRUCTION ADDED TO EXISTING CONSTRUCTION SHALL BE MATCHED IN FORM, TEXTURE, MATERIAL AND PAINT COLOR EXCEPT AS NOTED IN THE PLANS.

15. WHERE SPECIFIED, MATERIALS TESTING SHALL BE TO THE LATEST STANDARDS AVAILABLE AS REQUIRED BY THE LOCAL GOVERNING AGENCY RESPONSIBLE FOR RECORDING THE RESULTS.

16. ALL GENERAL NOTES AND STANDARD DETAILS ARE THE MINIMUM REQUIREMENTS TO BE USED IN CONDITIONS WHICH ARE NOT SPECIFICALLY SHOWN OTHERWISE.

17. ALL DEBRIS AND REFUGE IS TO BE REMOVED FROM THE PROJECT DAILY. PREMISES SHALL BE LEFT IN A CLEAN BROOM FINISHED CONDITION AT ALL TIMES.

18. ALL SYMBOLS AND ABBREVIATIONS ARE CONSIDERED CONSTRUCTION INDUSTRY STANDARDS. IF A CONTRACTOR HAS A QUESTION REGARDING THEIR EXACT MEANING THE ARCHITECT/ENGINEER SHALL BE NOTIFIED FOR CLARIFICATIONS.

19. THE ENGINEER SHALL NOT BE RESPONSIBLE FOR THE METHODS, TECHNIQUES AND SEQUENCES OF PROCEDURES TO PERFORM THE WORK. THE SUPERVISION OF THE WORK IS THE SOLE RESPONSIBILITY OF THE CONTRACTOR.

20. CONTRACTORS SHALL VISIT THE SITE PRIOR TO BID TO ASCERTAIN CONDITIONS WHICH MAY ADVERSELY AFFECT THE WORK OR COST THEREOF.

21. THE CONTRACTOR SHALL FIELD VERIFY THE DIMENSION, ELEVATION, ETC. NECESSARY FOR THE PROPER CONSTRUCTION AND ALIGNMENT OF THE NEW PORTION OF THE WORK TO THE EXISTING WORK. THE CONTRACTOR SHALL MAKE ALL MEASUREMENTS NECESSARY FOR FABRICATION AND ERECTION OF STRUCTURAL MEMBERS. AND DISCREPANCY SHALL BE IMMEDIATELY BROUGHT TO THE ATTENTION OF THE ARCHITECT/ ENGINEER.

22. ALL EXISTING ACTIVE SEWER, WATER, GAS, ELECTRIC, AND OTHER UTILITIES WHERE ENCOUNTERED IN THE WORK, SHALL BE PROTECTED AT ALL TIMES, AND WHERE REQUIRED FOR THE PROPER EXECUTION OF THE WORK, SHALL BE RELOCATED AS DIRECTED BY ENGINEERS. EXTREME CAUTION SHOULD BE USED BY THE CONTRACTOR WHEN EXCAVATING OR PIER DRILLING AROUND OR NEAR UTILITIES.

23. ALL EXISTING INACTIVE SEWER, WATER, GAS, ELECTRIC AND OTHER UTILITIES, WHICH INTERFERE WITH THE EXECUTION OF THE WORK, SHALL BE REMOVED AND SHALL BE CAPPED, PLUGGED OR OTHERWISE DISCONTINUED AT POINTS WHICH WILL NOT INTERFERE WITH THE EXECUTION OF THE WORK, SUBJECT TO THE APPROVAL OF THE ENGINEER.

24. NO CHANGES ARE TO BE MADE TO THESE PLANS WITHOUT THE KNOWLEDGE AND WRITTEN CONSENT OF THE ARCHITECT/ ENGINEER. UNAUTHORIZED CHANGES RENDER THESE DRAWINGS VOID.

25. ANY REFERENCE TO THE WORDS APPROVED, OR APPROVAL IN THESE DOCUMENTS SHALL BE HERE DEFINED TO MEAN GENERAL ACCEPTANCE OR REVIEW AND SHALL NOT RELIEVE THE CONTRACTOR AND/OR HIS SUB–CONTRACTORS OF ANY LIABILITY IN FURNISHING THE REQUIRED MATERIALS OR LABOR SPECIFIED.

26. IT SHALL BE THE RESPONSIBILITY OF THE CONTRACTOR TO LOCATE ALL EXISTING UTILITIES WHETHER SHOWN HEREON OR NOT, AND TO PROTECT THEM FROM DAMAGE. THE CONTRACTOR SHALL BEAR ALL EXPENSE OF REPAIR OR REPLACEMENT IN CONJUNCTION WITH THE EXECUTION OF THIS WORK. 10. GENERAL CONTRACTOR SHALL NOTIFY THE ENGINEER AND ARCHITECT IMMEDIATELY OF ANY DISCREPANCIES FOUND WITHIN THE CONTRACT DOCUMENTS, PRIOR TO STARTING WORK.

SITE PREPARATION NOTES:

1. THE PREPARATION OF THE SITE FOR CONSTRUCTION SHALL INCLUDE THE REMOVAL OF ALL BROKEN CONCRETE, TREE TRUNKS AND ANY OTHER DEBRIS THAT WOULD BE DAMAGING TO THE FOOTINGS OF THE NEW STRUCTURE.

2. BACK FILLING AT TRENCHES SHALL BE OF CLEAN, STERILE SOIL HAVING A SAND EQUIVALENT OF 30 OR GREATER. BACK FILLING SHALL BE DONE IN 8 INCH LAYERS, MOISTURE CONDITIONED AND PROPERLY COMPACTED. ADEQUATE DRAINAGE SHALL BE PROVIDED SUCH THAT NO PONDING OCCURS.

3. ALL FOUNDATION FOOTINGS SHALL EXTEND INTO AND BEAR AGAINST NATURAL UNDISTURBED SOIL OR APPROVED COMPACTED FILL. FOOTINGS SHALL EXTEND INTO SOIL DEPTH AS INDICATED IN PLANS.

4. SHOULD ANY LOOSE FILL, EXPANSIVE SOIL, GROUND WATER OR ANY OTHER UNEXPECTED CONDITIONS BE ENCOUNTERED DURING THE EXCAVATION FOR THE NEW FOUNDATION, THE ARCHITECT/ENGINEER SHALL BE NOTIFIED AND ALL FOUNDATION WORK SHALL CEASE IMMEDIATELY.

5. WITHIN AN AREA A MINIMUM OF 5 FEET BEYOND THE BUILDING LIMITS, EXCAVATE A MINIMUM OF 4" OF EXISTING SOIL. REMOVE ALL ORGANICS, PAVEMENT, ROOTS, DEBRIS AND OTHERWISE UNSUITABLE MATERIAL.

6. THE SURFACE OF THE EXPOSED SUBGRADE SHALL BE INSPECTED BY PROBING OR TESTING TO CHECK FOR POCKETS OF SOFT OR UNSUITABLE MATERIAL. EXCAVATE UNSUITABLE SOIL AS DIRECTED BY THE GEOTECHNICAL ENGINEER/TESTING AGENCY.

7. PROOFROLL THE SURFACE OF THE EXPOSED SUBGRADE WITH A LOADED TANDEM AXLE DUMP TRUCK. REMOVE ALL SOILS WHICH PUMP OR DO NOT COMPACT PROPERLY AS DIRECTED BY THE GEOTECHNICAL ENGINEER/TESTING AGENCY.

8. FILL ALL EXCAVATED AREAS WITH APPROVED CONTROLLED FILL. PLACE IN 8" LOOSE LIFTS AND THE MAXIMUM DRY DENSITY IN ACCORDANCE WITH ASTM D–698. COMPACT TO A MINIMUM OF 90% RELATIVE COMPACTION

9. THE STRUCTURAL DRAWINGS HERE IN REPRESENT THE FINISHED STRUCTURE. THE CONTRACTOR SHALL PROVIDE ALL TEMPORARY GUYING AND BRACING REQUIRED TO ERECT AND HOLD THE STRUCTURE IN PROPER ALIGNMENT UNTIL ALL STRUCTURAL WORK AND CONNECTIONS HAVE BEEN COMPLETED. THE INVESTIGATION, DESIGN, SAFETY, ADEQUACY AND INSPECTION OF ERECTION BRACING, SHORING, TEMPORARY SUPPORTS, ETC. IS THE SOLE RESPONSIBILITY OF THE CONTRACTOR.

10. PRIOR TO STARTING CONSTRUCTION, THE CONTRACTOR SHALL PROTECT ALL AREAS FROM DAMAGE WHICH MAY OCCUR DURING CONSTRUCTION. ANY DAMAGE TO NEW OR EXISTING SURFACES, STRUCTURES OR EQUIPMENT SHALL BE IMMEDIATELY REPAIRED OR REPLACED TO THE SATISFACTION OF THE PROPERTY OWNER. THE CONTRACTOR SHALL BEAR THE EXPENSE OF REPAIRING OR REPLACING ANY DAMAGED AREAS.

11. WHEN REQUIRED STORAGE OF MATERIALS OCCURS, THEY SHALL BE EVENLY DISTRIBUTED OVER THE FLOOR OR ROOF SO AS NOT TO EXCEED THE DESIGNED LIVE LOADS FOR THE STRUCTURE. TEMPORARY SHORING OR BRACING SHALL BE PROVIDED WHERE THE STRUCTURE OR SOIL HAS NOT ATTAINED THE DESIGN STRENGTH FOR THE CONDITIONS PRESENT.

12. BEFORE PROCEEDING WITH ANY WORK WITHIN THE EXISTING FACILITY, THE CONTRACTOR SHALL FAMILIARIZE HIMSELF WITH EXISTING STRUCTURAL AND OTHER CONDITIONS. IT SHALL BE THE CONTRACTOR'S RESPONSIBILITY TO PROVIDE ALL NECESSARY BRACING, SHORING AND OTHER SAFEGUARDS TO MAINTAIN ALL PARTS OF THE EXISTING WORK IN A SAFE CONDITION DURING THE PROCESS OF DEMOLITION AND CONSTRUCTION AND TO PROTECT FROM DAMAGE THOSE PORTIONS OF THE EXISTING WORK WHICH ARE TO REMAIN.

SUBMITTALS:

SUBMITTALS: SUBMITTALS FOR SHOP DRAWINGS, MILL TESTS, PRODUCT DATA, ECT. FOR ITEMS DESIGNED BY THE ARCHITECT/ ENGINEER OF RECORD SHALL BE MADE TO THE ARCHITECT/ENGINEER PRIOR TO CONSTRUCTION. THE CONTRACTOR SHALL REVIEW THE SUBMITTAL BEFORE FORWARDING TO THE ARCHITECT. SUBMITTALS SHALL BE MADE IN ADVANCED TO ARCHITECT–ENGINEER. SUBMITTALS REQUIRED FOR EACH SECTION OF THESE NOTES ARE SPECIFIED IN THAT SECTION.

SHOP DRAWING REVIEW:

REVIEW BY THE ARCHITECT/ENGINEER IS FOR GENERAL COMPLIANCE WITH THE DESIGN CONCEPT AND THE CONTRACT DOCUMENTS. MARKINGS OR COMMENTS SHALL NOT BE CONSTRUED AS RELIEVING THE CONTRACTOR FROM COMPLIANCE WITH THE PROJECT PLANS AND SPECIFICATIONS, NOR DEPARTURES THRERFROM. THE CONTRACTOR REMAINS RESPONSIBLE FOR DETAILS AND ACCURACY, FOR CONFIRMING AND CORRELATING ALL QUANTITIES AND DIMENSIONS, FOR SELECTION FABRICATION PROCESSES.

ACCESSIBILITY NOTE:

THE TELECOMMUNICATIONS EQUIPMENT SPACE SHOWN HEREON THESE PLANS IS NOT CUSTOMARILY OCCUPIED. WORK TO BE PERFORMED IN THIS FACILITY CANNOT REASONABLY BE PERFORMED BY PERSONS WITH A SEVERE IMPAIRMENT: MOBILITY, SIGHT, AND/OR HEARING. THEREFORE, PER 2010 CALIFORNIA BUILDING CODE SECTION 1103B.1 EXCEPTION 1, THIS FACILITY SHALL BE EXEMPTED FROM ALL TITLE 24 ACCESS REQUIREMENTS.

BID WALK NOTES:

1. CONTRACTOR TO FIELD VERIFY ALL EXISTING CONSTRUCTION CONDITIONS BEFORE SUBMITTAL OF FINAL BIDS, START OF CONSTRUCTION AND/OR FABRICATION. AFTER THOROUGHLY EXAMINING THE PLANS AND EXISTING SITE CONDITIONS NOTIFY THE ENGINEER IN WRITING OF ANY OMISIONS/DISCREPANCIES, OR ANY ITEMS NEEDING CLARIFICATION PRIOR TO SUBMITTING FINAL BIDS.

2. IF THE ENGINEER IS NOT NOTIFIED OF ANY OMISIONS/DISCREPANCIES OR CLARIFICATIONS IN WRITING AS DESCRIBED IN #1 IT WILL BE CONFIRMED THAT THE CONTRACTOR HAS CONSIDERED ALL ITEMS THAT WILL AFFECT THE COST OF THE CONSTRUCTION OF THE SITE UNDER THE MOST STRINGENT CONDITIONS. THE CONTRACTOR WILL NOT BE ENTITLED TO ANY ADDITIONAL COMPENSATION AFTER FINAL BIDS HAVE BEEN SUBMITTED AND AWARDED FROM CARRIER.

T·Mobile·

2008 McGAW AVENUE
IRVINE, CA 92614

PLANS PREPARED BY:

CDG
CONNELL DESIGN GROUP, LLC
CONSULTING CIVIL ENGINEERS
26455 Rancho Pkwy. South, Lake Forest CA 92630
(949) 753-8807 OFFICE - (949) 753-8833 FAX

CONSULTING GROUP:

core
DEVELOPMENT SERVICES
2749 Saturn Street
Brea, California 92821
(714)729-8404 (714)333-4441 fax
www.core.us.com

NO.	DATE:	DESCRIPTION:	BY:
0	07/08/12	90% CD	DMC
1	08/23/12	100% CD	EJN

SITE INFORMATION:

8332 HUNTINGTON

IE04177A

8332 HUNTINGTON DRIVE
SAN GABRIEL, CA 91775

SEAL:

SHEET TITLE:

ABBREVIATIONS, SYMBOLS, GENERAL NOTES & SPECIFICATIONS

SHEET NUMBER:

T-2

NOTE:
SITE PLAN IS PRELIMINARY AND DONE WITHOUT THE BENEFIT OF A SURVEY.

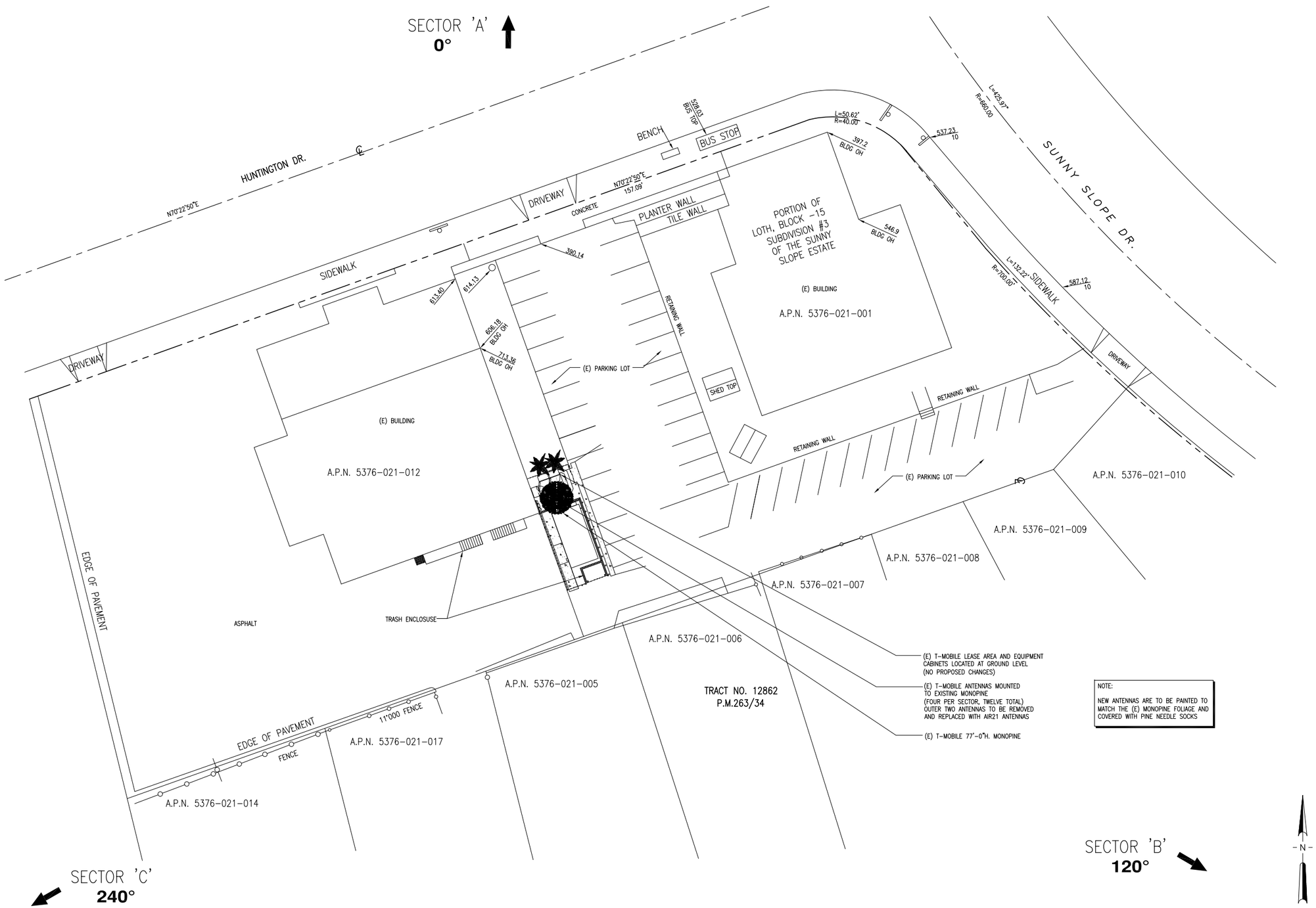

NOTE:
NEW ANTENNAS ARE TO BE PAINTED TO MATCH THE (E) MONOPINE FOLIAGE AND COVERED WITH PINE NEEDLE SOCKS

SITE PLAN

SCALE: 1"=20'-0" 0 10' 20'

1

T-Mobile
2008 McGAW AVENUE
IRVINE, CA 92614

PLANS PREPARED BY:

CDG
CONNELL DESIGN GROUP, LLC
CONSULTING CIVIL ENGINEERS
26455 Rancho Pkwy. South, Lake Forest CA 92630
(949) 753-8807 OFFICE - (949) 753-8833 FAX

CONSULTING GROUP:

core
DEVELOPMENT SERVICES
2749 Saturn Street
Brea, California 92821
(714)729-8404 (714)333-4441 fax
www.core.us.com

NO.	DATE:	DESCRIPTION:	BY:
0	07/08/12	90% CD	DMC
1	08/23/12	100% CD	EJN

SITE INFORMATION:

8332 HUNTINGTON

IE04177A

8332 HUNTINGTON DRIVE
SAN GABRIEL, CA 91775

SEAL:

SHEET TITLE:

SITE PLAN

SHEET NUMBER:

A-1

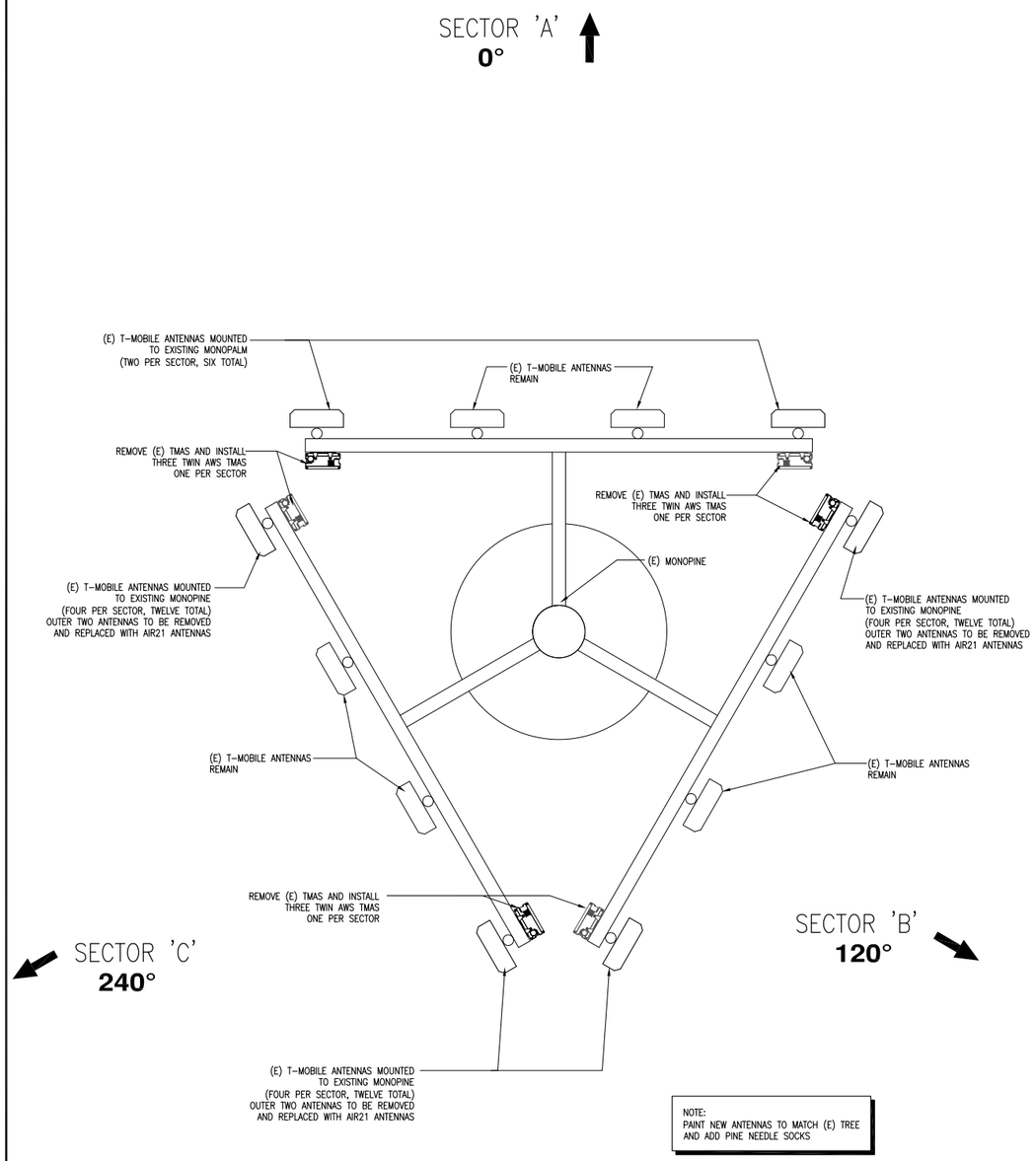

EXISTING ANTENNA PLAN

SCALE: 3/4"=1'-0" 0 8" 16"

1

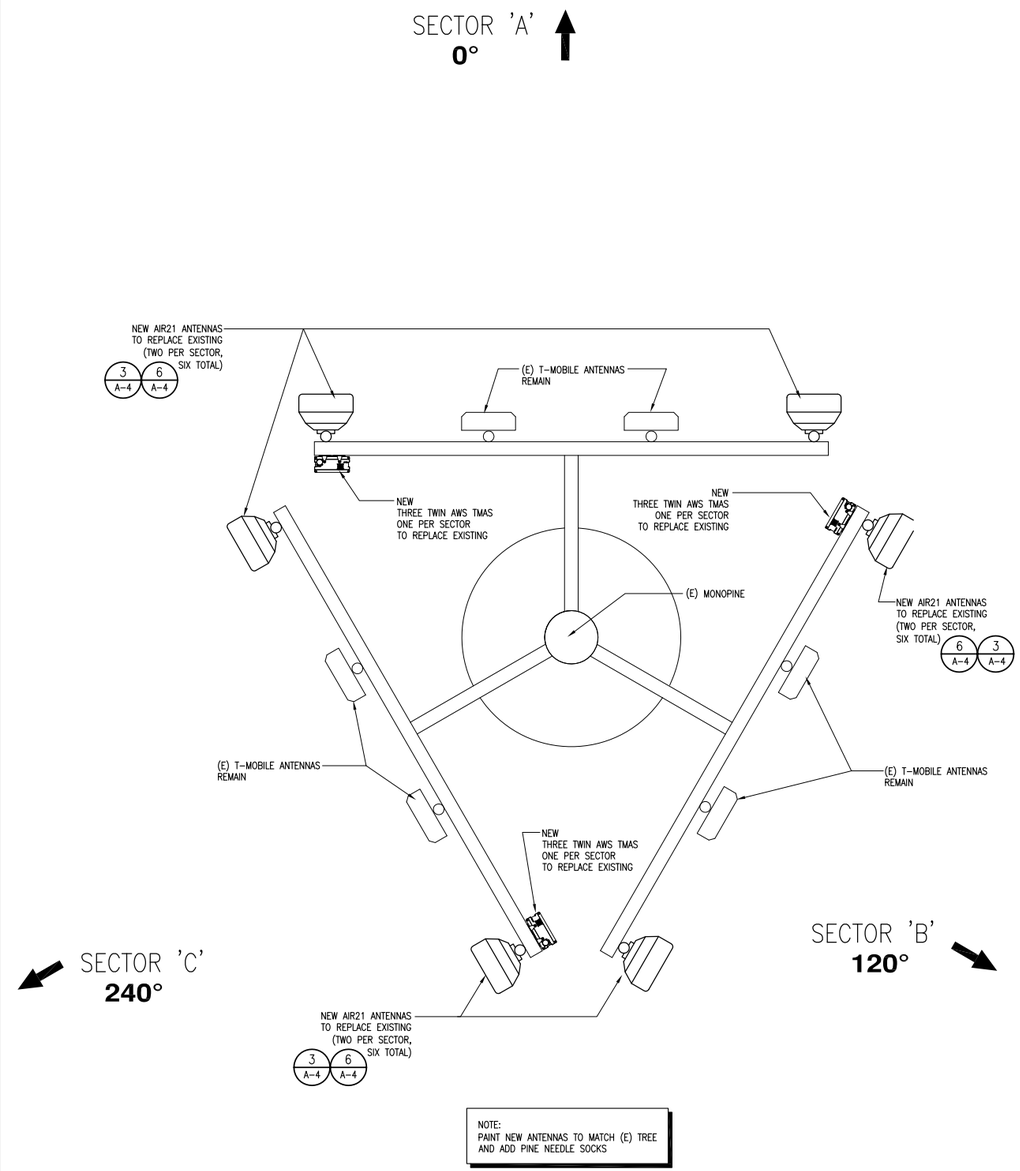

PROPOSED ANTENNA PLAN

SCALE: 3/4"=1'-0" 0 8" 16"

2

T-Mobile

2008 McGAW AVENUE
IRVINE, CA 92614

PLANS PREPARED BY:

CONNELL DESIGN GROUP, LLC
CONSULTING CIVIL ENGINEERS
26455 Rancho Pkwy. South, Lake Forest CA 92630
(949) 753-8807 OFFICE - (949) 753-8833 FAX

CONSULTING GROUP:

core
DEVELOPMENT SERVICES
2749 Saturn Street
Brea, California 92821
(714)729-8404 (714)333-4441 fax
www.core.us.com

NO.	DATE:	DESCRIPTION:	BY:
0	07/08/12	90% CD	DMC
1	08/23/12	100% CD	EJN

SITE INFORMATION:

8332 HUNTINGTON

IE04177A

8332 HUNTINGTON DRIVE
SAN GABRIEL, CA 91775

SEAL:

SHEET TITLE:

ANTENNA LAYOUT

SHEET NUMBER:

A-2

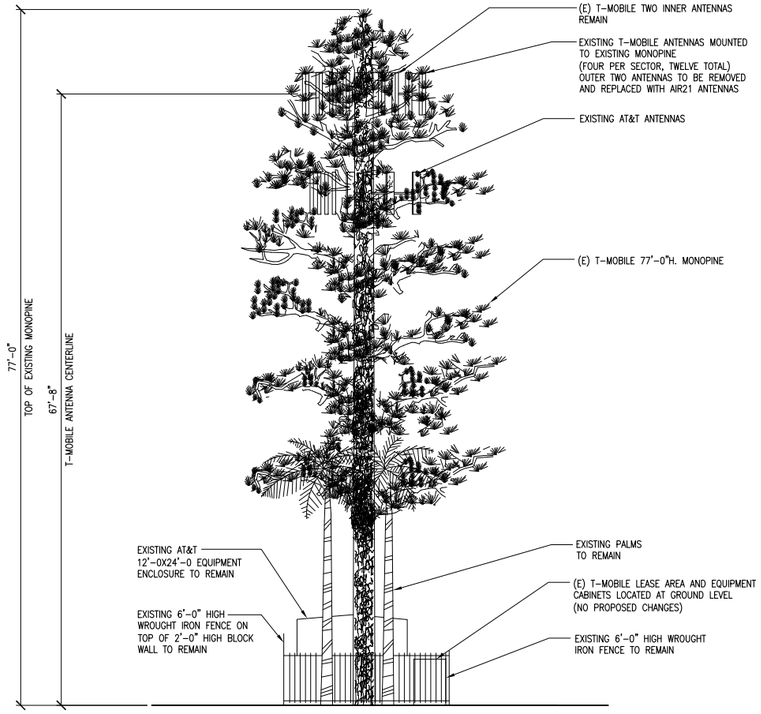

NOTE:
PAINT NEW ANTENNAS TO MATCH (E) TREE AND ADD PINE NEEDLE SOCKS

NORTH ELEVATION

SCALE: 1/8"=1'-0" 0 4' 8'

1

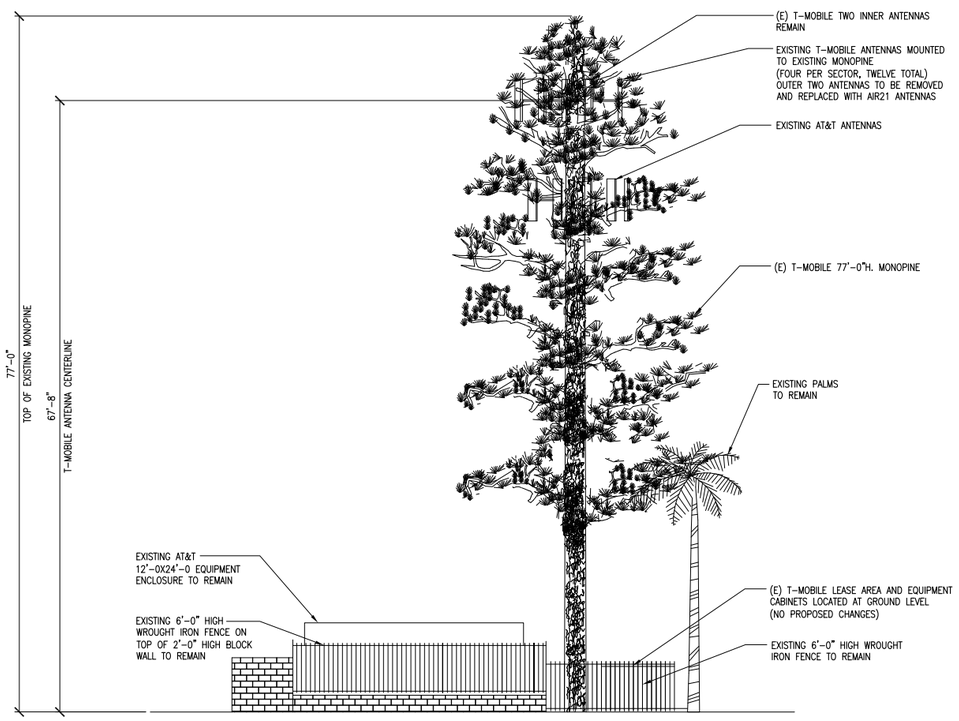

NOTE:
PAINT NEW ANTENNAS TO MATCH (E) TREE AND ADD PINE NEEDLE SOCKS

EAST ELEVATION

SCALE: 1/8"=1'-0" 0 4' 8'

2

T-Mobile

2008 McGAW AVENUE
IRVINE, CA 92614

PLANS PREPARED BY:

CONNELL DESIGN GROUP, LLC
CONSULTING CIVIL ENGINEERS
26455 Rancho Pkwy. South, Lake Forest CA 92630
(949) 753-8807 OFFICE - (949) 753-8833 FAX

CONSULTING GROUP:

core
DEVELOPMENT SERVICES
2749 Saturn Street
Brea, California 92821
(714)729-8404 (714)333-4441 fax
www.core.us.com

NO.	DATE:	DESCRIPTION:	BY:
0	07/08/12	90% CD	DMC
1	08/23/12	100% CD	EJN

SITE INFORMATION:

8332 HUNTINGTON

IE04177A

8332 HUNTINGTON DRIVE
SAN GABRIEL, CA 91775

SEAL:

SHEET TITLE:

ARCHITECTURAL ELEVATIONS

SHEET NUMBER:

A-3

AIR 21 ANTENNA DATA:
PHYSICAL CHARACTERISTICS AND ENVIRONMENT:
DIMENSIONS (H X W X D): 1422 X 307 X 200 MM
(56" X 12" X 7.9")

WEIGHT: 41.5 KG (91 LBS).
TWO MOUNTING BRACKETS – ADD'L 2.1 KG (5 LBS).

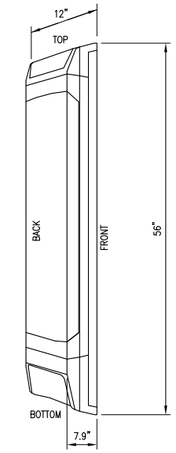

ISOMETRIC VIEW

NOT USED | SCALE: N.T.S. | 1

NOT USED | SCALE: N.T.S. | 2

AIR 21 ANTENNA DETAIL | SCALE: N.T.S. | 3

NOT USED | SCALE: N.T.S. | 4

NOT USED | SCALE: N.T.S. | 5

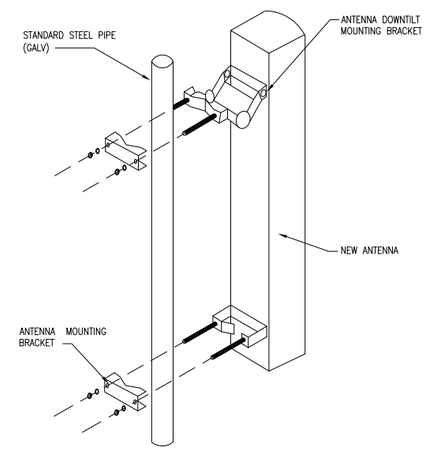

ANTENNA PIPE MOUNT | SCALE: N.T.S. | 6

NOT USED | SCALE: N.T.S. | 7

NOT USED | SCALE: N.T.S. | 8

ERICSSON KRY 112 144/1
DIMENSIONS, MM (IN) . . . . . .190 X 195 X 86 (7.5" X 7.7" X 3.4")
WEIGHT, KG (LB). . . . . 5 KG (11 LBS)
FINISH . . . . . .GRAY PAINT

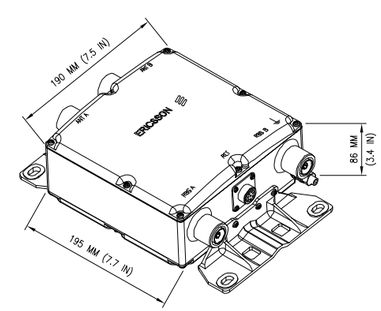

TWIN AWS TMA DETAIL | SCALE: N.T.S. | 9

T · · Mobile · ·

2008 McGAW AVENUE
IRVINE, CA 92614

PLANS PREPARED BY:

CONNELL DESIGN GROUP, LLC
CONSULTING CIVIL ENGINEERS
26455 Rancho Pkwy. South, Lake Forest CA 92630
(949) 753-8807 OFFICE - (949) 753-8833 FAX

CONSULTING GROUP:

core
DEVELOPMENT SERVICES
2749 Saturn Street
Brea, California 92821
(714)729-8404 (714)333-4441 fax
www.core.us.com

NO.	DATE:	DESCRIPTION:	BY:
0	07/08/12	90% CD	DMC
1	08/23/12	100% CD	EJN

SITE INFORMATION:

8332 HUNTINGTON

IE04177A

8332 HUNTINGTON DRIVE
SAN GABRIEL, CA 91775

SEAL:

SHEET TITLE:

EQUIPMENT DETAILS

SHEET NUMBER:

A-4