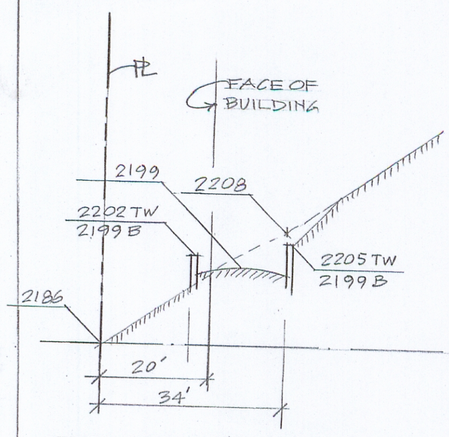

SECTION D-D

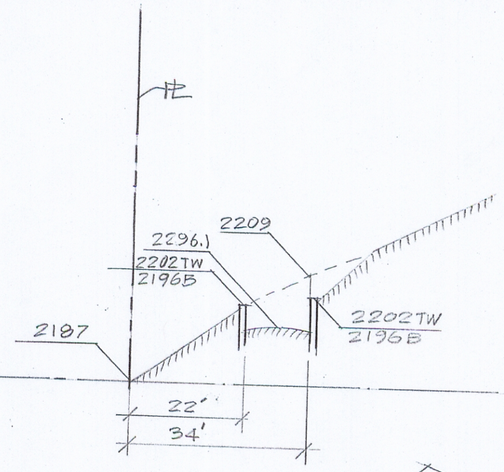

E-E

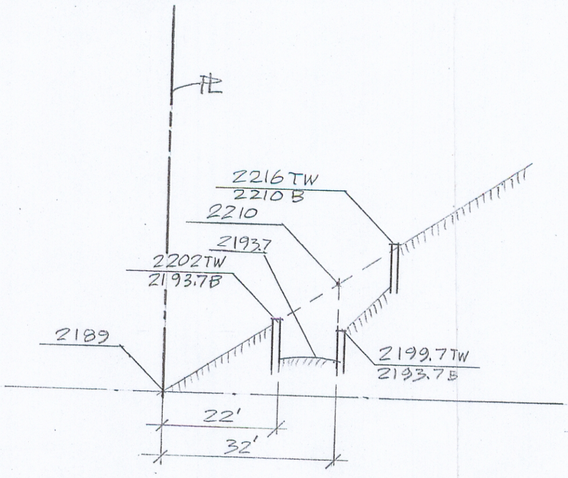

F-F

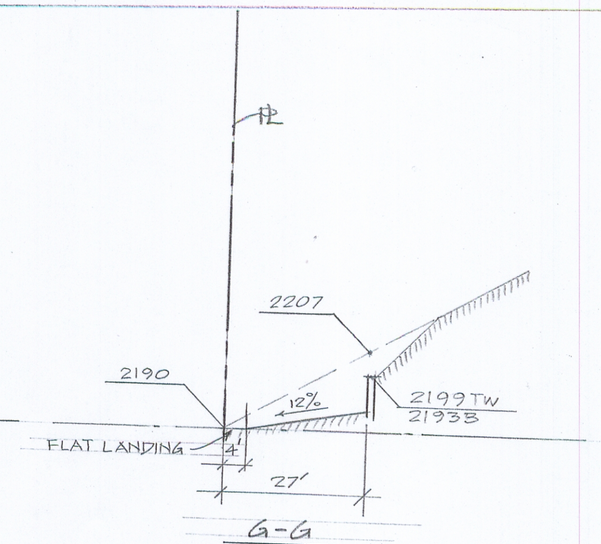

G-G

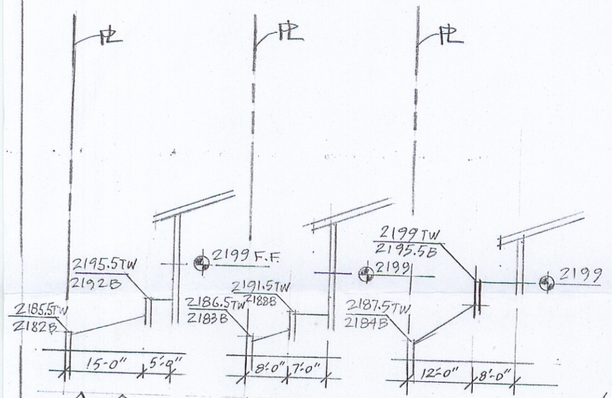

A-A B-B C-C

ALL SECTIONS 1" = 20'

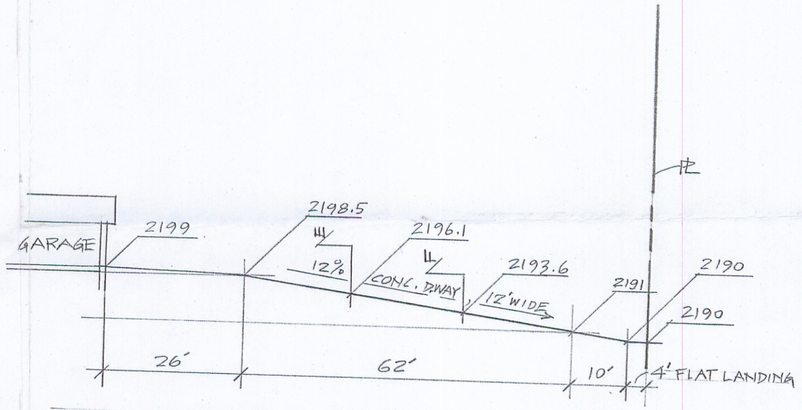

LONGITUDINAL DRIVEWAY SECTION

SCALE 1" = 20'

0' 5 10 15 20 25 30 35 40 45 50'

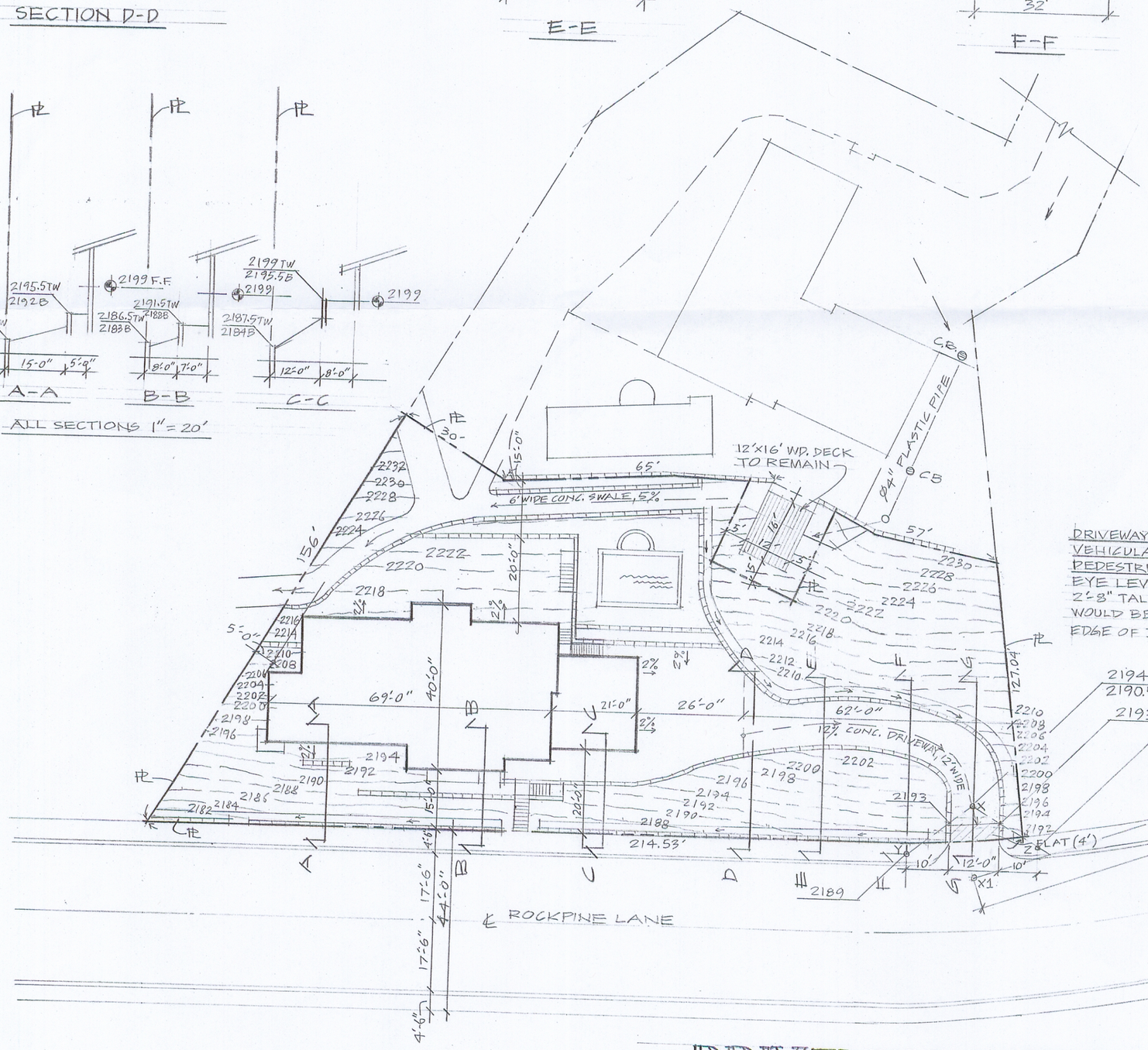

DRIVEWAY VISIBILITY CONCERNS

VEHICULAR: FROM POINT X1 TO POINT X2 = 150' OF UNOBSTRUCTED VISION.

PEDESTRIAN: FROM POINT X LOCATED AT DRIVEWAY ℄, 8' BEYOND ℄, AT EYE LEVEL 3'-6" OFF THE PAVEMENT (2194) TO POINT "Y" (2189) A CHILD 2'-8" TALL WOULD BE VISIBLE, AND TO POINT "Z" A CHILD 1'-8" TALL WOULD BE VISIBLE. IN BOTH CASES LINE OF SIGHT CROSSES THE EDGE OF DRIVEWAY AT 2193, AND THIS WAS TAKEN INTO CONSIDERATION.

LICENSED ARCHITECT
ALEX ROGIC
No. C 10555
REN. 03/11
STATE OF CALIFORNIA

Alex Rogic

OWNER/APPLICANT/ARCHITECT
ALEX ROGIC
DATE = 03/20/2009

DRIVEWAY EXHIBIT

SCALE 1" = 20'

N

PM 063010