RECEIVED
DEPT OF REGIONAL PLANNING
PM068736 EXHIBIT
DATE: 05-13-14

EXHIBIT "A"
MINOR LAND DIVISION
VESTING TENTATIVE PARCEL MAP NO. 68736

LOCATED IN THE UNINCORPORATED TERRITORY OF THE COUNTY OF LOS ANGELES, STATE OF CALIFORNIA

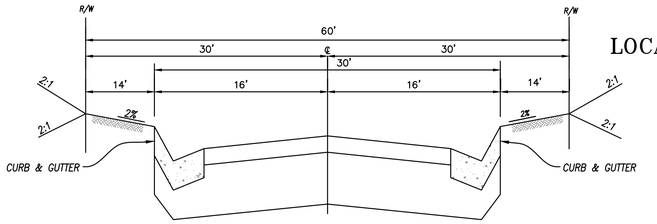

EXISTING SOURDOUGH ROAD
PER TRACT NO. 43748
EXISTING IMPROVEMENTS
NOT TO SCALE

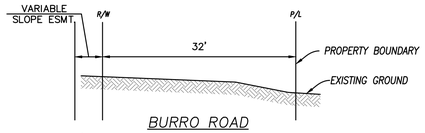

BURRO ROAD
(PRIVATE AND FUTURE STREET)
NO IMPROVEMENTS PROPOSED
NOT TO SCALE

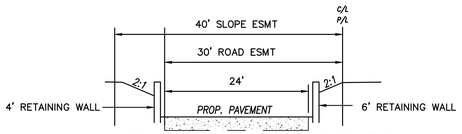

SOURDOUGH ROAD ACCESS EASEMENT
(PRIVATE AND FUTURE STREET)
PER INSTRUMENT NO. 05-1298057
NOT TO SCALE

LINE DATA		
LINE	DIRECTION	LENGTH
L1	N81°33'02"E	68.08'
L2	N63°15'50"E	75.23'

CURVE DATA				
CURVE	DELTA	LENGTH	RADIUS	TANGENT
C1	8°45'06"	106.92'	699.99'	53.56'
C2	2°25'20"	27.90'	660.00'	13.95'
C3	26°44'11"	46.66'	100.00'	23.76'

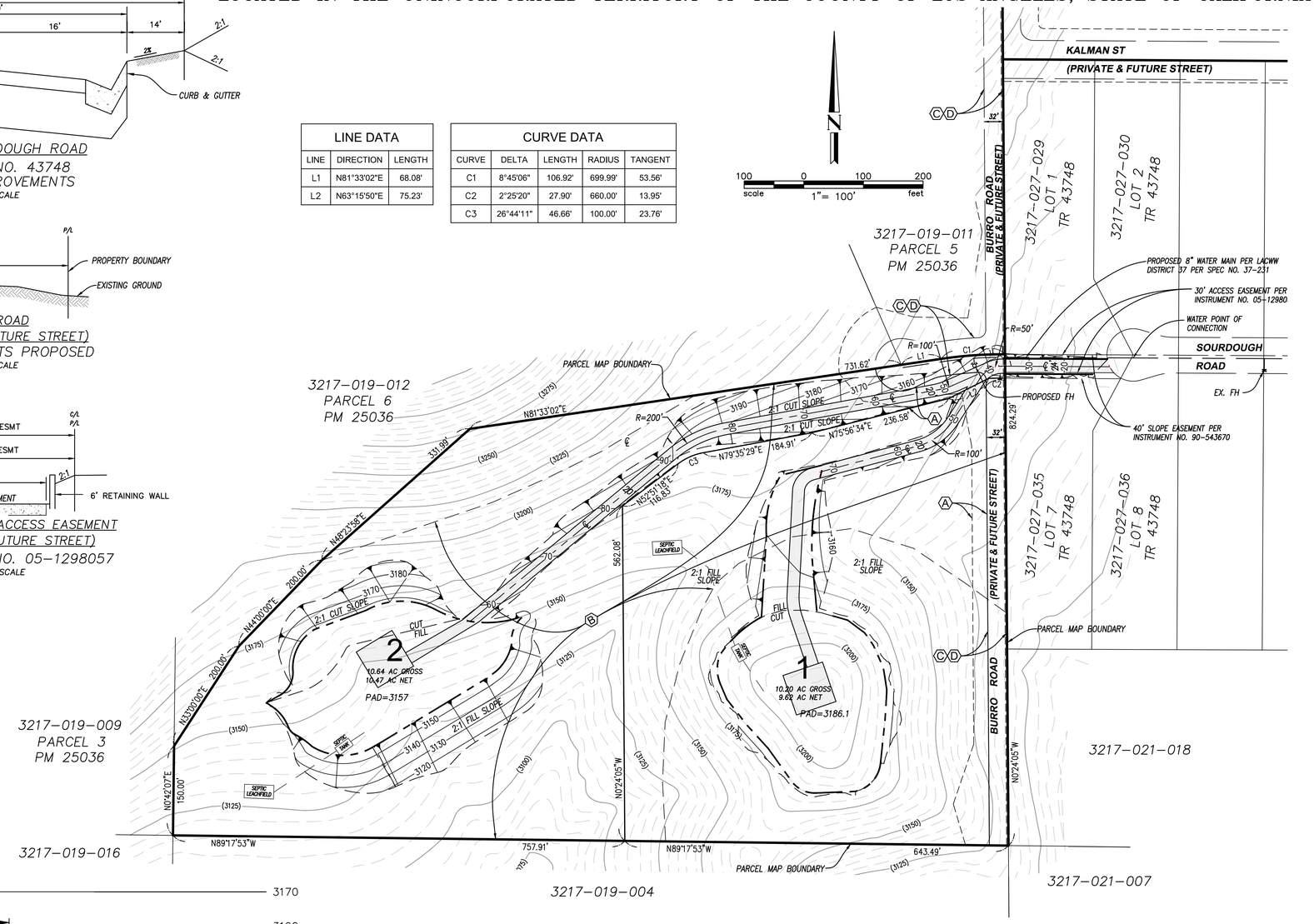

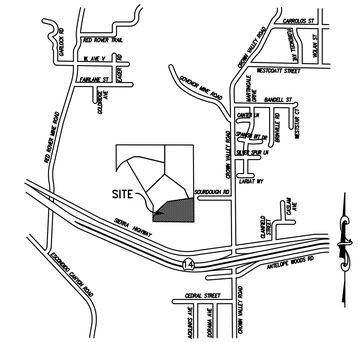

VICINITY MAP
N.T.S.

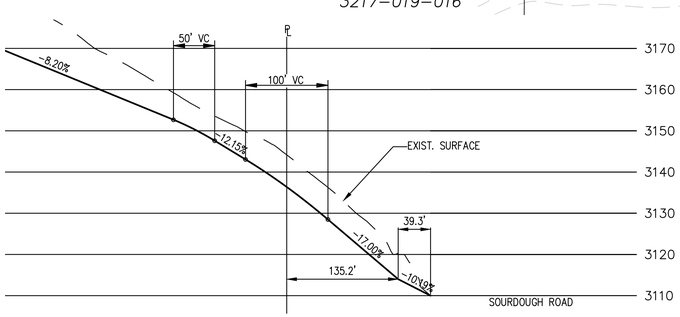

SOURDOUGH ROAD ACCESS PROFILE
NOT TO SCALE

LEGAL DESCRIPTION

PARCEL 7 OF PARCEL MAP 25036, IN THE UNINCORPORATED TERRITORY OF THE COUNTY OF LOS ANGELES, STATE OF CALIFORNIA, AS SHOWN ON MAP RECORDED IN BOOK 281, PAGES 94 THROUGH 97, INCLUSIVE, OF MAPS, IN THE OFFICE OF THE COUNTY RECORDER OF SAID COUNTY.

OWNER:

ALAN & JEANETTE LASLOVICH
3051 CLAYVALE ROAD
ACTON, CA 93510

LOT TABULATION

LOT NO.	GROSS AREA	NET AREA
1	10.20 AC.	9.62 AC.
2	10.64 AC.	10.47 AC.
TOTAL	20.84 AC.	20.09 AC.

EASEMENT NOTES:

THE FOLLOWING EASEMENTS CORRESPOND TO THE TITLE POLICY #02 067 44727 PREPARED BY TRICOR TITLE COMPANY OF CALIFORNIA DATED JUNE 3, 2005

(A) VARIABLE WIDTH SLOPE EASEMENT OF THE COUNTY OF LOS ANGELES PER PARCEL MAP NO. 25036 RECORDED IN PMB 281, PAGES 94-97, INCLUSIVE OF PARCEL MAP, TO REMAIN.

(B) RESTRICTED USE AREA PER PARCEL MAP NO. 25036 RECORDED IN PMB 281, PAGES 94-97, INCLUSIVE OF PARCEL MAP, TO BE VACATED PRIOR TO FINAL MAP RECORDATION.

(C) SOURDOUGH ROAD & BURRO ROAD PRIVATE & FUTURE STREETS PER PARCEL MAP NO. 25036 RECORDED IN PMB 281, PAGES 94-97, INCLUSIVE OF PARCEL MAP, TO REMAIN.

(D) NONEXCLUSIVE EASEMENT TO THE GENERAL PUBLIC FOR INGRESS & EGRESS & ROAD PURPOSES IN THE REAL PROPERTY HEREIN OFFERED AS "PRIVATE & FUTURE STREET" PER PARCEL MAP NO. 25036 RECORDED IN PMB 281, PAGES 94-97, INCLUSIVE OF PARCEL MAP, TO REMAIN.

UTILITIES

WATER: LOS ANGELES COUNTY WATERWORKS DISTRICT NO. 37
SEWER: PRIVATE SEWAGE DISPOSAL (SEPTIC)
ELECTRIC: SOUTHERN CALIFORNIA EDISON
CABLE: TIME WARNER
TELEPHONE: VERIZON
GAS: SOUTHERN CALIFORNIA GAS COMPANY

NOTES

1. SIZE OF SITE: 20.84 ACRES
2. EXISTING ZONING: A-1-1
3. EXISTING LAND USE: N1 (1du/2ac)(0.5ac/du)
4. PROPOSED LAND USE: 2 LOTS (1du/6.95ac)(0.14ac/du)
5. NO OAK TREES ON SITE
6. NO WELLS ON SITE
7. APN 3217-019-013
8. NO EXISTING STRUCTURES
9. NO DEFINED WATER COURSES
10. NO EXISTING SEWAGE DISPOSAL SITES
11. A POTABLE WATER SUPPLY HAS NOT BEEN PROVEN TO BE AVAILABLE FOR THE PROPOSED PARCEL AT THIS TIME.

LEGEND

DENOTES POTENTIAL BUILDING PAD AREA
DENOTES PAVEMENT / IMPERVIOUS AREA

EARTHWORK QUANTITIES

	CUT	FILL
RAW QUANTITIES:	46,500 CY	46,500 CY

NO.	DESCRIPTION	DATE	BY

REVISONS

SUBDIVIDER / APPLICANT:

ALAN & JEANETTE LASLOVICH
3051 CLAYVALE ROAD
ACTON, CA 93510

REGISTERED PROFESSIONAL ENGINEER
DEAN A. PARADISE
No. C39830
CIVIL
STATE OF CALIFORNIA

Hall & Foreman, Inc.
Engineering • Planning • Surveying
14297 CAJON ST, SUITE 101 • VICTORVILLE, CA 92392 • 760-524-9100
PREPARED UNDER THE SUPERVISION OF:
DEAN A. PARADISE R.C.E. NO.C39830 DATE:

IN THE COUNTY OF LOS ANGELES

DRAWN BY: SMS
DESIGNED BY: SMS
CHECKED BY: DP

VESTING TENTATIVE
PARCEL MAP No.68736

SCALE: AS SHOWN
DATE: 05/13/14
SHT NO.: 01 OF 01

Drawing Name: V:\14001\Planning\Tentative Map\01_PM 68736_Exhibit A.dwg
Last Opened: May 08, 2014 - 10:55am by: SSchubert