COMMERCIAL BUILDING

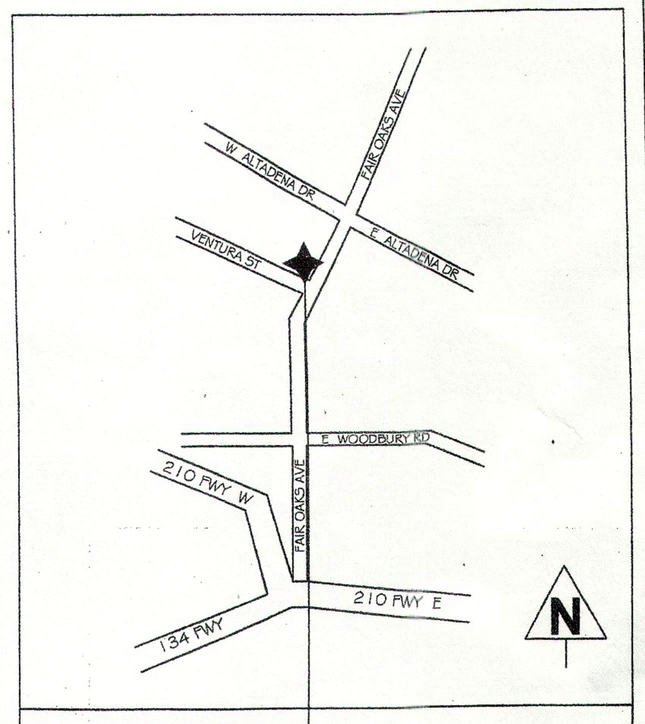

VICINITY MAP / SITE LOCATION

BUILDING DATA

OWNER:	KING RANCH MARKETS ANER IGLESIAS (626) 755-9066
PROJECT ADDRESS:	2515 FAIR OAKS AV, ALTADENA, 91001
BUILDING AREA:	13,100.00 SQ. FT.
AREA OF IMPROVEMENT:	970.00 SQ. FT APROX.
CEILINGS HT.:	16' FT. HIGH

SHEET INDEX

SHEET NUMBER	SHEET TITLE
A-1	SITE PLAN, EQUIPMENT AND FINISH SCHEDULE
A-2	FLOOR PLAN
A-2.1	2ND LEVEL FLOOR PLAN
H-1	EXISTING HOOD PLAN (RELOCATED)
H-2	NEW HOOD PLAN

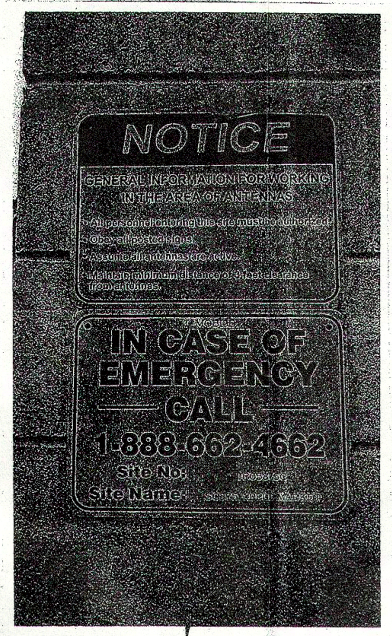

EXHIBIT E

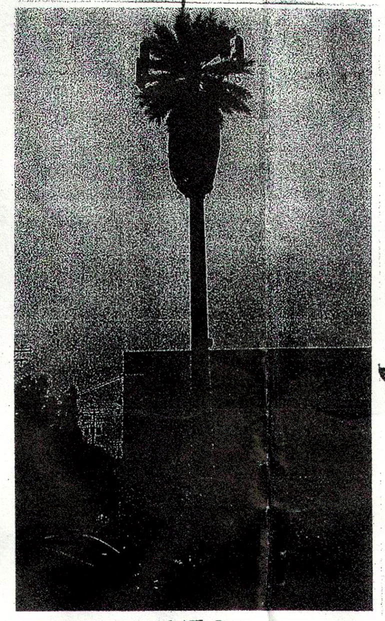

EXHIBIT D

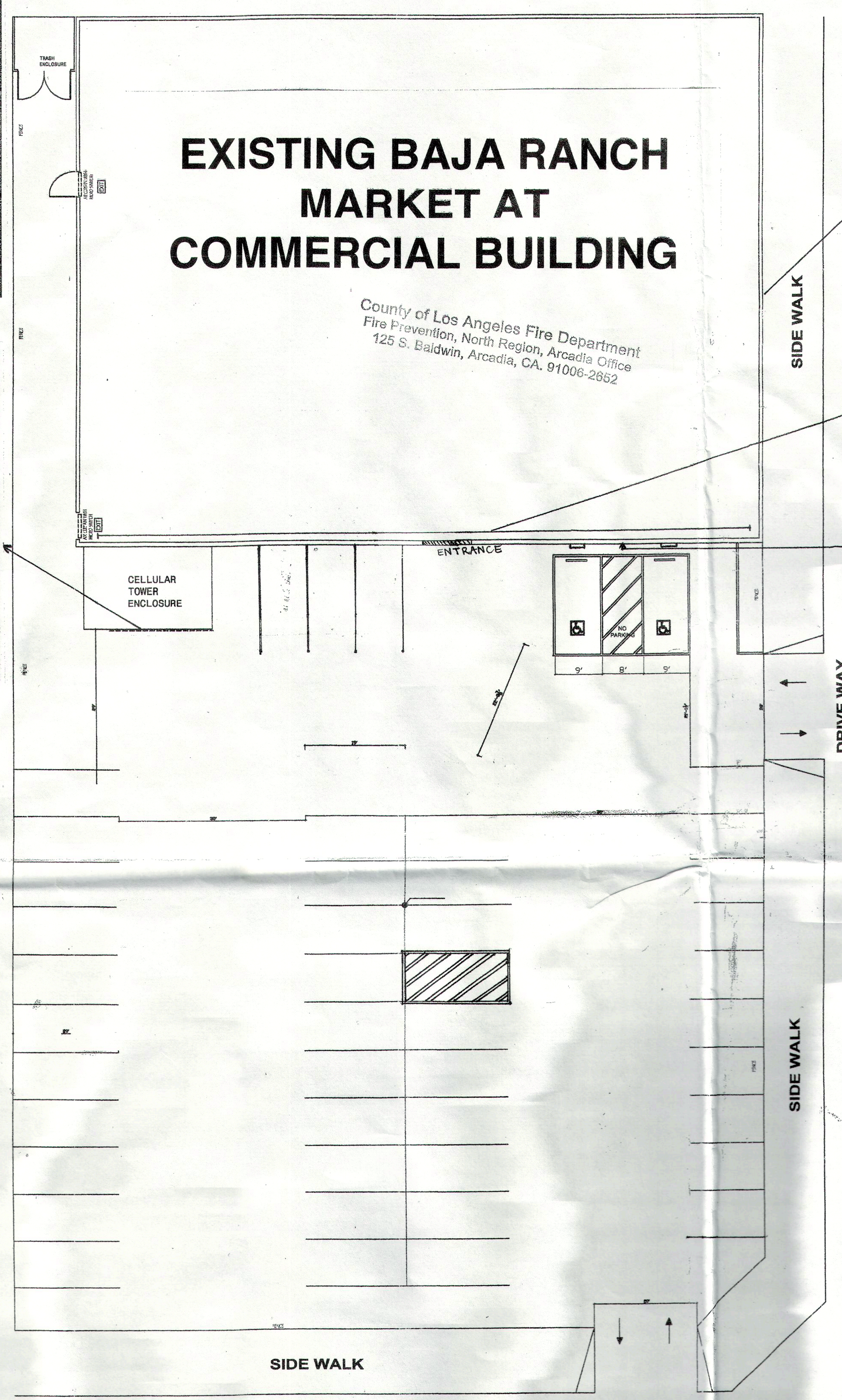

RESIDENTIAL AREA

ALLEY WAY

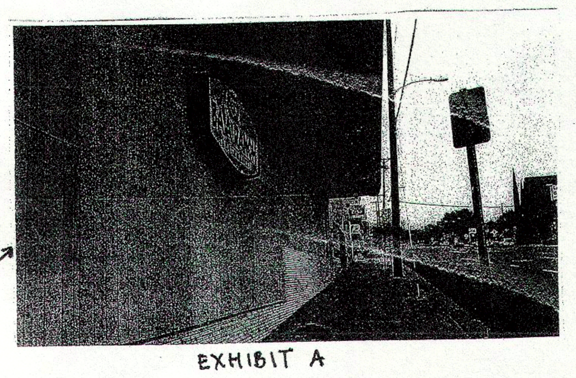

EXHIBIT A

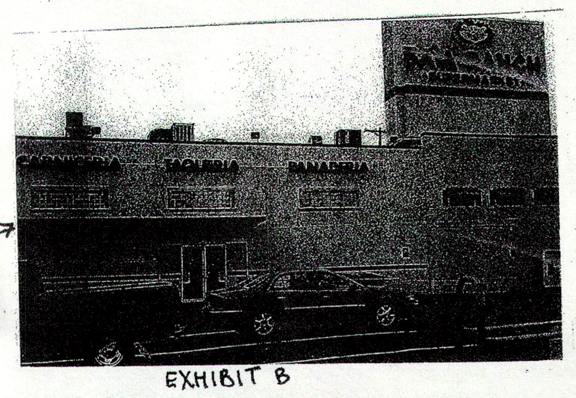

EXHIBIT B

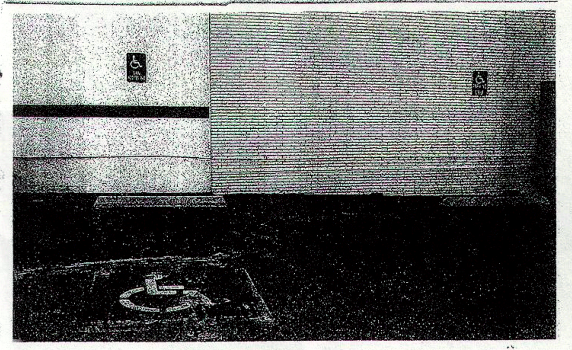

EXHIBIT C

FAIR OAKS AV

VENTURA ST

EXISTING ROOM FINISH SCHEDULE

ROOM OR AREA		FLOOR	FLOOR BASE OR COVE	WALLS	CEILINGS	REMARKS
A	MEAT/DELI/BAKERIE SERVICE AREA	SMOOTH QUARRY TILE	QUARRY TILE OVER 6" HIGH AND 3/8" RADIUS SANITARY COVE BASE	SMOOTH & EASY TO CLEAN APPROVED 6X6 LIGHT COLORED TILE UP THE WALL	SMOOTH & WASHABLE DRYWALL CEILING	
B	SINKS AREA	(E) SMOOTH NON-ABSORBENT DURABLE LIGHT IN COLOR AND EASY TO CLEAN SEALED SMOOTH CONCRETE FLOOR	S3619T SLIMFOOT CERAMIC TILE	SMOOTH & EASY TO CLEAN STAINLESS STEEL AND F.R.P. (FIBER REINFORCED PLASTIC)	SMOOTH & WASHABLE DRYWALL CEILING	
C	WALK-IN COOLER/ FREEZER	(E) SMOOTH NON-ABSORBENT DURABLE LIGHT IN COLOR AND EASY TO CLEAN SEALED CONCRETE FLOOR	STAINLESS STEEL 6" HIGH AND 3/8" RADIUS SANITARY COVE BASE	PRE-FABRICATED STAINLESS STEEL	PRE-FABRICATED STAINLESS STEEL	
D	PRODUCE AREA	COMMERCIAL GRADE SHEET VINYL	6" LINOLEUM COVE BASE	SMOOTH DRYWALL WITH WHITE GLOSS ENAMEL PAINTED	SMOOTH & WASHABLE DRYWALL CEILING	
E	RESTROOM	CERAMIC TILE	CERAMIC TILE OVER 6" HIGH AND 3/8" RADIUS SANITARY COVE BASE	SMOOTH DRYWALL WITH WHITE GLOSS ENAMEL PAINTED	SMOOTH & WASHABLE DRYWALL CEILING	
F	SALES FLOOR AREA	COMMERCIAL GRADE SHEET VINYL	6" LINOLEUM COVE BASE	SMOOTH DRYWALL WITH WHITE GLOSS ENAMEL PAINTED	SMOOTH & WASHABLE DRYWALL CEILING	
G	MEAT PREP. AREA	(E) SMOOTH NON-ABSORBENT DURABLE LIGHT IN COLOR AND EASY TO CLEAN SEALED SMOOTH CONCRETE FLOOR	S3619T SLIMFOOT CERAMIC TILE	SMOOTH & EASY TO CLEAN STAINLESS STEEL AND F.R.P. (FIBER REINFORCED PLASTIC)	SMOOTH & WASHABLE DRYWALL CEILING	
H	OFFICE AREA	COMMERCIAL GRADE SHEET VINYL	6" LINOLEUM COVE BASE	SMOOTH DRYWALL WITH WHITE GLOSS ENAMEL PAINTED	SMOOTH & WASHABLE DRYWALL CEILING	
I	STOREGE AREA ELECTRIC &COMPRESOR ROOM	(E) SMOOTH NON-ABSORBENT DURABLE LIGHT IN COLOR AND EASY TO CLEAN SEALED SMOOTH CONCRETE FLOOR	S3619T SLIMFOOT CERAMIC TILE	SMOOTH DRYWALL WITH WHITE GLOSS ENAMEL PAINTED	SMOOTH & WASHABLE DRYWALL CEILING	

IMPROVEMENT AREA FIXTURE AND EQUIPMENT SCHEDULE

ITEM NUMBER	ITEM / EQUIPMENT	MANUFACTURER	MODEL NUMBER	NSF	GAS CONNECTION	ELECTRICAL	HOT WATER	COLD WATER	DIRECT WASTE	INDIRECT WASTE	COMMENT
1	8' DELI CASE			•							SEE CUT SHEET
2	GRANITE CUSTOM COUNTER/TABLE										
3	STEAM TABLE			•		•					SEE CUT SHEET
4	HOT FOOD CASE	HILL PHOENIX		•		•					SEE CUT SHEET
5	CAKE DISPLAY CASE DRY			•		•					SEE CUT SHEET
6	CAKE DISPLAY CASE COLD			•		•					SEE CUT SHEET
7	32 LINEAR FEET OF FOOD STORAGE RACKS			•							
8	(5)MEAT CASES	HUSSMAN		•		•				•	
9	10' X 4' TYPE I HOOD			•							UL- LISTED
10	4 BURNER STOVE			•	•						
11	36" GRIDDLE			•	•						
12	I BURNER PASTOR TABLE			•	•						
13	EXISTING 14' X 4' HOOD (RELOCATED)			•							

703.2.7 Mounting Height. Characters shall be 48 inches (1220 mm) minimum and 60 inches (1525 mm) maximum above the adjacent floor or ground surface, measured from the baseline of the characters.
703.2.8 Mounting Location. Where a sign containing tactile characters is provided at a door, the sign shall be alongside the door on the latch side. Where a tactile sign is provided at double doors, the sign shall be to the right of the door.
Mounting Location at Doors
Where there is no wall space
on the latch side of a single door, or to the right side of double doors, signs shall be on the nearest adjacent wall. Signs containing tactile characters shall have an 18 inch (455 mm) minimum by 18 inch (455 mm) minimum space on the floor or ground, centered on the sign, beyond the arc of any door swing between the closed position and 45 degree open position.
EXCEPTION: Door-mounted signs shall be permitted on the push side of doors with closers and without hold-open devices.

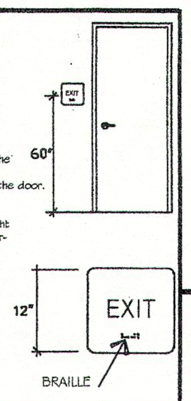

TACTILE EXIT SIGN (TYP.) N.T.S. 6

EXIT DENOTES: SELF ILLUMINATED EXIT SIGN, 1 FOOTCANDLE MININUM AT FLOOR LEVEL (ALT. POWER ILLUMIMATED EXIT SIGN WITH BATTERY BACKUP)

EXIT SIGN N.T.S. 5

1. EXIT SIGNS SHALL BE READILY VISABLE FORM ANY DIRECTION OF APPROACH AND SHALL CLEARLY INDICATE THE DIRECTION OF EGRESS TRAVEL. NO POINT SHALL BE MORE THAN 100 FEET FROMTHE NEAREST VISIBLE SIGN. ALL SIGNS SHALL BE ILLUMINATED AND CONNECTED TO AN EMERGENCY ELECTRICAL SYSTEM

2. EXIT DOORS SHALL BE OPEN ABLE FROM THE INSIDE WITHOUT THE USE OF A KEY OR SPECIAL KNOWLEDGE OR EFFORT (SEC. 1003.3.1.8)

3. PROVIDE A SIGN OVER MAIN EXIT DOOR – THIS DOOR MUST REMAIN UNLOCKED DURING BUSINESS HOURS (SEC. 1003.3.1.8)

EXIT SIGN NOTES

NOTES:
A. MINIMUM 30" X 48" CLEAR SPACE IS PROVIDED IN FRONT OF SINK THAT ALLOWS FORWARD APPROACH. CBC 1115B.9.1
B. REQUIRED CLEAR SPACE ADJOINS OR OVERLAPS AN ACCESSIBLE ROUTE AND EXTENDS 19" MAX. UNDER LAVATORY. CBC 1115B.9.1
C. LAVATORIES ADJACENT TO SIDEWALL SHALL HAVE 18" MIN. FROM WALL TO COUNTER OF LAV. 1504(A)
D. SINK IS A MAXIMUM OF 6-1/2" DEEP.
E. KNEE CLEARANCE UNDER SINK IS A MINIMUM OF 27" HIGH AND 30" WIDE, AND PROVIDES AN ABSOLUTE DEPTH OF 19" UNDERNEATH THE SINK. 4.24.3 FIG. 32
F. DRAIN AND HOT WATER PIPING IS INSULATED OR CONFIGURED TO PREVENT 1504(b) 4.19.4
G. THERE ARE NO SHARP OR ABRASIVE ELEMENTS UNDER SINK. 1504(b) 4.19.4 SELF CLOSING VALVES (MIN. 10 SECOND OPEN FLOW). 1504(c) 4.19.5
H. FAUCETS ARE LEVER TYPE, ELECTRONICALLY ACTIVATED OR APPROVED
I. FAUCETS ARE OPERABLE WITH ONE HAND AND DO NOT REQUIRE TIGHT GRASPING PINCHING OR TWISTING OF THE WRIST 1504(c) 4.27.4
J. 5 LB. MAXIMUM FORCE REQUIRED TO ACTIVATE CONTROLS. 1504(c) 4.27.4
K. MIRROR SHALL BE MOUNTED SO BOTTOM EDGE IS NO HIGHER THAN 40" TO THE FLOOR. CBC 1115B.9.1

ASSESSABLE SINK NOTES

NOTES:
GRAB BARS AT WATER CLOSET
1. ONE AT SIDE 42" LONG EXTENDING 24" IN FRONT OF WATER CLOSET; ONE AT REAR OF WATER CLOSET 36" LONG; BOTH MOUNTED 33" ABOVE FLOOR. (EXCEPTION: REAR GRAB BAR OVER TANK TYPE WATER CLOSER MAY BE UP TO 36" ABOVE FLOOR)
2. BARS SHALL BE 1-1/4" TO 1-1/2" IN DIAMETER WITH 1-1/2" CLEARANCE TO WALL.
3. BAR FASTENERS AND MOUNTING SUPPORT SHALL BE ABLE TO WITHSTAND 250 LBS. POINT LOAD IN BENDING, SHEAR TENSION. ROTATION IN FITTING NOT ALLOWED.
4. SURFACE OF WALL ADJACENT TO GRAB BAR IS TO BE FREE OF SHARP OR ABRASIVE ELEMENTS

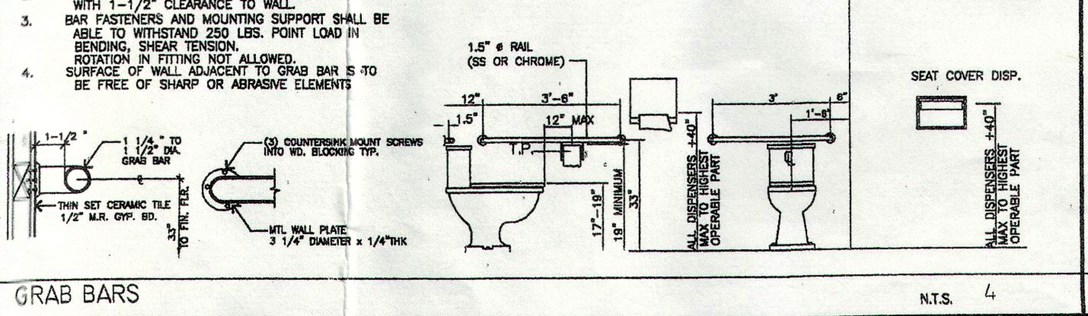

GRAB BARS N.T.S. 4

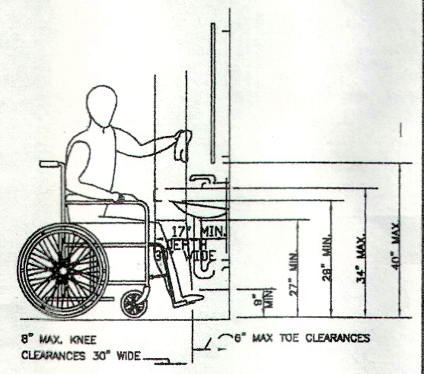

ASSESSABLE SINK DETAIL N.T.S. 3

DOOR/ HARDWARE NOTES:
1.) 10" minimum high smooth surface at push side of door bottom.
2.) 36" door (32" minimum clear)
3.) Height: 6'-8" Min.
4.) Threshold height: 1/2" maximum
5.) Hardware: Lever, push/pull or panic bars mounted 30" -44" high
6.) Maximum door opening effort: 8.5 lb. exterior, 5 lb. interior, and 15 lb fire door.
7.) Hand-activated door opening hardware shall be centered between 30 inches and 44 inches above the floor.

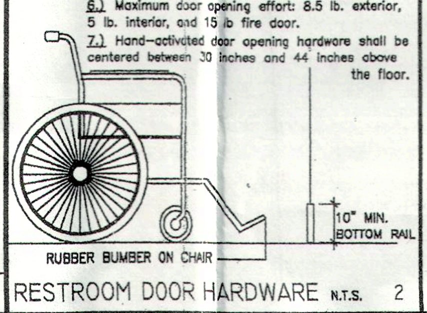

RESTROOM DOOR HARDWARE N.T.S. 2

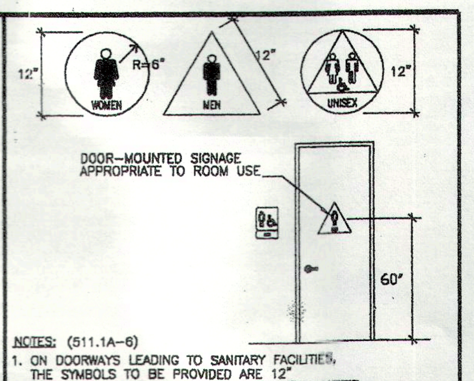

NOTES: (511.1A-6)
1. ON DOORWAYS LEADING TO SANITARY FACILITIES, THE SYMBOLS TO BE PROVIDED ARE 12" EQUILATERAL TRIANGLE FOR MEN, OR 12" DIAMETER CIRCLE FOR WOMEN, 1/4" THICK CENTERED ON DOOR 60" ABOVE FLOOR, CONTRASTING COLOR WITH DOOR.

RESTROOM DOOR SIGNAGE N.T.S. 1

SITE PLAN / FIXTURE & EQUIP. SCHEDULE

CONTRACTOR IS TO VERIFY ALL EXISTING CONDITIONS PRIOR CONSTRUCTION and NOTIFY ENGINEER OF RECORD WITH ANY DISCREPANCIES

1 SCALE: 1/16" = 1'0"

REVISIONS | BY

PROJECT

VH CONTRACTORS
CSL#874774 CLASS "B" EXP. DATE:
AUTHORIZED DESIGNER
1463 RED GUM ST
ANAHEIM, CA 92806
TEL: (714) 632-8188
FAX: (714) 632-8184

BAJA RANCH MARKET

2515 FAIR OAKS AVE
ALTADENA, CA 91001

DRAWING:
SITE PLAN
FIXTURE & ROOM
FINISH SCHEDULES

CHECKED BY:

DATE: 10-20-08

ISSUED FOR:	
REVIEW	
PLAN CHECK	✓
BIDDING	
PERMIT	✓
CONSTRUCTION	
DRAWN BY :	H.R.

SHEET NO.:

A-1

KVM #
CAD FILE
JOB NO.